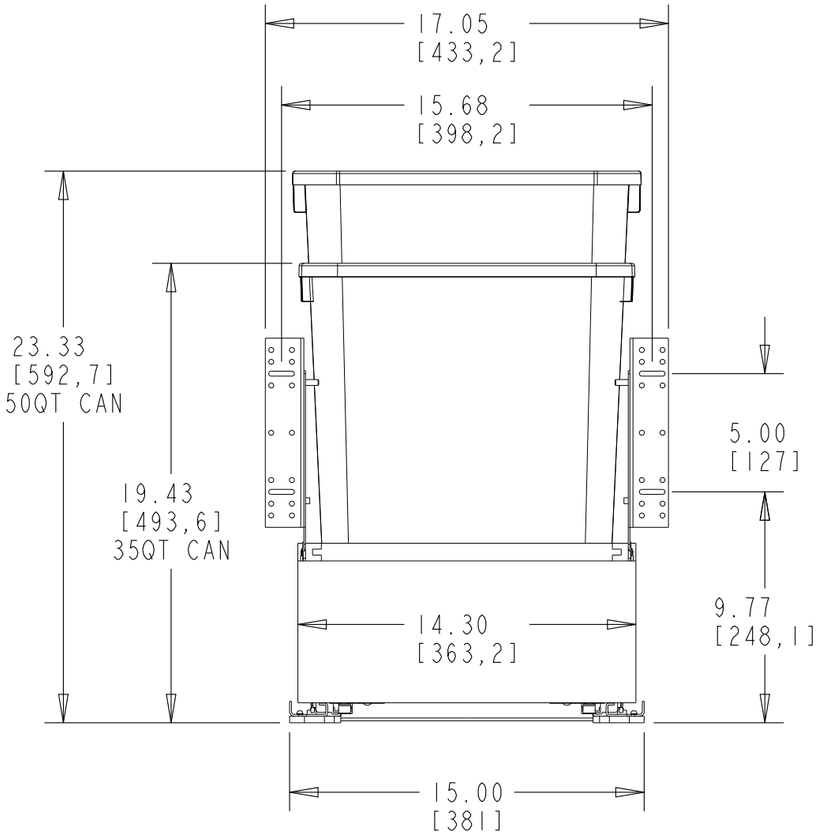

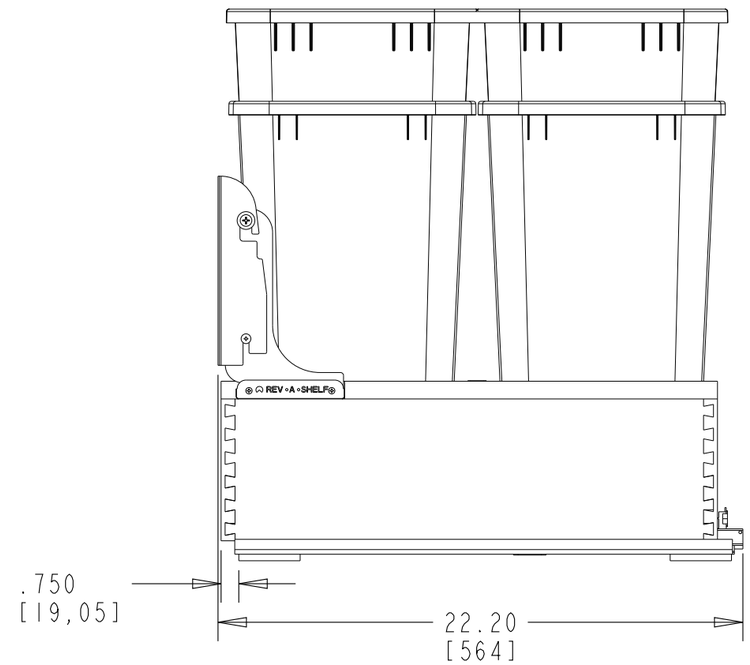

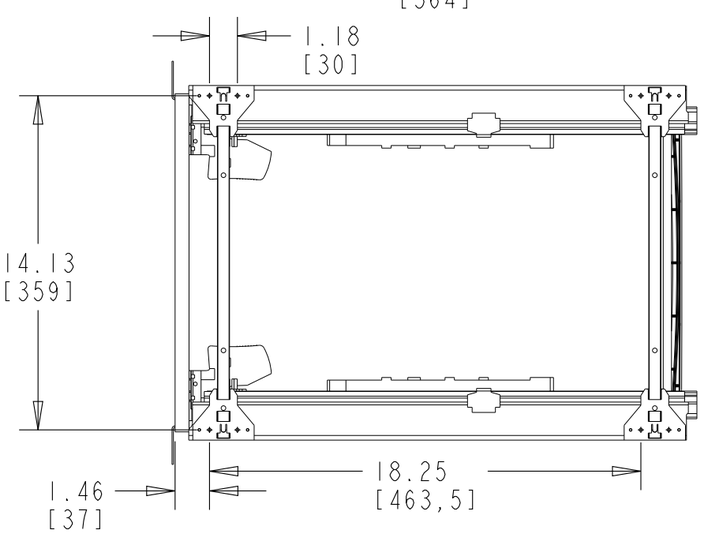

CUSTOMER DRAWING

REV.	DATE	BY	DESCRIPTION OF CHANGE

			BY	DATE	REV-A-SHELF® INC.
INCH [MM]	AMERICAN PROJECTION	DRAWN	KRR	8-1-16	SIZE B — DOUBLE 35/50 QUART WASTE CONTAINER BLUM SOFT CLOSE
TOLERANCES: MAT. DEC. (WOOD) .XX ±.03 [.8mm] (OTHER) .XX ±.02 [.5mm] (ALL) .XXX ±.005 [.13 mm] FRACTIONS ±1/32 [.8 mm]		ANGLES ±1/2°	MATERIAL		DRAWING NO. 4WC-xxDM2-SC — SCALE 0.100
			FINISH		PART NO. 4WC-xxDM2-SC — SHEET 1 OF 2

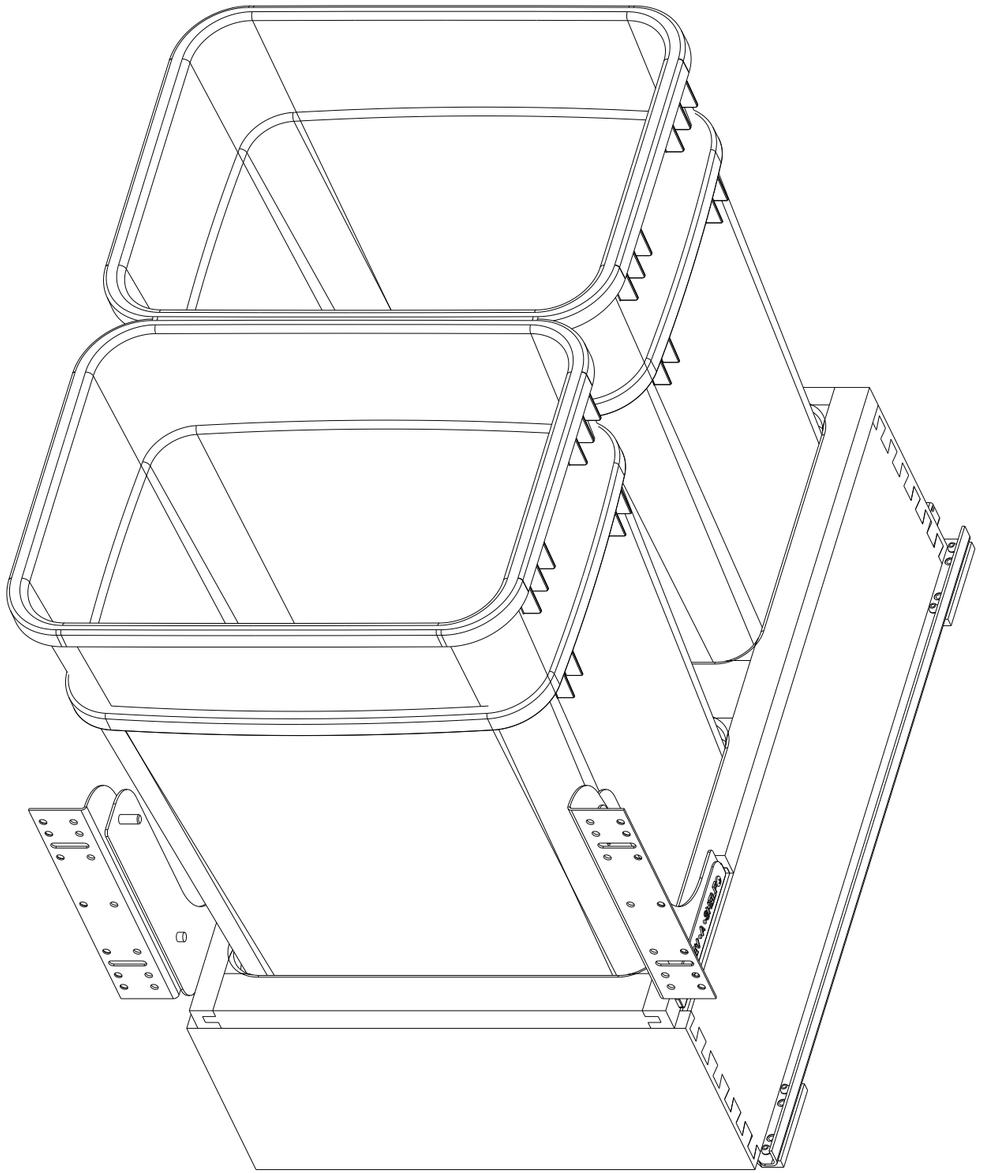

NOTE: HEIGHT DEPENDS ON CAN.
35 QT = 20.50 MIN.
50 QT = 24.50 MIN.

PART DIMENSIONS		
	MIN	MAX
WIDTH	15.00	
DEPTH	22.20	
HEIGHT	19.43	23.33
CONTAINTER CAPACITY	35 OR 50	
CONTAINER UOM	QUART	

MIN CABINET OPENING	
WIDTH	15.00
DEPTH	22.25
HEIGHT	SEE NOTE

PRODUCT MAX WEIGHT RATING

SLIDE SPECIFICATIONS				
SLIDE TYPE	UNDERMOUNT	SLIDE EXTENSION	.75 OT	MAX WEIGHT RATING
SLIDE CLOSING	SOFT	SLIDE LENGTH	21.00	
SLIDE MOUNTING	BOTTOM	SLIDE FINISH	ZINC	100 LB

CUSTOMER DRAWING

REV.	DATE	BY	DESCRIPTION OF CHANGE

INCH [MM] — AMERICAN PROJECTION

	BY	DATE
DRAWN	KRR	8-1-16

TOLERANCES
MAT. DEC.
(WOOD) .XX ±.03 [.8mm]
(OTHER) .XX ±.02 [.5mm]
(ALL) .XXX ±.005 [.13 mm]
FRACTIONS ±1/32 [.8 mm]
ANGLES ±1/2°

REV-A-SHELF®, INC.

SIZE B — DOUBLE 35/50 QUART WASTE CONTAINER BLUM SOFT CLOSE

MATERIAL

FINISH

DRAWING NO. 4WC-xxDM2-SC — SCALE 0.250

PART NO. 4WC-xxDM2-SC — SHEET 2 OF 2