PROGRESS LIGHTING™

AirPro®

Ceiling Fan Installation Manual

P2582

93089935_C

Limited Lifetime Warranty

Progress Lighting fan motors are warranted to the original purchaser to be free of electrical and/or mechanical defects for so long as the original purchaser owns the fan. Pull chain switches, reverse switches, capacitors and metal finishes are warranted to be free from defects in materials or workmanship for a period of 1 year from the date of purchase. Warping of wooden or plastic blades is not covered by this warranty nor is corrosion and/or deterioration of any finishes for fans installed within ten miles of any sea coast. Extended warranties for ENERGY STAR® qualified products may apply.

Progress Lighting ceiling fans with built-in LED light sources, when properly installed and under normal conditions of use, are warranted to be free from defects in material and workmanship which cause the light sources to fail to operate in accordance with the specifications for (i) five (5) years from the date of purchase on the LED Light modules and electrical components for fans used in single family residences, and (ii) three (3) years from the date of purchase on the LED Light modules and electrical components for fans used in multi-family or commercial applications. LED bulbs supplied by Progress Lighting carry no warranty other than manufacturer's warranty. Non-LED bulbs carry no warranty.

With proof of purchase, the original purchaser may return the defective fan to the place of purchase during the first 30 days for replacement. After 30 days, the original purchaser MUST contact Progress Lighting at (864) 678-1000 for repair or replacement which shall be determined in Progress Lighting's sole discretion and shall be purchaser's sole and exclusive remedy.

Labor and Shipping Excluded. This warranty does not cover any costs or fees associated with the labor (including, but not limited to, electrician's fees) required to install, remove, or replace a fan or any fan parts.

This warranty shall not apply to any loss or damage resulting from (i) normal wear and tear or alteration, misuse, abuse or neglect, or (ii) improper installation, operation, repair or maintenance by original purchaser or a third party, including without limitation improper voltage supply or power surge, use of improper parts or accessories, unauthorized repair (made or attempted) or failure to provide maintenance to the fan.

THE FOREGOING WARRANTIES STATE PROGRESS LIGHTING'S ENTIRE WARRANTY OBLIGATION AND ORIGINAL PURCHASER'S SOLE AND EXCLUSIVE REMEDY RELATED TO SUCH PRODUCTS. PROGRESS LIGHTING IS NOT RESPONSIBLE FOR DAMAGES (INCLUDING INDIRECT, SPECIAL, INCIDENTIAL OR CONSEQUENTIAL), DUE TO PRODUCT FAILURE, WHETHER ARISING OUT OF BREACH OF WARRANTY, BREACH OF CONTRACT, OR OTHERWISE. THIS WARRANTY IS GIVEN IN LIEU OF ALL OTHER WARRANTIES, WHETHER EXPRESSED OR IMPLIED, INCLUDING THOSE OF MERCHANTABILITY, FITNESS FOR A PARTICULAR PURPOSE OR NONINFRINGEMENT.

Some states do not allow limitations on how long an implied warranty lasts or the exclusion or limitations of incidental or consequential damages, so the above limitations and exclusions may not apply to you. This warranty gives you specific rights and you may have other rights which vary from state to state.

Date Purchased_____

Store Purchased_____

Model No. P2582

Serial No._____

Vendor No. 109226

UPC
- ☐ 785247221523
- ☐ 785247221530
- ☐ 785247221547

PROGRESS LIGHTING™

Safety Rules.....1.
Unpacking Your Fan .....2.
Installing Your Fan .....3.
Installing the Light Kit.....9.
Operating Your Transmitter .....10.
Care of Your Fan .....11.
Troubleshooting .....12.
Specifications .....13.

Table of Contents

1. To reduce the risk of electric shock, insure electricity has been turned off at the circuit breaker or fuse box before beginning.

2. All wiring must be in accordance with the National Electrical Code and local electrical codes. Electrical installation should be performed by a qualified licensed electrician.

3. **WARNING:** To reduce the risk of electrical shock and fire, do not use this fan with any solid-state fan speed control device.

4. **WARNING:** To reduce the risk of fire, electric shock, or personal injury, mount to outlet box marked "Acceptable for Fan Support of 15.9 kg (35 lbs.) Or Less" and use mounting screws provided with the outlet box. Most outlet boxes commonly used for the support of light fixtures are not acceptable for fan support and may need to be replaced. Due to the complexity of the installation of this fan, a qualified licensed electrician is strongly recommended.

WARNING
TO REDUCE THE RISK OF FIRE, ELECTRIC SHOCK OR PERSONAL INJURY, MOUNT FAN TO OUTLET BOX MARKED ACCEPTABLE FOR FAN SUPPORT.

5. The outlet box and support structure must be securely mounted and capable of reliably supporting a minimum of 35 lbs (15.9 kg) or less. Use only UL-listed outlet boxes marked **FOR FAN SUPPORT.**

6. The fan must be mounted with a minimum of 7 ft (2.1m) clearance from the trailing edge of the blades to the floor.

7. To operate the reverse function on this fan, press the reversing button while the fan is running.

8. Avoid placing objects in the path of the blades.

9. To avoid personal injury or damage to the fan and other items, be cautious when working around or cleaning the fan.

10. Do not use water or detergents when cleaning the fan or fan blades. A dry dust cloth or lightly dampened cloth will be suitable for most cleaning.

11. After making electrical connections, spliced conductors should be turned upward and pushed carefully up into the outlet box. The wires should be spread apart with the grounded conductor and the equipment-grounding conductor on one side of the outlet box.

12. Electrical diagrams are for reference only. Light kits that are not packed with the fan must be UL Listed and marked suitable for use with the model fan you are installing. Switches must be UL General Use Switches. Refer to the Instructions packaged with the light kits

WARNING
TO REDUCE THE RISK OF PERSONAL INJURY, DO NOT BEND THE BLADE ARMS (ALSO REFERRED TO AS BRACKETS) DURING ASSEMBLY OR AFTER INSTALLATION. DO NOT INSERT OBJECTS IN THE PATH OF THE BLADES.

NOTE
READ AND SAVE ALL INSTRUCTIONS!

1. Safety Rules

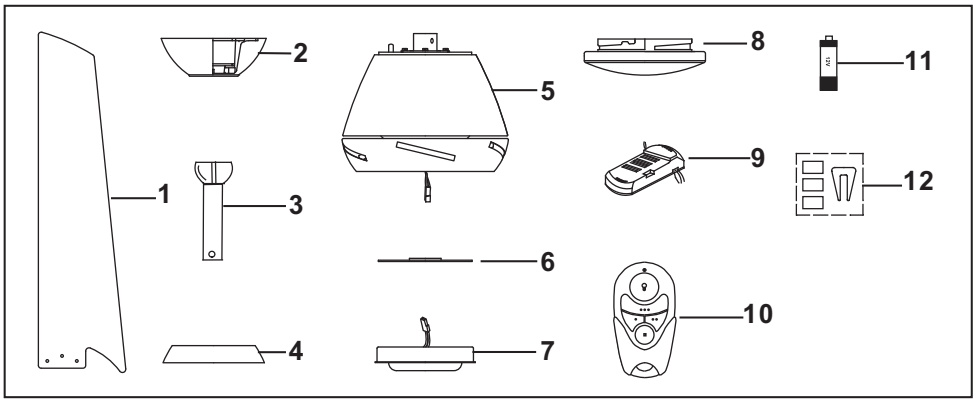

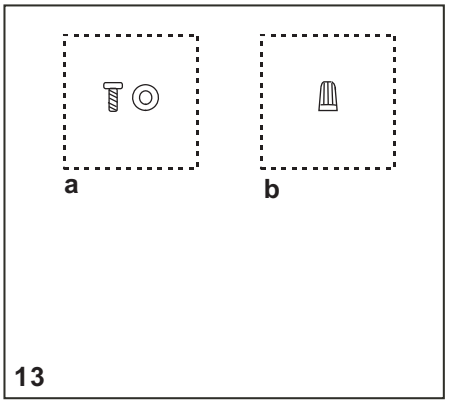

Unpack your fan and check the contents. You should have the following items:

1. Fan blades (5)
2. Canopy assembly
3. Ball/downrod assembly
4. Coupling cover
5. Fan motor assembly
6. Mounting plate
7. 18W LED light kit
8. Glass shade
9. Receiver with 6 wire nuts
10. Transmitter incl. 2 mounting screws
11. 12V Battery
12. Balancing kit

13. Loose parts bag containing:

a. Blade attachment hardware
(16 screws, 16 fiber washers)
b. Mounting hardware
Wire nuts (3)

Unpacking Your Fan 2.

Tools Required

Phillips screw driver, straight slot screw driver, adjustable wrench, step ladder, and wire cutters.

Mounting Options

If there isn't an existing UL listed mounting box, then read the following instructions. Disconnect the power by removing fuses or turning off circuit breakers.

Secure the outlet box directly to the building structure. Use appropriate fasteners and building materials. The outlet box and its support must be able to fully support the moving weight of the fan (at least 35 lbs). Do not use plastic outlet boxes.

WARNING
TO REDUCE THE RISK OF FIRE, ELECTRIC SHOCK, OR OTHER PERSONAL INJURY, MOUNT FAN ONLY TO AN OUTLET BOX MARKED ACCEPTABLE FOR FAN SUPPORT AND USE THE MOUNTING SCREWS PROVIDED WITH THE OUTLET BOX. OUTLET BOXES COMMONLY USED FOR THE SUPPORT OF LIGHTING FIXTURES MAY NOT BE ACCEPTABLE FOR FAN SUPPORT AND MAY NEED TO BE REPLACED. CONSULT A QUALIFIED ELECTRICIAN IF IN DOUBT.

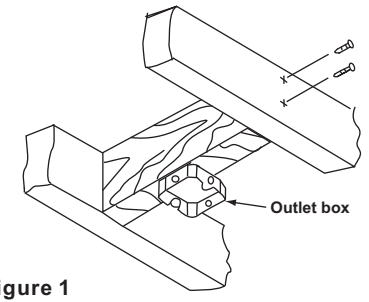

Figure 1

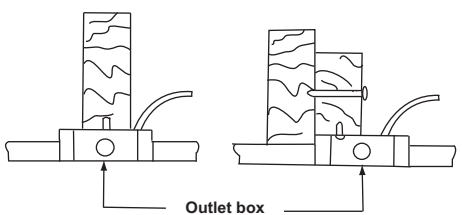

Figure 2

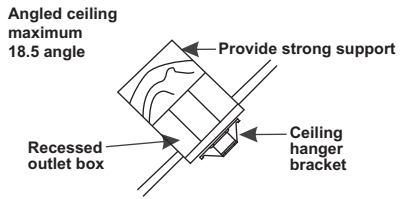

Figure 3

Note: You may need a longer downrod to maintain proper blade clearance when installing on a steep, sloped ceiling.

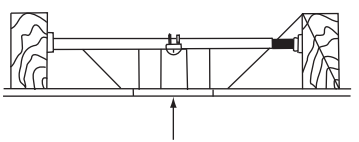

Figure 4

To hang your fan where there is an existing fixture but no ceiling joist, you may need an installation hanger bar as shown in Figure 4 (available at your Progress Lighting Retailer).

3. Installing Your Fan

Attaching the Fan Blades

NOTE: Your fan blades are reversible. Select the blade side finish which best accentuates your decor.

Step 1. Remove the top fan housing from the motor by removing the six collar mounting screw with lock washer on the top fan housing. (Fig. 5)

Step 2. Insert the blade through the blade slot in the decorative housing. Align the holes in blade and blade arm, making sure the holes are also aligned and secure with fiber washers and screws provided. Repeat process with other blades. (Fig. 6)

Step 3. After all the blades are securely fastened to the motor, replace the fan housing and support plate to the motor and fasten the top fan housing with the six collar mounting screw with lock

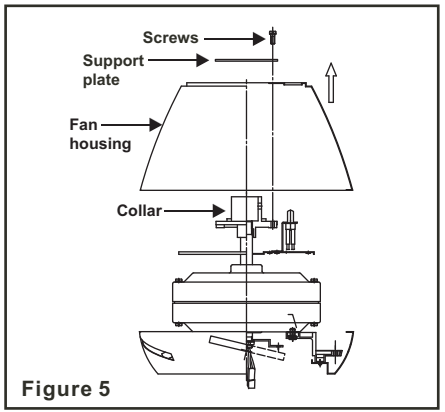

Figure 5

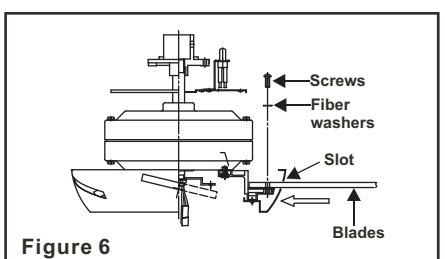

Figure 6

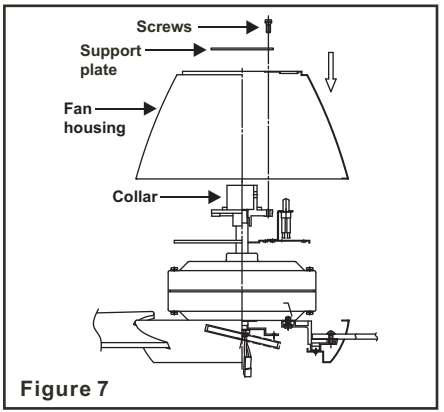

Figure 7

Hanging the Fan

REMEMBER to turn off the power. Follow the steps below to hang your fan properly:

Step 1. Remove the decorative canopy bottom cover from the canopy by turning the cover counter clockwise.(Fig. 8)

Step 2. Remove the mounting bracket from the canopy by removing the 1 of 2 screws from the bottom of the mounting bracket and loosening the other one a half turn from the screw head. Next, turn the canopy counter clockwise to removing the mounting bracket from the canopy. (Fig. 8)

Step 3. Pass the 120-volt supply wires through the center hole in the ceiling hanger bracket as shown in Fig. 9.

Step 4. Secure the hanger bracket to the ceiling outlet box with the screws and washers provided with your outlet box.

Step 5. Remove the hanger pin, lock pin and set screws from the top of the motor assembly.

Step 6. Route wires exiting from the top of the fan motor through the coupling cover, canopy cover, canopy and then through the ball / downrod. (Fig. 10)

Step 7. Align the holes at the bottom of the downrod with the holes in the collar on top of the motor housing (Fig. 10). Carefully insert the hanger pin through the holes in the collar and downrod. Be careful not to jam the pin against the wiring inside the downrod. Insert the locking pin through the hole near the end of the hanger pin until it snaps into its locked position, as noted in the circle inset of Fig. 10.

WARNING
FAILURE TO PROPERLY INSTALL LOCKING PIN AS NOTED IN STEP 7 COULD RESULT IN FAN LOOSENING AND POSSIBLY FALLING.

Step 8. Tighten two set screws on top of the fan motor firmly. (Figure 10)

Step 9. Place the downrod ball into the hanger bracket socket.

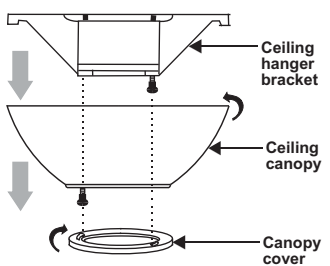

Figure 8

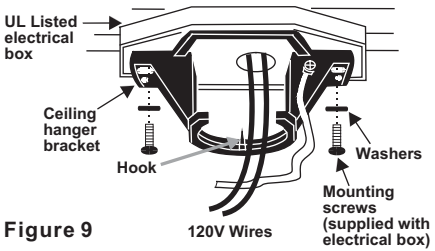

Figure 9

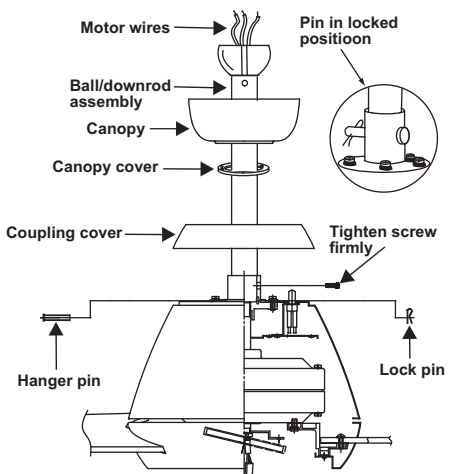

Figure 10

Make the Electric Connections

WARNING: To avoid possible electrical shock, be sure electricity is turned off at the main fuse box before wiring.

NOTE: This remote control unit is equipped with 16 code combinations to prevent possible interference from or to other remote units. The frequency switches on your receiver and transmitter have been preset at the factory. Please recheck to make sure the switches on the transmitter and the receiver are set to the same position, any combination of settings will operate the fan as long as the transmitter and receiver are set to the same position. (Figure 11)

Step 1. (Figure 12) Insert the receiver into the mounting bracket with the flat side of the receiver facing the ceiling.

Step 2. (Fig. 13) Motor to Receiver Electrical Connections: Connect the Black wire from the fan to Black wire marked "TO MOTOR L". Connect the White wire from the fan to the White wire marked "TO MOTOR N" from the receiver. Connect the Blue wire from the fan to the Blue wire marked "For Light" from the receiver. Secure wire connections with the plastic wire nuts provided.

Step 3. (Figure 13) Receiver to House Supply Wires Electrical Connections: Connect the black (hot) wire from the ceiling to the black wire marked "AC in L" from the receiver. Connect the white (neutral) wire from the ceiling to the white wire marked "AC in N" from the Receiver. Secure the wire connections with the plastic wire nuts provided.

Step 4. (Figure 13) If your outlet box has a ground wire (green or bare copper) connect it to the fan ground wires; otherwise connect the hanging bracket ground wire to the mounting bracket. Secure the wire connection with a plastic nut provided. After connecting the wires spread them apart so that the green and white wires are on one side of the outlet box and black and blue wires are on he other side. Carefully tuck the wire connections up into the outlet box.

NOTE: Fan must be installed at a maximum distance of 20 feet from the transmitting unit for proper signal transmission between the transmitting unit and the fan's receiving unit.

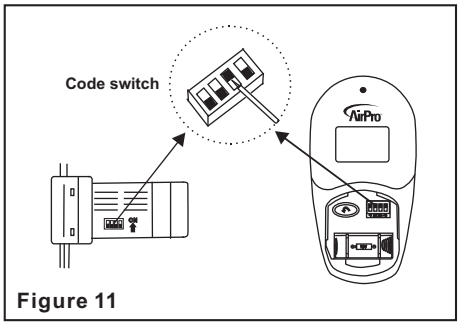

Figure 11

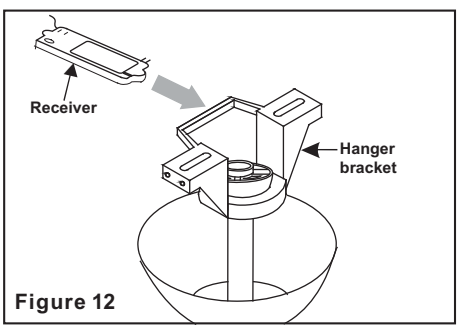

Figure 12

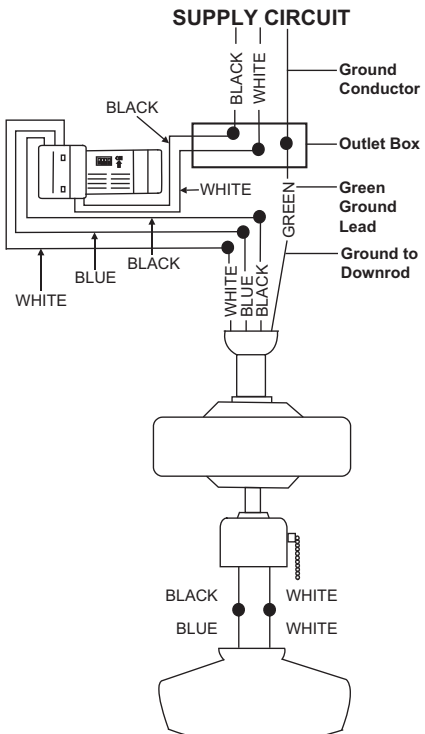

Figure 13

Finishing the Installation

Step 1. Tuck connections neatly into ceiling outlet box.

Step 2. Slide the canopy up to mounting bracket and place the key hole on the canopy over the screw on the mounting bracket, turn canopy until it locks in place at the narrow section of the key holes. (Fig. 14)

Step 3. Align the circular hole on canopy with the remaining hole on the mounting bracket, secure by tightening the two set screws. **Note:** Adjust the canopy screws as necessary until the canopy and canopy cover are snug.

WARNING
Make sure the notch on the hanging bracket properly sits in the groove in the hanger ball before attaching the canopy to the bracket by turning the housing until it drops into place.

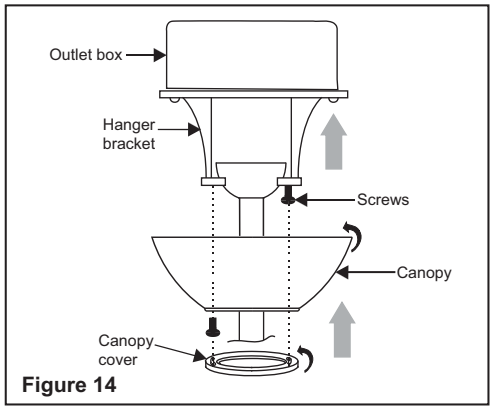

Figure 14

Blade Balancing

All blades are grouped by weight. Because natural woods very in density, the fan may wobble even though the blades are weighed equally.

The following procedure should correct most fan wobbling problems. Check after each step.

1. Check that all blade and blade arm screws are secure.

2. Most fan wobbling problems are caused when blade levels are unequal. Check this level by selecting a point on the ceiling above the tip of one of the blades. Measure this distance as shown in Figure 15. Rotate the fan until the next blade is positioned for measurement. Repeat for each blade. The distance deviation should be equal within 1/8".

3. Use the enclosed Blade Balancing Kit if the blade wobble is still noticeable.

4. If the blade wobble is still noticeable, interchanging two adjacent (side by side) blades can redistribute the weight and possibly result in smoother operation.

WARNING
TO REDUCE THE RISK OF PERSONAL INJURY, DO NOT BEND THE BLADE HOLDERS WHILE INSTALLING, BALANCING THE BLADES, OR CLEANING THE FAN. DO NOT INSERT FOREIGN OBJECTS BETWEEN ROTATING FAN BLADES.

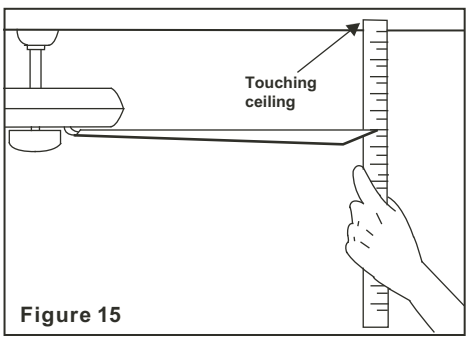

Figure 15

Installing the Mounting Plate

Step 1. Remove 1 of the 3 screws from the mounting ring and loosen the other 2 screws. (Do not remove)

Step 2. Place the key holes on the mounting plate over the 2 screws previously loosened from the mounting ring, turn mounting plate until it locks in place at the narrow section of the key holes. Secure by tightening the 2 screws previously loosened and the one previously removed. (Fig. 16)

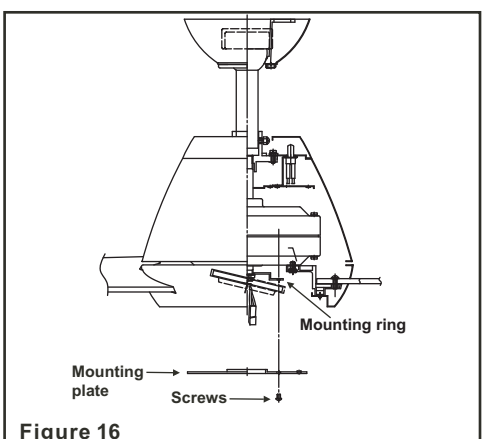

Figure 16

CAUTION: Before starting installation, disconnect the power by turning off the circuit breaker or removing the fuse at fuse box. Turning power off using the fan switch is not sufficient to prevent electric shock.

Step 1. Remove the 1 of 3 screws from the posts of the mounting plate and keep it for future use. Loosen the other 2 screws. (Do not remove) (Fig. 17)

Step 2. While holding the LED light kit under your fan, make the polarized plug connections:
- White to white
- Black to blue

Step 3. Place the key holes in the LED light kit over the two screws previously loosened from the mounting plate. Turn the LED light kit until the LED light kit locks in place at the narrow section of the key holes. (Fig. 17)

Step 4. Securely tighten the two light kit mounting screws previously loosened and the one previously removed. (Fig. 17)

Step 5. Raise glass shade up against the LED light kit, and secure it to fan by turning light kit shade clockwise until snug. DO NOT OVERTIGHTEN. (Fig. 17)

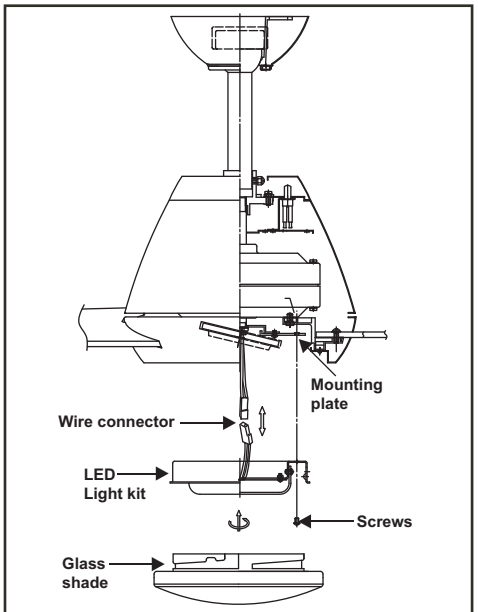

Figure 17

Installing the battery

Install 12V battery (included), to prevent damage to transmitter, remove the battery if not used for long periods.

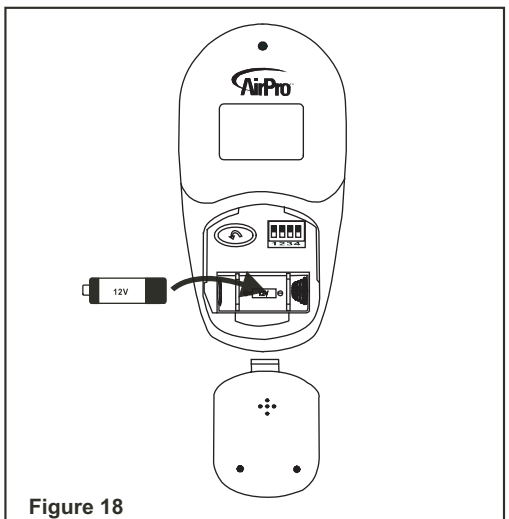

Figure 18

9. Installing the Light Kit

Restore power to ceiling fan and test for proper operation.

1. "●,●●,●●●" buttons:
These three buttons are used to set the fan speed as follows:
● = Low speed
●● = Medium speed
●●● = High speed

2. " ■ " button:
This button turns the fan off.

3. The " 💡 " button turns the light ON or OFF and also controls the brightness setting. Press and release the button to turn the light ON or OFF. Press and hold the button to set the desired brightness. The light key has an auto-resume, it will stay at the same brightness as the last time it was turned off.

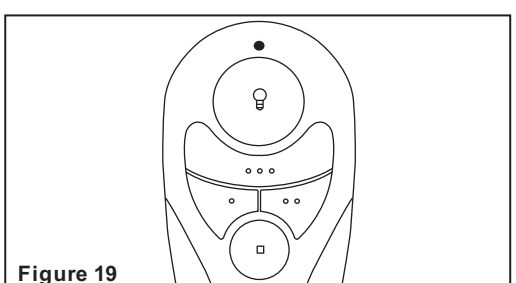

Figure 19

The Reverse switch is located on the motor housing. Slide the switch to the Left for warm weather operation. Slide the switch to the Right for cool weather operation.

NOTE: Wait for fan to stop before changing the setting of the slide switch.

Speed settings for warm or cool weather depend on factors such as the room size, ceiling height, number of fans, etc.

Warm weather - (Forward) A downward air flow creates a cooling effect as shown in Figure 20. This allows you to set your air conditioner on a higher setting without affecting your comfort.

Cool weather - (Reverse) An upward airflow moves warm air off the ceiling area as shown in Figure 21. This allows you to set your heating unit on a lower setting without affecting your comfort.

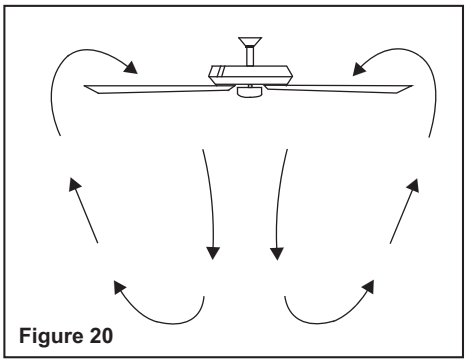

Figure 20

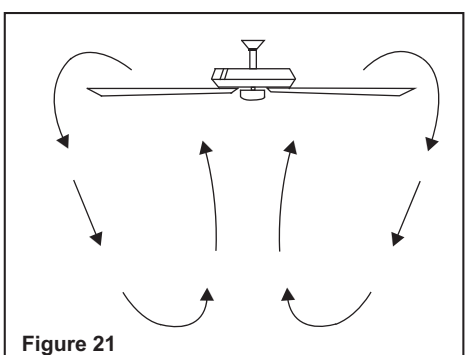

Figure 21

Here are some suggestions to help you maintain your fan

1. Because of the fan's natural movement, some connections may become loose. **Check the support connections, brackets, and blade attachments twice a year.** Make sure they are secure. **(It is not necessary to remove fan from ceiling.)**

2. Clean your fan periodically to help maintain its new appearance over the years. Use only a soft brush or lint-free cloth to avoid scratching the finish. The plating is sealed with a lacquer to minimize discoloration or tarnishing. Do not use water when cleaning. This could damage the motor, or the wood, or possibly cause an electrical shock.

3. You can apply a light coat of furniture polish to the wood blades for additional protection and enhanced beauty. Cover small scratches with a light application of shoe polish.

4. **There is no need to oil your fan.** The motor has permanently lubricated bearings.

IMPORTANT
MAKE SURE THE POWER IS OFF AT THE ELECTRICAL PANEL BOX BEFORE YOU ATTEMPT ANY REPAIRS. REFER TO THE SECTION "MAKING ELECTRICAL CONNECTIONS"

11. Care of Your Fan

Problem	Solution
Fan will not start.	1. Check circuit fuses or breakers. 2. Check line wire connections to the fan and switch wire connections in the switch housing. **CAUTION:** Make sure main power is off. 3. Check to make sure the dip switches from the transmitter and receiver are set to the same frequency.
Fan sounds noisy.	1. Make sure all motor housing screws are snug. 2. Make sure the screws that attach the fan blade bracket to the motor hub is tight. 3. Make sure wire nut connections are not rubbing against each other or the interior wall of the switch housing. **CAUTION:** Make sure main power is off. 4. Allow a 24-hour "breaking-in" period. Most noise associated with a new fan disappear during this time. 5. If using an optional light kit, make sure the screws securing the lampshade are tight. Check that light bulb is also secure. 6. Some fan motors are sensitive to signals from solid-state variable speed controls. If you have installed this type of control, choose and install another type of control. 7. Make sure the upper canopy is a short distance from the ceiling. It should not touch the ceiling.
Remote control malfunction	1. Do not connect the fan with wall mounted variable speed control (s). 2. Make sure the dip switches are set correctly.

Fan Size	Speed	Volts	Amps	Watts	RPM	CFM	N.W.	G.W.	C.F.
54"	Low	120	0.235	12.67	63	1929.71	18.52 lbs	21.47 lbs	2.17'
	High	120	0.55	65.49	164	5279.32			

These are approximate measures. They do not include Amps and Wattage used by the light kit.

This device complies with part 15 of the FCC Rules. Operation is subject to the following two conditions: (1) This device may not cause harmful interference, and (2) this device must accept any interference received, including interference that may cause undesired operation.

Warning: Changes or modifications to this unit not expressly approved by the party responsible for compliance could void the user's authority to operate the equipment.

NOTE: This equipment has been tested and found to comply with the limits for a Class B digital device, pursuant to Part 15 of the FCC Rules. These limits are designed to provide reasonable protection against harmful interference in a residential installation. This equipment generates, uses and can radiate radio frequency energy and, if not installed and used in accordance with the instructions, may cause harmful interference to radio communications.

However, there is no guarantee that interference will not occur in a particular installation. If this equipment does cause harmful interference to radio or television reception, which can be determined by turning the equipment off and on, the user is encouraged to try to correct the interference by one or more of the following measures:
- Reorient or relocate the receiving antenna.
- Increase the separation between the equipment and receiver.
- Connect the equipment into an outlet on a circuit different from that to which the receiver is connected.
- Consult the dealer or an experienced radio/TV technician for help.

13. Specifications

©2020 Progress Lighting, Inc.
701 Millennium Blvd.,
Greenville, SC 29607
All Rights Reserved