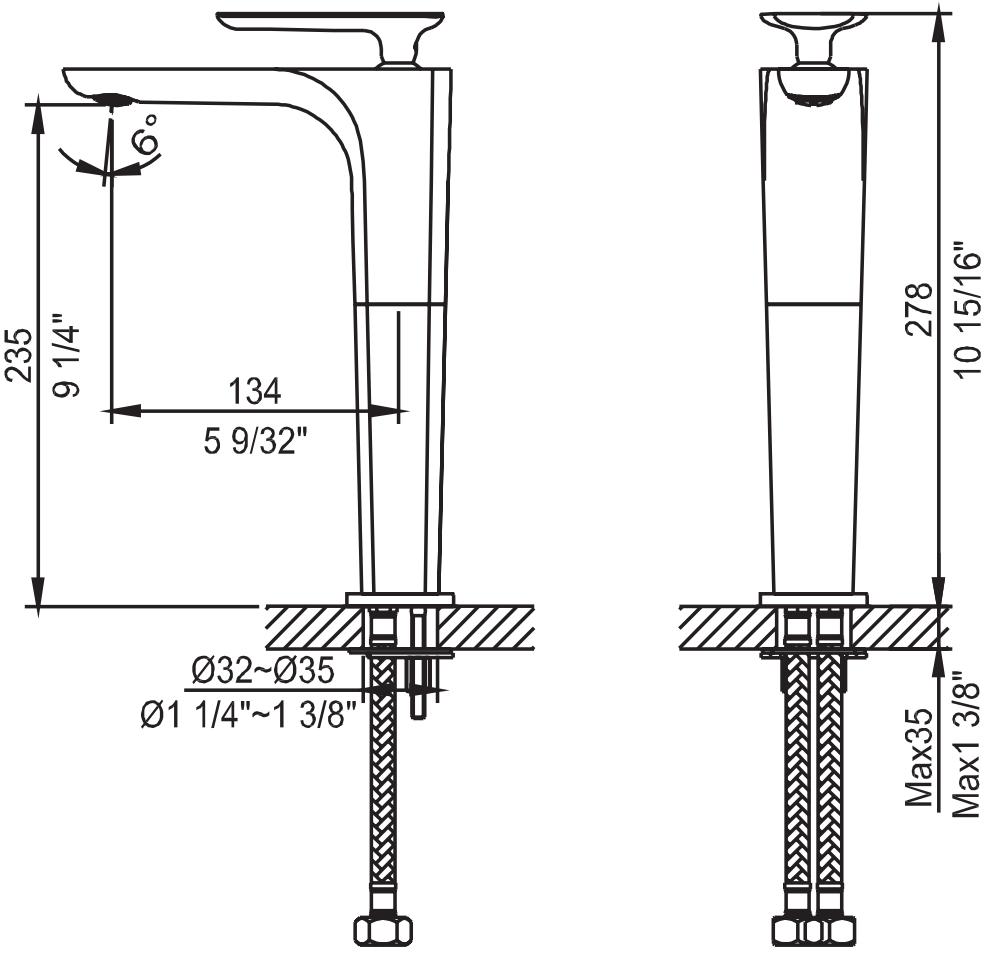
6°
235
9 1/4"
134
5 9/32"
Ø32~Ø35
Ø1 1/4"~1 3/8"
278
10 15/16"
Max35
Max1 3/8"