PARTS LIST / LISTE DES PIÈCES / LISTA DE PARTES
ITEM NO. / ARTICLE NO. / ARTíCULO NO.: DS-D052-680-288-2
DESCRIPTION / LA DESCRIPTION / DESCRIPCIóN
Mid Century Click Sofa / Canapé clic du milieu du siècle / Sofá Click Mid Century

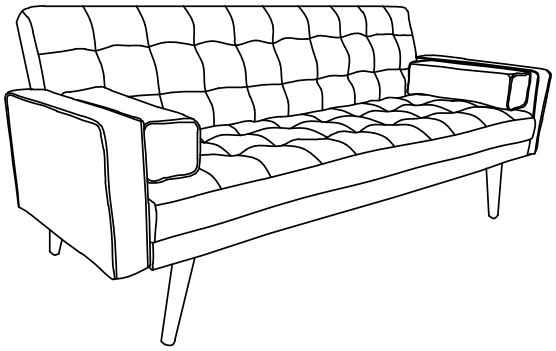

Please note that wrinkles in the fabric of back cushions/pillows is normal due to packaging. These will decrease over time, but you may want to smooth them by hand to speed the process. Do not use solvents of any kind.

Ⓐ 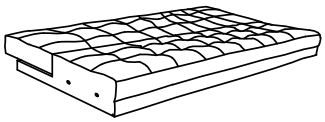 x1 MAIN BODY OF SOFA x1 CORPS PRINCIPAL DU CANAPÉ x1 CUERPO PRINCIPAL DEL SOFÁ	Ⓑ 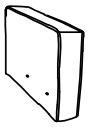 x1 ARMREST RIGHT * x1 CANAPé BRAS DROIT x1 BRAZO DERECHO SOFá	Ⓒ 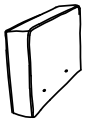 x1 ARMREST LEFT * x1 CANAPé BRAS GAUCHE x1 BRAZO IZQUIERDO SOFá
Ⓓ 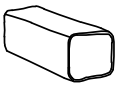 x2 PILLOW * x2 COUSSIN CANAPé x2 ALMOHADA DE SOFá	Ⓔ x2 FRONT LEG * x2 JAMBE AVANT x2 PATA DELANTERA	Ⓕ x3 CENTER & BACK LEG * x3 JAMBE CENTRALE ET ARRIèRE x3 PIERNA CENTRAL Y TRASERA
Ⓖ x3 PLASTIC WASHER * x3 RONDELLE EN PLASTIQUE x3 ARANDELA PLáSTICA	Ⓗ x4 BOLT 5/16" X 2" * x4 BOULON 5/16" X 2" x4 PERNO 5/16 "X 2"	Ⓘ x8 BOLT 5/16" X 1" * x8 BOULON 5/16" X 1" x8 PERNO 5/16 "X 1"
Ⓙ x12 FLAT WASHER * x12 RONDELLE PLATE x12 ARANDELA PLANA	Ⓚ x12 SPRING WASHER * x12 RONDELLE à RESSORT x12 ARANDELA DE RESORTE	Ⓛ x1 ALLEN KEY, M5 * x1 CLE ALLEN M5 x1 LLAVE ALLEN, M5

* Replaceable Part

Residential use only

Made in Vietnam / Fabriqué au Vietnam / Hecho en Vietnam
For further assembly information, please go to www.myfurnitureinstructions.com

ASSEMBLY INSTRUCTIONS / INSTRUCTION DE MONTAGE / INSTRUCCIONES DE MONTAJE
ITEM NO. / ARTICLE NO. / ARTíCULO NO.: DS-D052-680-288-2
DESCRIPTION / LA DESCRIPTION / DESCRIPCIóN:
Mid Century Click Sofa / Canapé clic du milieu du siècle / Sofá Click Mid Century

STEP 1: Remove the Right & Left Arms (B&C) from the underside of the sofa seat.

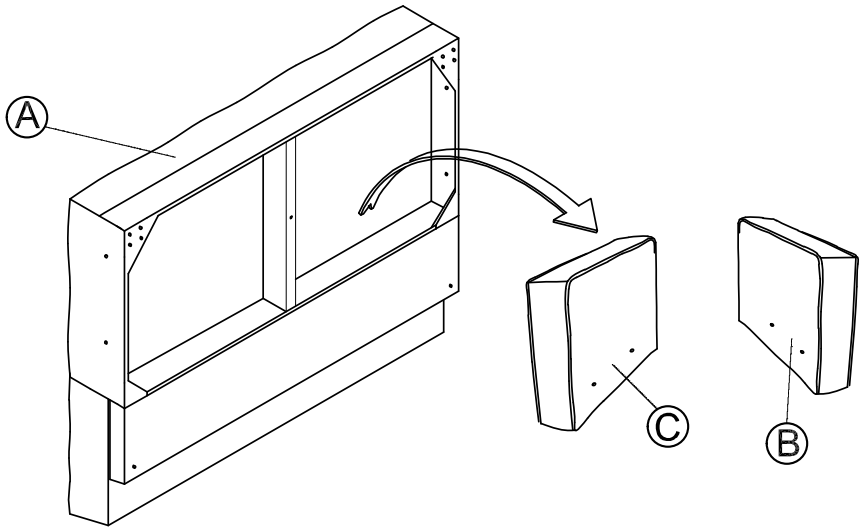

STEP 2: Align the holes of the right and left arms (B&C) with the holes in the sides of the main body of the sofa (A). Add spring washer (K) to long bolt (H). Then add flat washer (J) to the bolt. Insert the bolts and turn clockwise using the Allen Wrench (L). Two bolts with washers will be used for each arm.

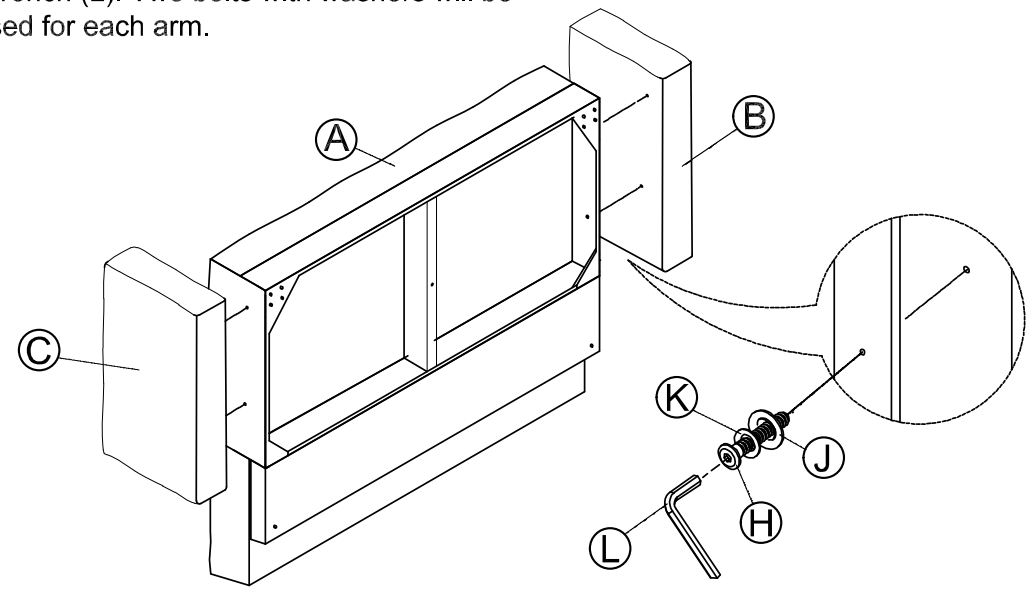

* Replaceable Part

Residential use only

Made in Vietnam / Fabriqué au Vietnam / Hecho en Vietnam
For further assembly information, please go to www.myfurnitureinstructions.com

STEP 3: Add spring washer (K) to short bolt (I). Then add flat washer (J). Attach the front legs (E) to the base of the sofa using four bolts and washers for each leg. The front legs should be positioned so that the angle faces out. Add the plastic washers (G) to the back & center legs. Insert the legs into the pre-drilled holes and turn clockwise until tight.

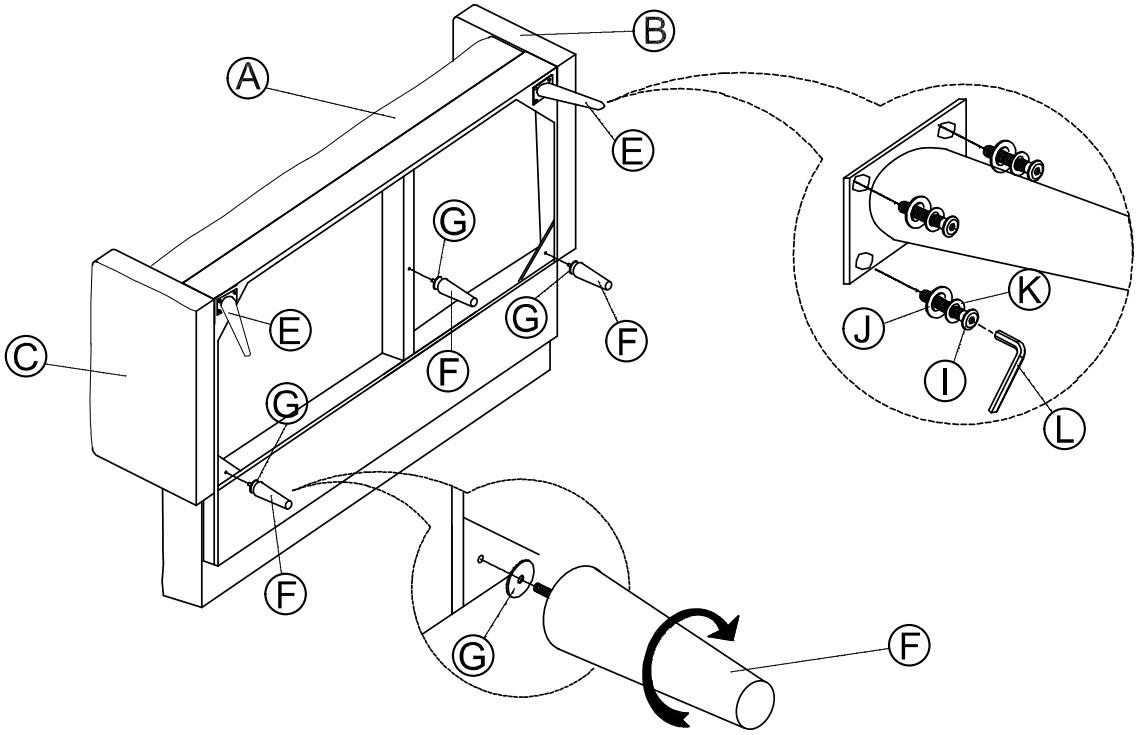

STEP 4:

Turn the assembled sofa upright onto it's legs and raise the back panel to complete assembly.

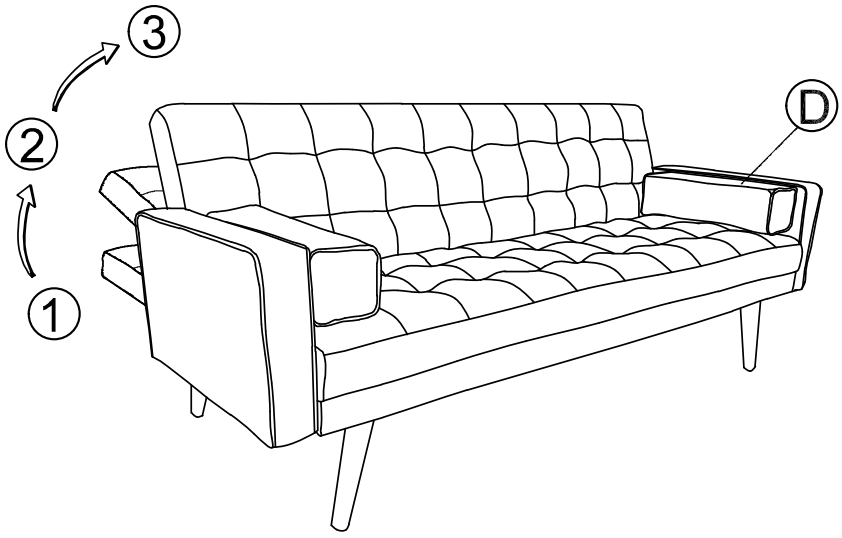

* Replaceable Part

Residential use only

Made in Vietnam / Fabriqué au Vietnam / Hecho en Vietnam
For further assembly information, please go to www.myfurnitureinstructions.com

REPLACEABLE PART / PIèCE REMPLACABLE / PIEZA REEMPLAZABLE
ITEM NO. / ARTICLE NO. / ARTíCULO NO.: DS-D052-680-288-2
DESCRIPTION / LA DESCRIPTION / DESCRIPCIóN
Mid Century Click Sofa / Canapé clic du milieu du siècle / Sofá Click Mid Century

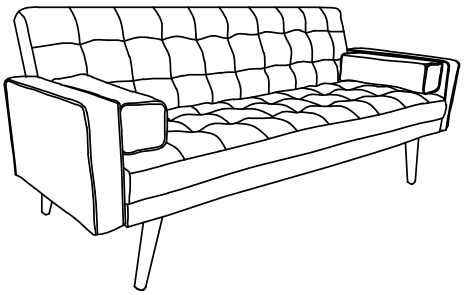

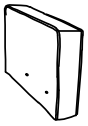

RD052-680-288-2-AR *
x 1 ARMREST RIGHT
x 1 CANAPé BRAS DROIT
x 1 BRAZO DERECHO SOFá

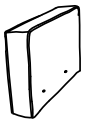

RD052-680-288-2-AL *
x 1 ARMREST LEFT
x 1 CANAPé BRAS GAUCHE
x 1 BRAZO IZQUIERDO SOFá

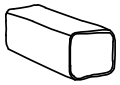

RD052-680-288-2-PI *
x 2 PILLOW
x 2 COUSSIN CANAPé
x 2 ALMOHADA DE SOFá

RD052-680-288-2-FL *
x 2 FRONT LEG
x 2 JAMBE AVANT
x 2 PATA DELANTERA

RD052-680-288-2-CL *
x 3 CENTER & BACK LEG
x 3 JAMBE CENTRALE ET ARRIèRE
x 3 PIERNA CENTRAL Y TRASERA

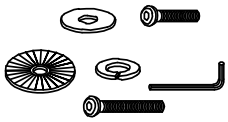

RD052-680-288-2-HK *
x 1 HARDWARE KIT
x 1 KIT DE QUINCAILLERIE
x 1 KIT DE HARDWARE

RD052-680-288-2-FT *
x 5 FLOOR TACK
x 5 CROCHET DE SOL
x 5 PISO TACK

Residential use only

* Replaceable Part

Made in Vietnam / Fabriqué au Vietnam / Hecho en Vietnam
For further assembly information, please go to www.myfurnitureinstructions.com