Southwire®

SPECIFICATION SHEET

ROMEX® BRAND SMARTBOX™ LOW VOLTAGE 2 GANG BOX

RoHS

FEATURES:

- Leveling tab feature allows for easy alignment to adjacent box.
- Heavy-duty mounting screws supplied.
- Mounts to wood or 25 gauge metal stud.
- 3/4" to 1" snap-out conduit adapter swings outward to a 90 degree locking position.
- Same box mounts in a horizontal or vertical position.
- All 6/32 device holes are threaded.

TYPE OF INSTALLATION: New Work & Old Work

CERTIFICATIONS: RoHS Compliant

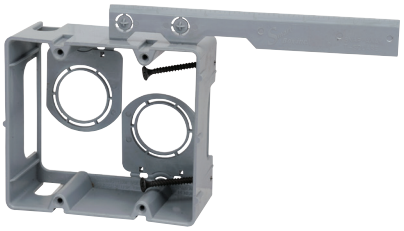

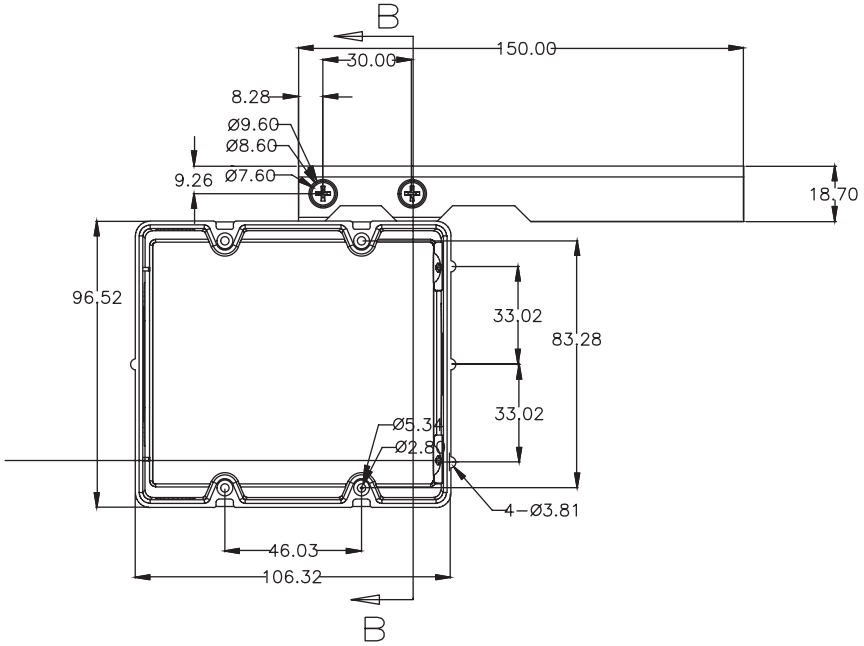

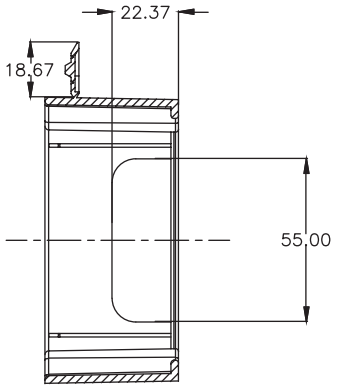

SECTION B–B

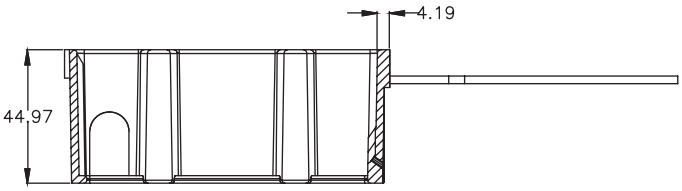

MODEL#	MATERIAL	UPC	I2OF5	MASTER QTY	TRADE SIZE	VOLUME
MSBLV2G	PVC	784297017834	50784297017839	50	2 Gang	N/A

ITEM HEIGHT	ITEM WIDTH	ITEM DEPTH	ITEM WEIGHT	MASTER HEIGHT	MASTER WIDTH	MASTER DEPTH	MASTER WEIGHT
3.80 in.	4.19 in.	1.77 in.	0.21 lbs.	9.50 in.	8.75 in.	23.13 in.	10.65 lbs.

BUILT FOR DURABILITY.
BUILT FOR RELIABILITY.
BUILT FOR WORK.™

1-855-798-6657 | SOUTHWIRE.COM

©2021 Southwire Company, LLC. All rights reserved.
®/TM - ®Registered Trademark and ™Trademark of Southwire Company, LLC