KDS332291DBN

Stainless Steel Self-Rimming Double Bowl Kitchen Sink, 1 Hole, (L)33" X (W)22-1/16" X (D)9-1/8"
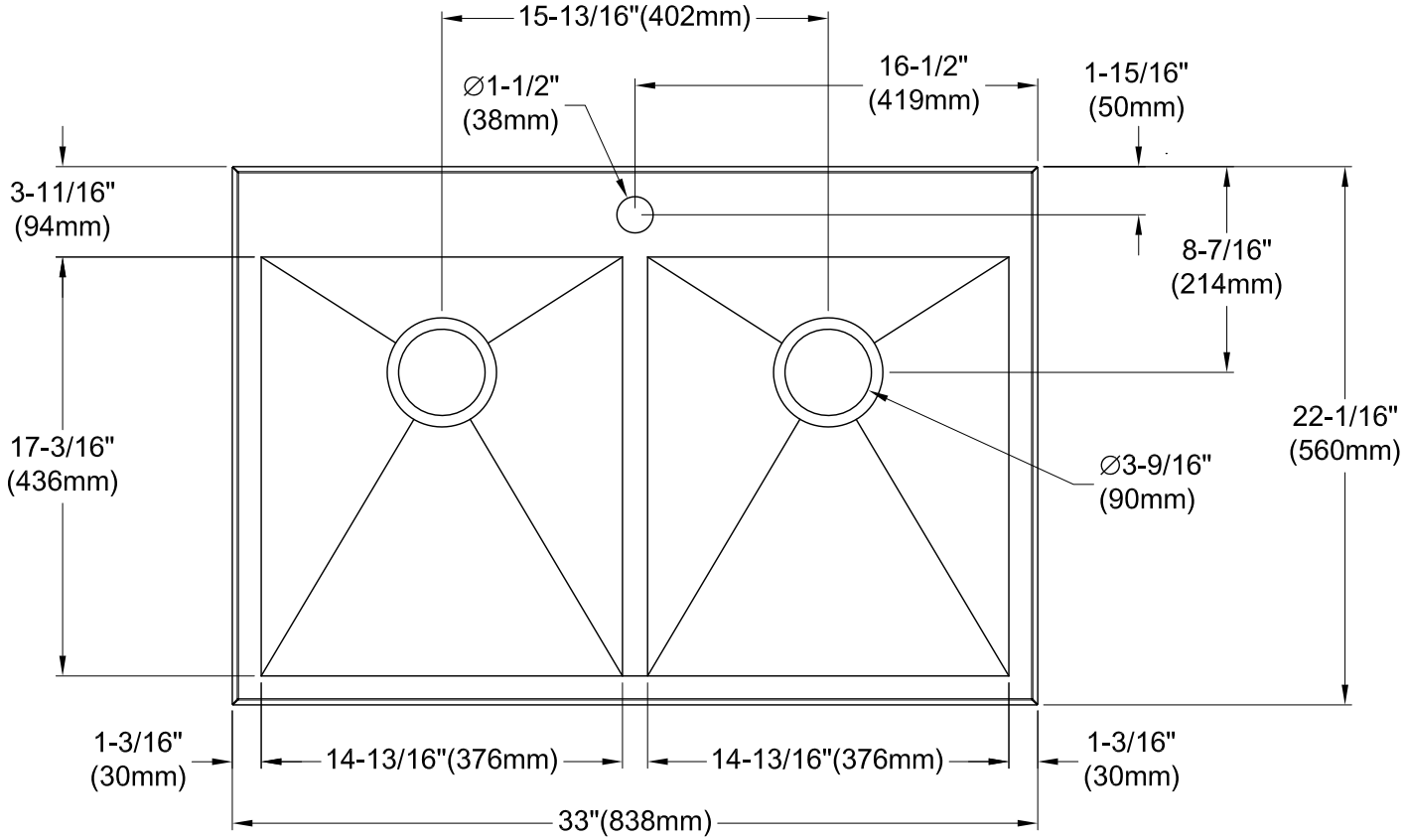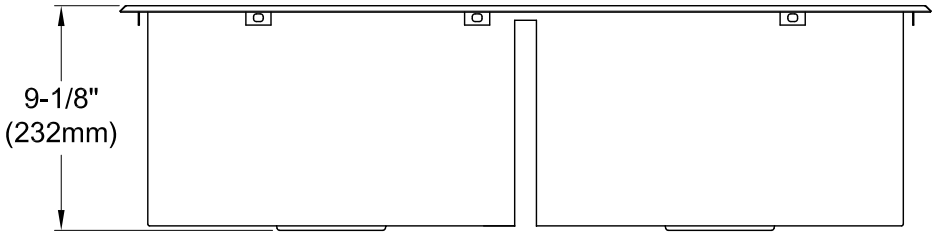
Depth	SS Type	Thickness
9-1/8"	18-10 304 Grade	1.05mm(18G)