Voltaire

Alcove Bathtub

SM-AB556

FEATURES:

- Easy-to-clean, high-gloss finish
- Fiberglass reinforced acrylic
- Integrated flange
- 3-Sided flange
- Built-in apron
- Left-hand drain

INSTALLATION:

Three-wall alcove

COLORS & FINISHES:

☐ White: SM-AB556

INCLUDED PARTS:

- Alcove Bathtub: SM-AB556

SPECIFICATIONS:
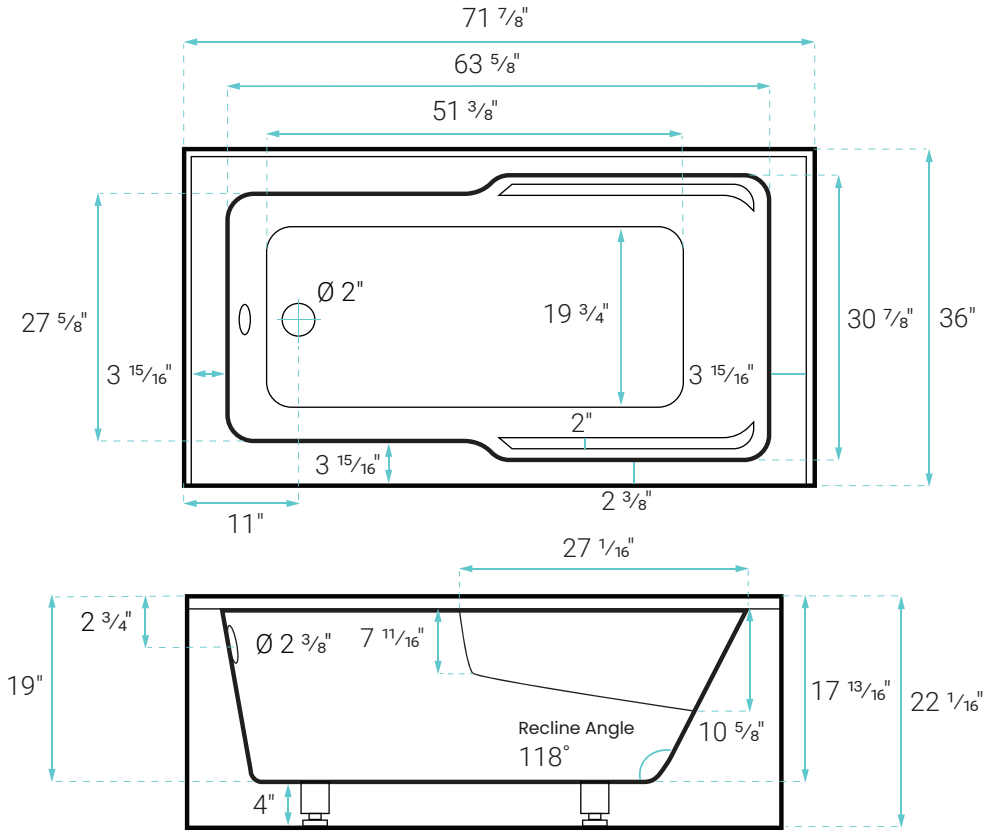
N.W: 79.3 lb.
L: 71 7/8" x W: 36" x H: 22 1/16"
Soaking Depth: 15"