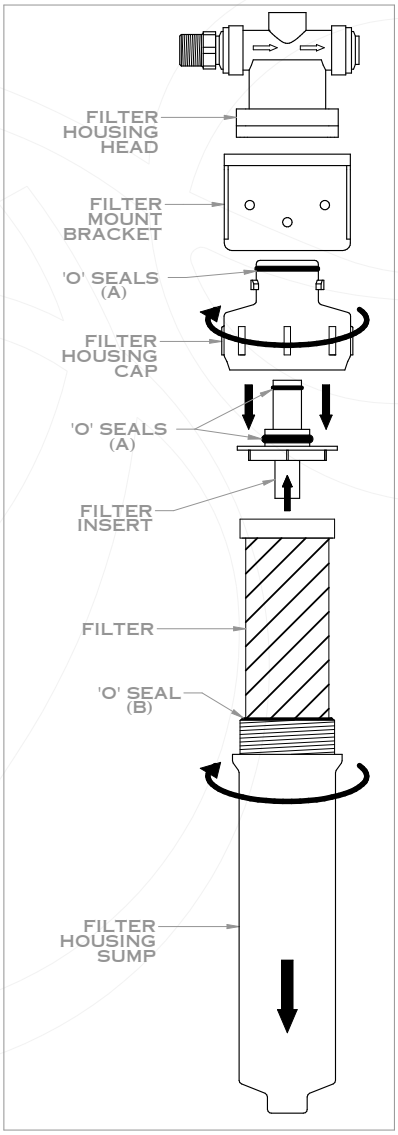
FILTER HOUSING HEAD
FILTER MOUNT BRACKET
'O' SEALS (A)
FILTER HOUSING CAP
'O' SEALS (A)
FILTER INSERT
FILTER
'O' SEAL (B)
FILTER HOUSING SUMP