KB751,2,5,6,8,00SP
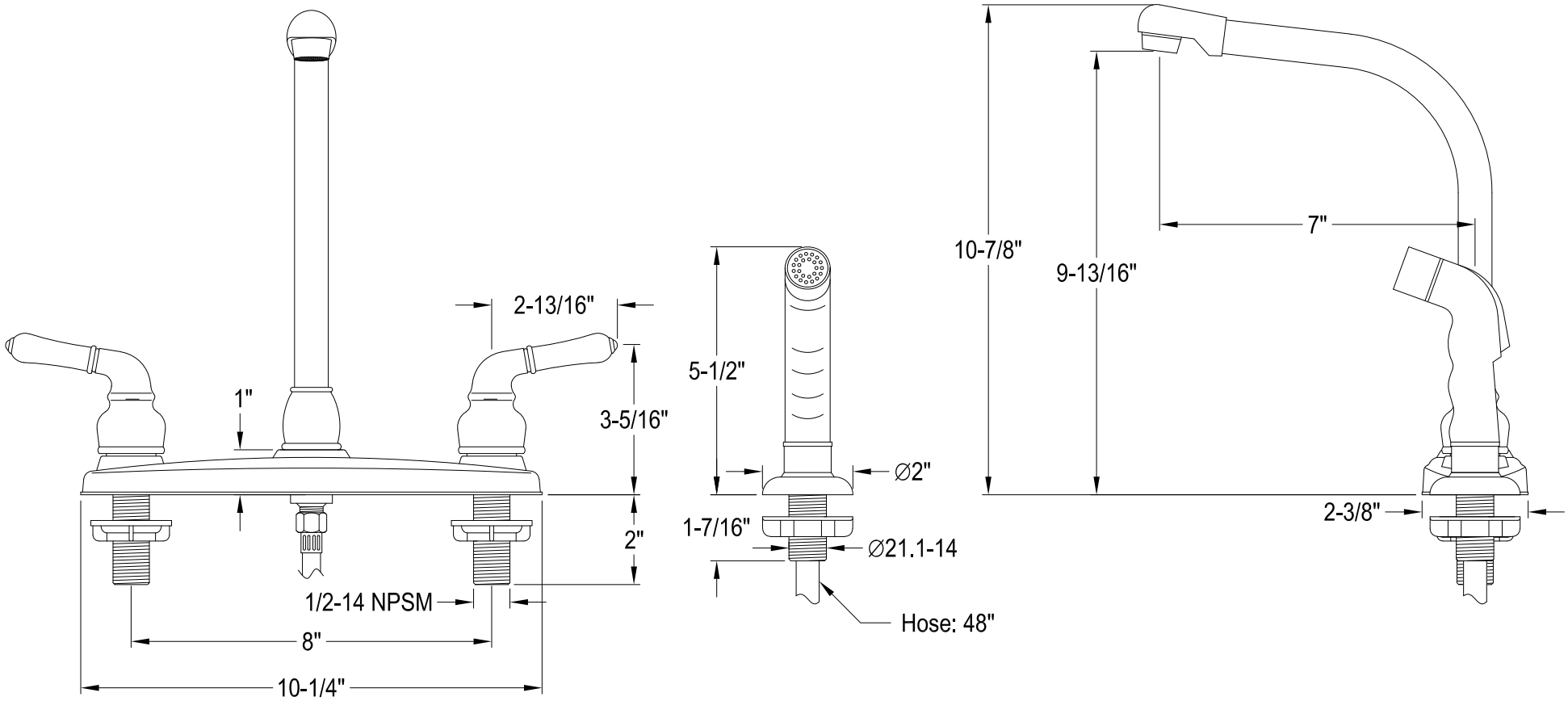
Twin Handles 8" Centerset Kitchen Faucet With Sprayer