KS7120,1,2,3,5,7,8WLL
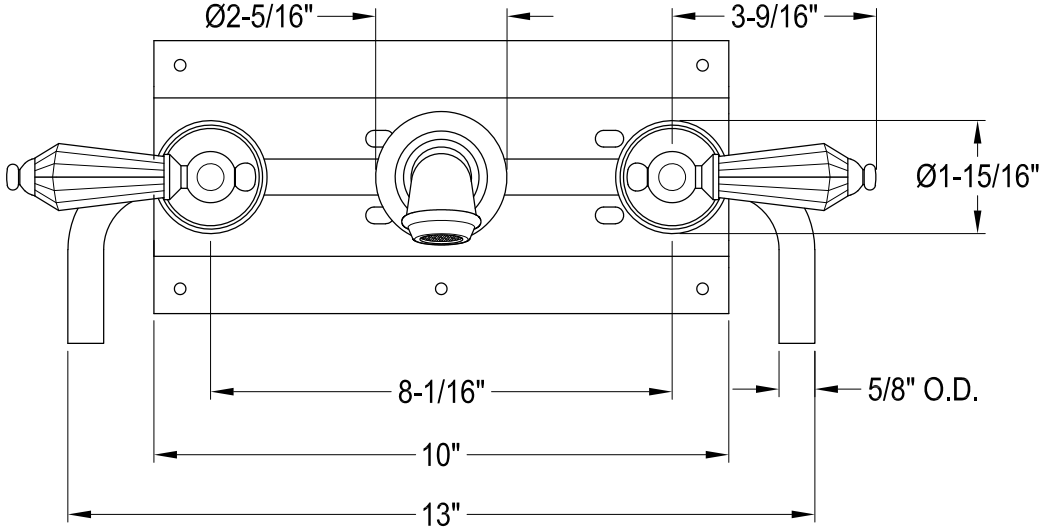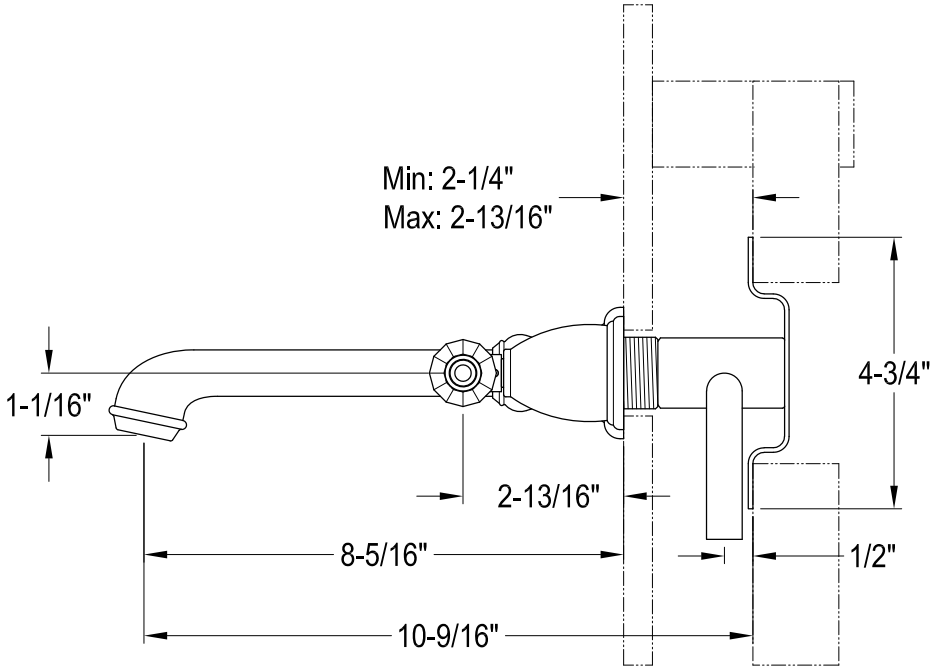
Twin Handles Wall Mount Bathroom Faucet