ADLER COFFEE TABLE

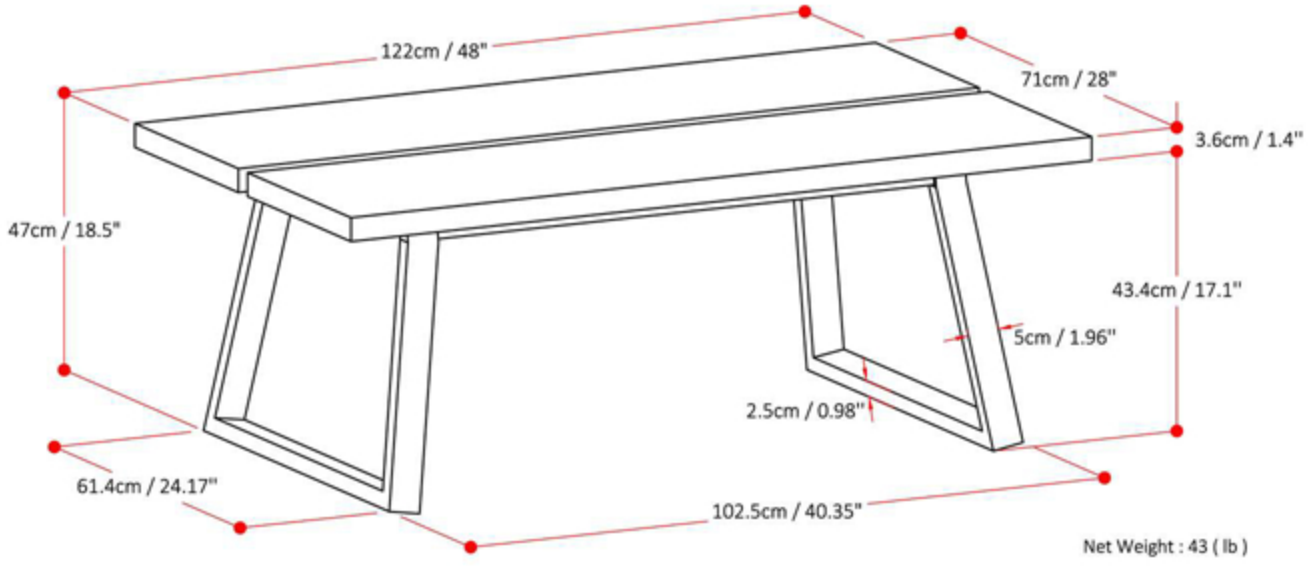

Net Weight : 43 (lb)