LS5410,1,3,4,5,6,7,8RL,RLAB,PN
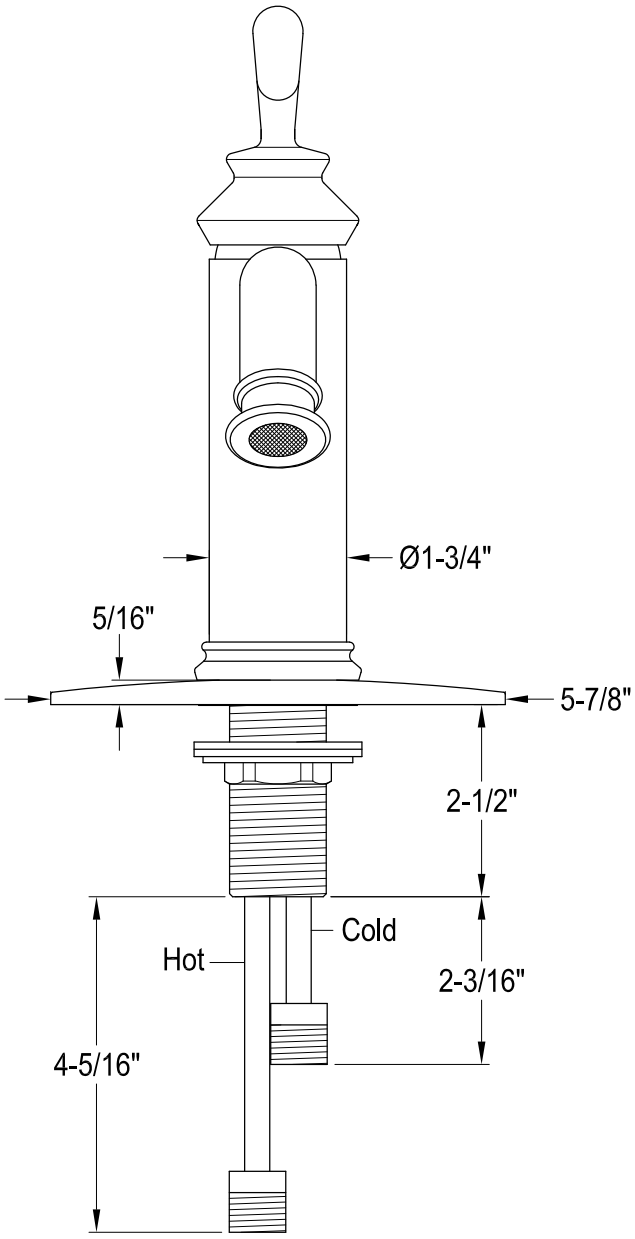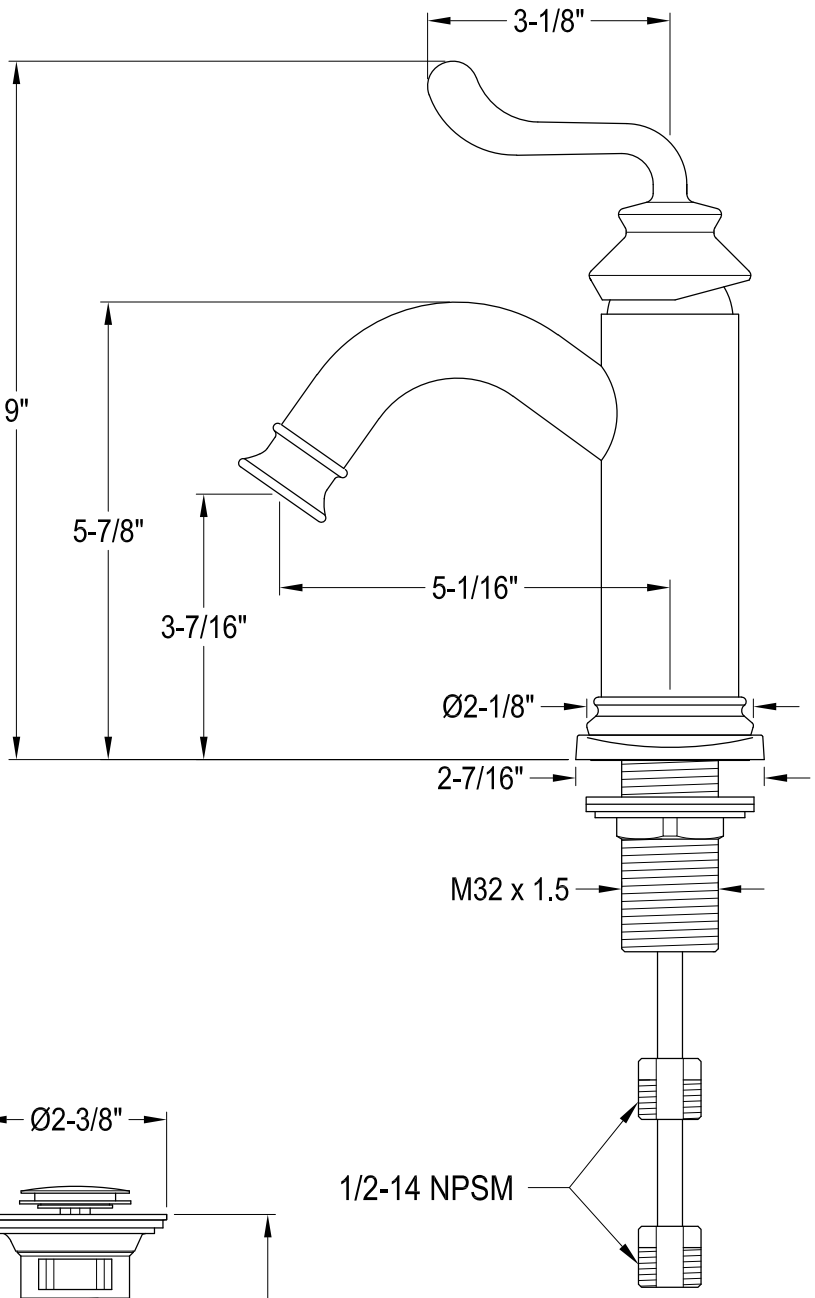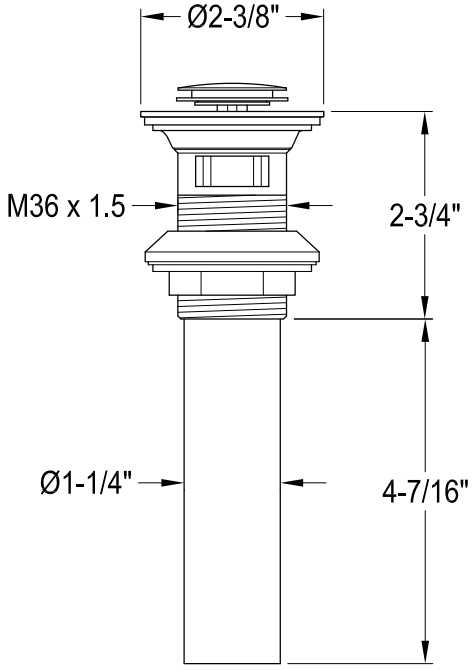
Single Handle Lavatory Faucet with Push-Up Pop-Up