SHIMANO

ULTEGRA

ULT-1000HGFB

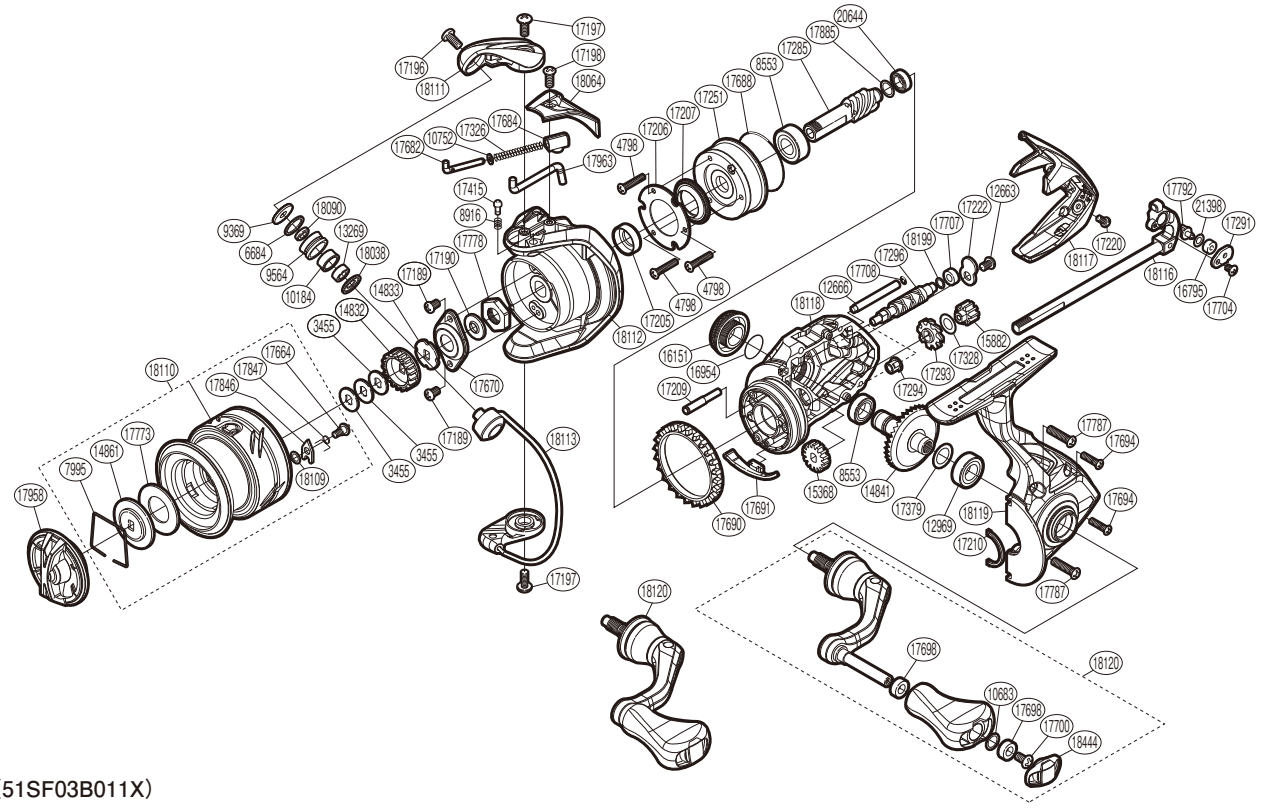

(51SF03B011X)

#	Part No.	Description	#	Part No.	Description	#	Part No.	Description
3455	10BXN	Spool Washer	17205	10JHG	Rotor Ring	17708	10JAC	O Ring
4798	103C6	Screw	17206	10L62	Roller Clutch Reinforce	17773	102ZG	Drag Washer
6684	10KFD	Line Roller Spacer	17207	10MH6	Roller Clutch Water Proof	17778	10TPL	Rotor Nut
7995	10B87	Drag Washers Retainer	17209	10CLD	Idle Gear B Shaft	17787	10DNA	Screw
8553	107AT	Ball Bearing	17210	10CBD	Flange Water Proof	17792	106UZ	Oscillating Pawl
8916	10CH0	Click Spring	17220	10PRZ	Screw	17846	10DNL	Drag Click
9369	10PFP	Washer	17222	10ATJ	Worm Shaft Retainer	17847	10DNP	Drag Click Spring
9564	10JLE	Line Roller	17251	10QPN	Roller Clutch Assembly	17885	10HEP	Washer
10184	10PFH	Line Roller Bushing	17285	10C4Y	Pinion Gear	17958	101FS	Drag Knob
10683	10HTT	Washer	17291	10HAJ	Oscillating Pawl Cover	17963	106L0	Bail Trip Lever
10752	10TYE	Bail Spring Guide A Support	17293	10CQT	Idle Gear B (Large)	18038	101ZK	Line Roller Support (B)
12663	10LHQ	Screw	17294	106M9	Worm Bushing (Front)	18064	101U6	Bail Spring Cover
12666	10H17	Oscillating Guide A	17296	1068F	Worm Shaft	18090	1019L	Bearing Spacer
12969	107FA	Ball Bearing	17326	10R2N	Bail Spring	18109	10245	Washer
13269	104VX	Ball Bearing	17328	10B7U	Washer	18110	10SHE	Spool Assembly
14832	103MU	Spool Support A	17379	10GR3	Washer	18111	10SHC	Bail Arm
14833	10J04	Spool Support B	17415	106ZC	Click Pin	18112	10TVB	Rotor
14841	10A8G	Drive Gear	17664	10TRB	Screw	18113	10TVL	Bail Assembly
14861	10BBM	Key Washer	17670	10TRH	Rotor Nut Lock Plate	18116	10TW3	Main Shaft Assembly
15368	10HBH	Idle Gear	17682	1061L	Bail Spring Guide A	18117	10SHD	Rear Protector
15882	106RH	Idle Gear B (Small)	17684	107AB	Bail Spring Seat	18118	10SHG	Body
16151	10N3Q	Handle Screw Cap	17688	10MLU	O Ring	18119	10TW6	Side Cover
16795	10JXT	Oscillating Slider Bushing	17690	104FV	Friction Ring	18120	10SHV	Handle Assembly
16954	10909	O Ring	17691	10TQF	Bail Trip Strike	18199	10ECK	Washer
17189	10PMC	Screw	17694	10TP1	Screw	18444	10FMJ	Handle Knob Seal
17190	107L4	Bearing Water Proof	17698	10PXZ	Handle Knob Bushing	20644	10RKR	Ball Bearing
17196	10PS8	Screw	17700	10LFA	Screw	21398	10RKQ	Washer
17197	10PS5	Screw	17704	10LCD	Screw			
17198	10PS7	Screw	17707	106CN	Worm Bushing	18054	10G4L	Anti Line Slip Sticker

Please note that the number of adjusting washers may not be the same as shown in the exploded views.
(Adjustment will vary with each individual product.)