AE56T1,AE55T0,5,6,7,8
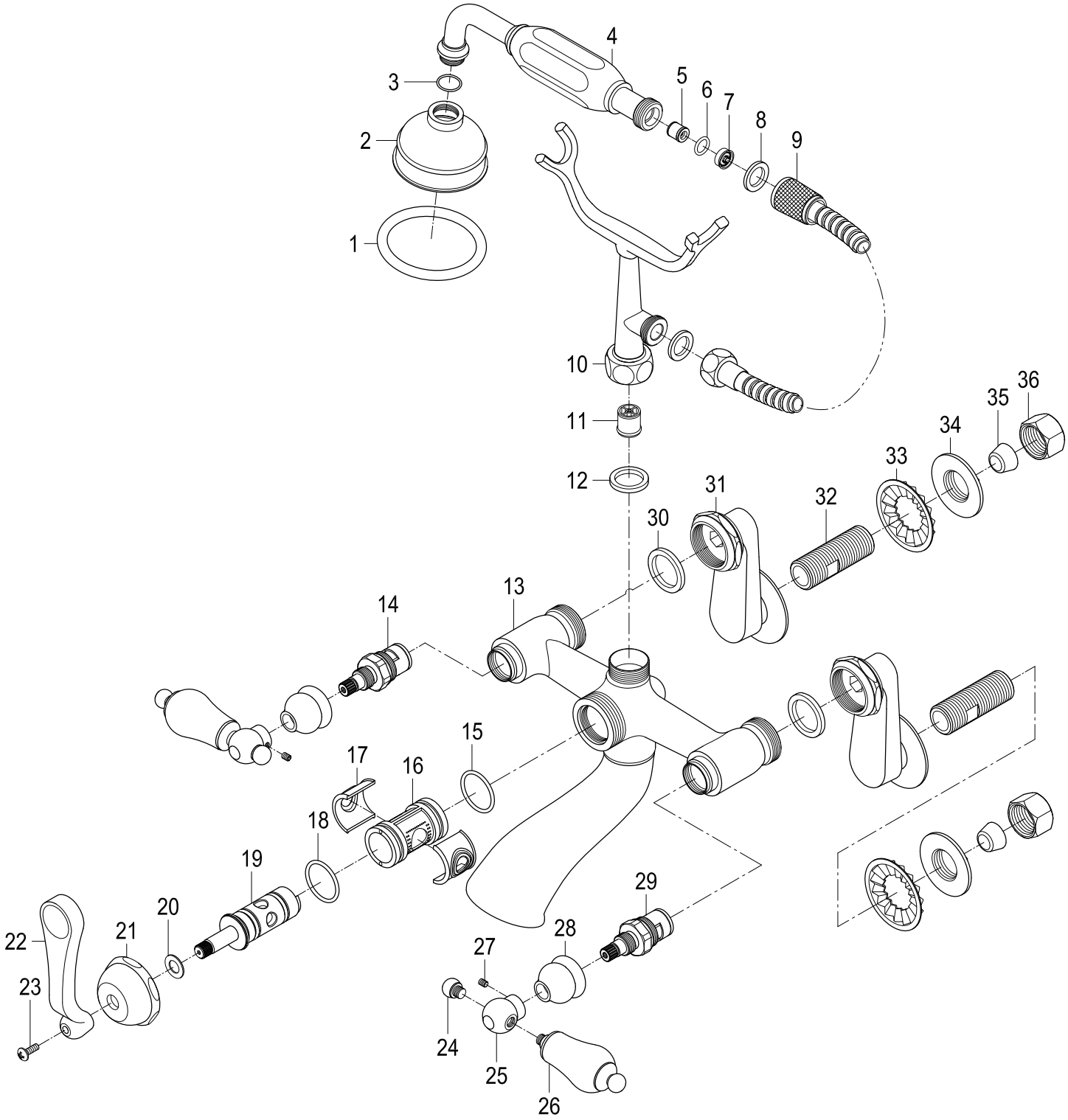
Wall Mount Tub Filler Faucet with Hand Shower