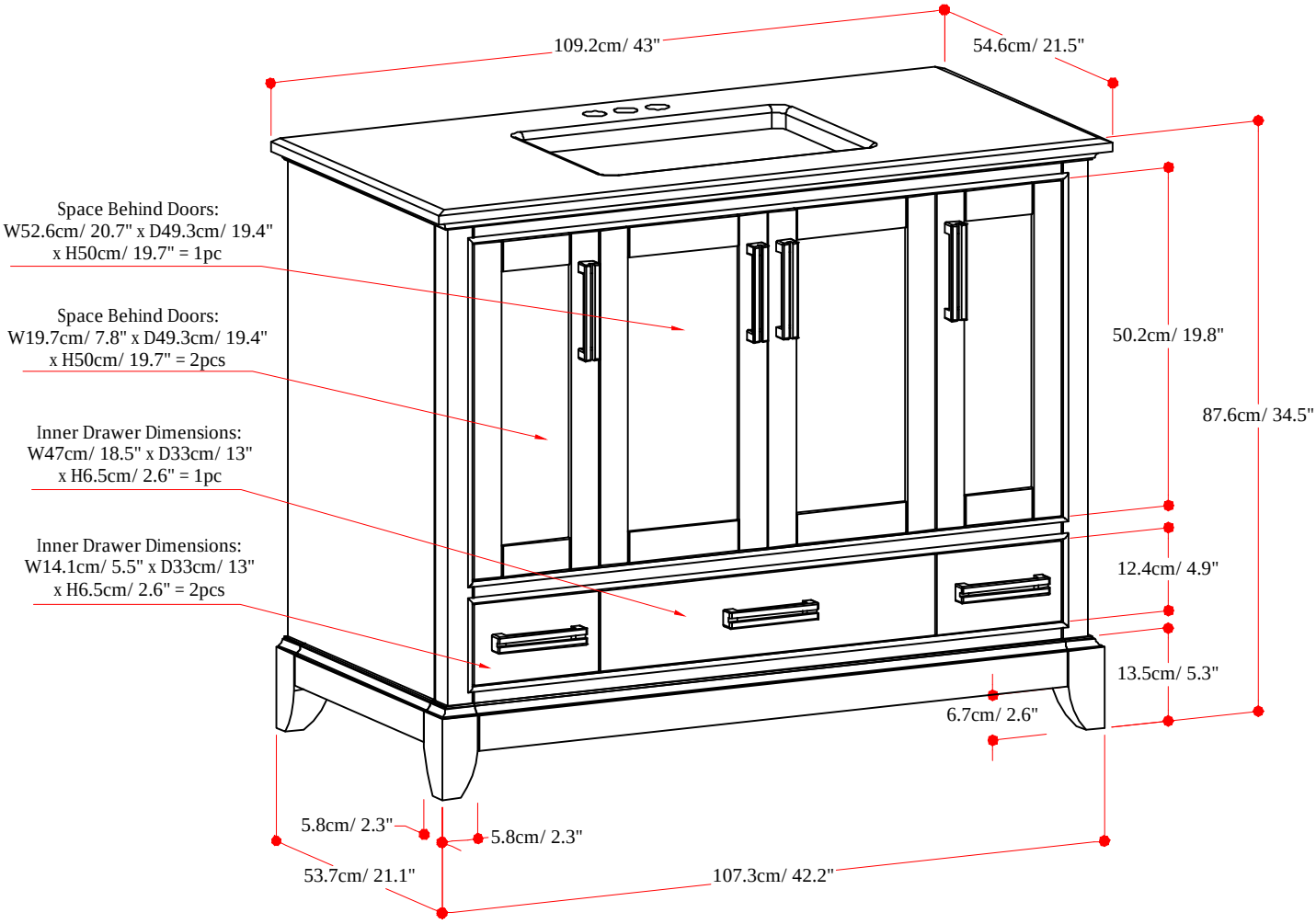

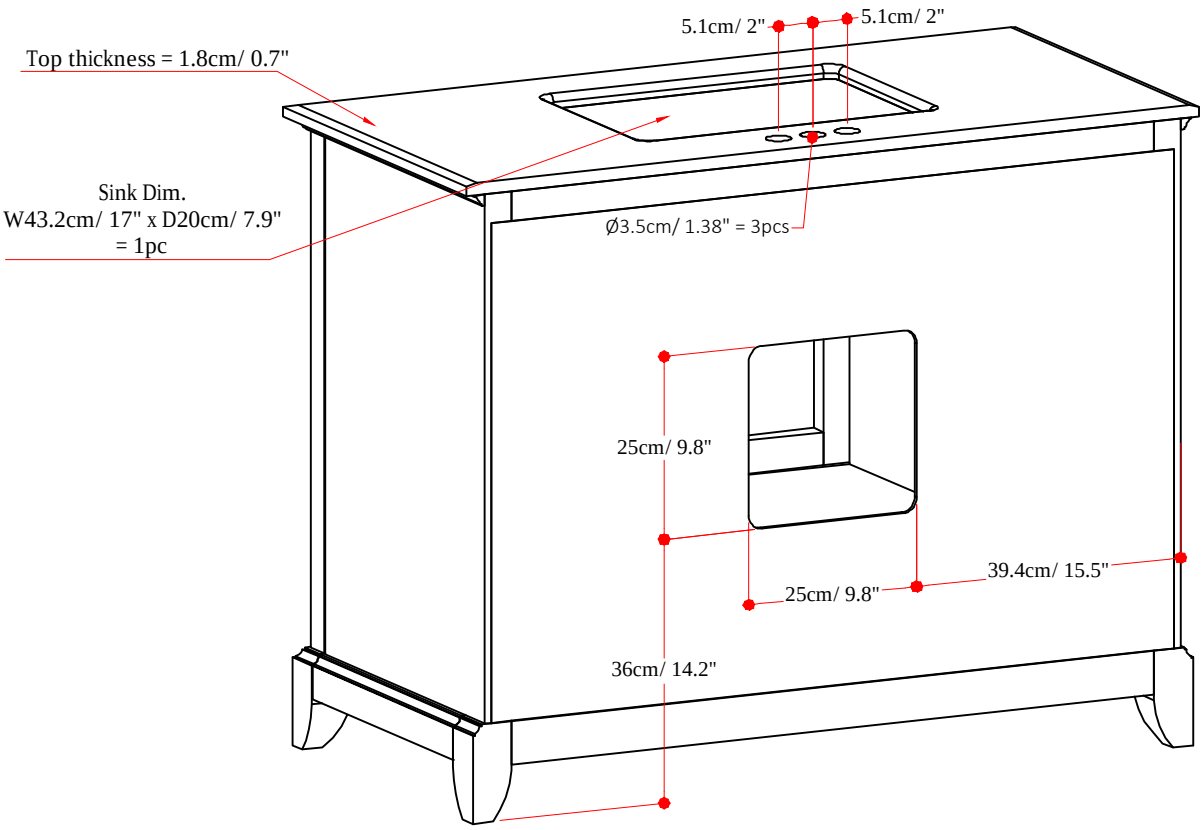

Net Weight: 159.8 (lbs)