AXOR

hansgrohe

Locarno
4-Hole Roman Tub Set Trim with 1.75 GPM Handshower
Finishes : **matte black** Part no. : **04817670**

Description

Features

- Consists of: 4-Hole Roman tub filler trim, Handshower, Handshower hose, Handshower holder
- PowderRain, Rain, Whirl
- Flow: 6.0 GPM (22.7 L/Min)
- flow rate of hand shower at 3 bar: 1.75 GPM (6.6 L/Min)
- 90° ceramic valves
- 4-hole rim mounted bath mixer, Mounting Material, Assembly instructions
- Does not include: Rough

Product image
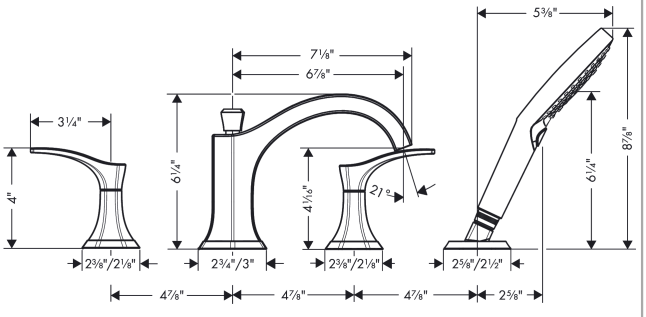
Scale drawing