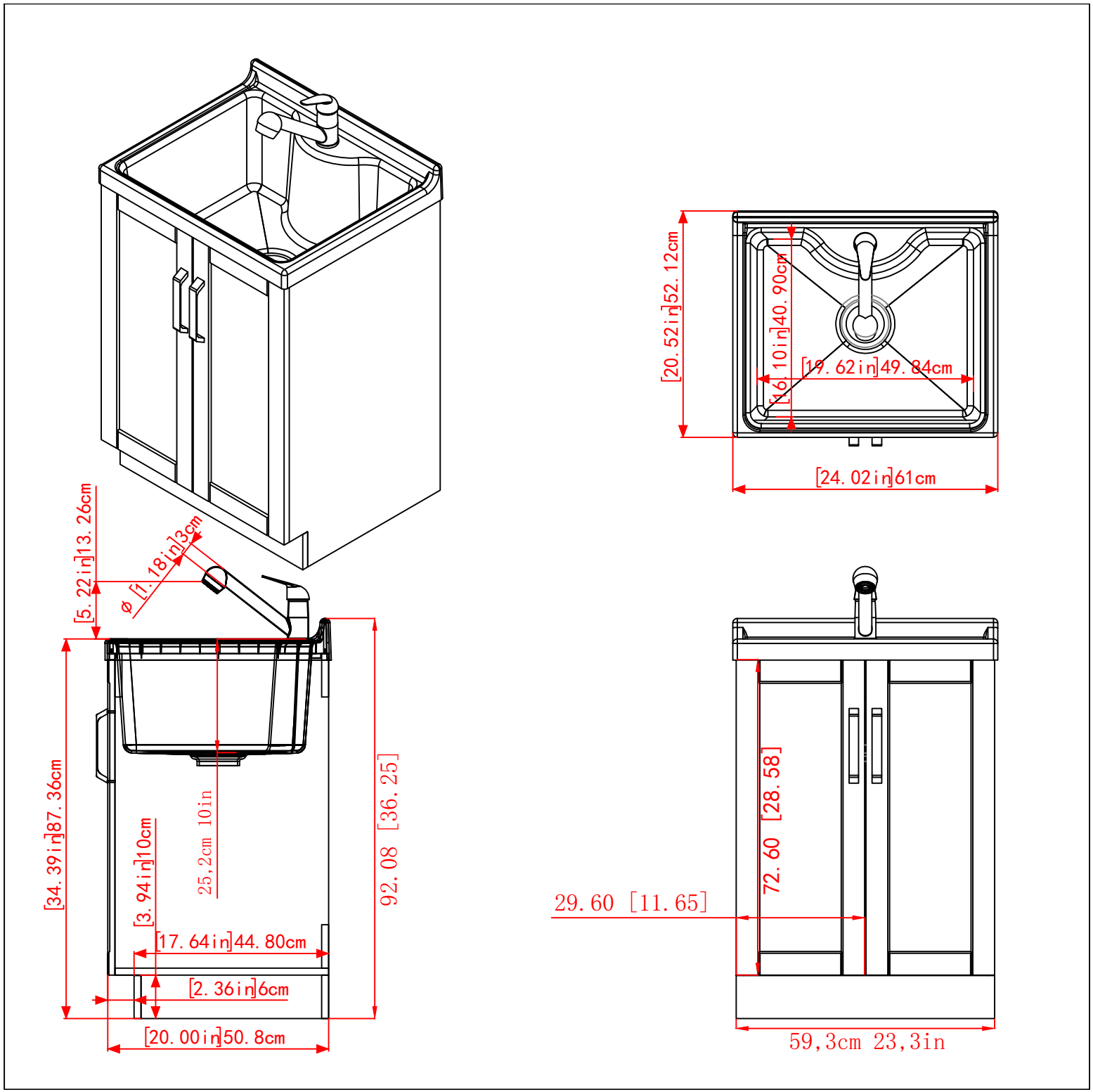
[20.52in]52.12cm
[16.10in]40.90cm
[19.62in]49.84cm
[24.02in]61cm
[5.22in]13.26cm
ø [1.18in]3cm
[34.39in]87.36cm
25,2cm 10in
92.08 [36.25]
[3.94in]10cm
[17.64in]44.80cm
[2.36in]6cm
[20.00in]50.8cm
72.60 [28.58]
29.60 [11.65]
59,3cm 23,3in