SHIMANO

SEDONA

SE-8000

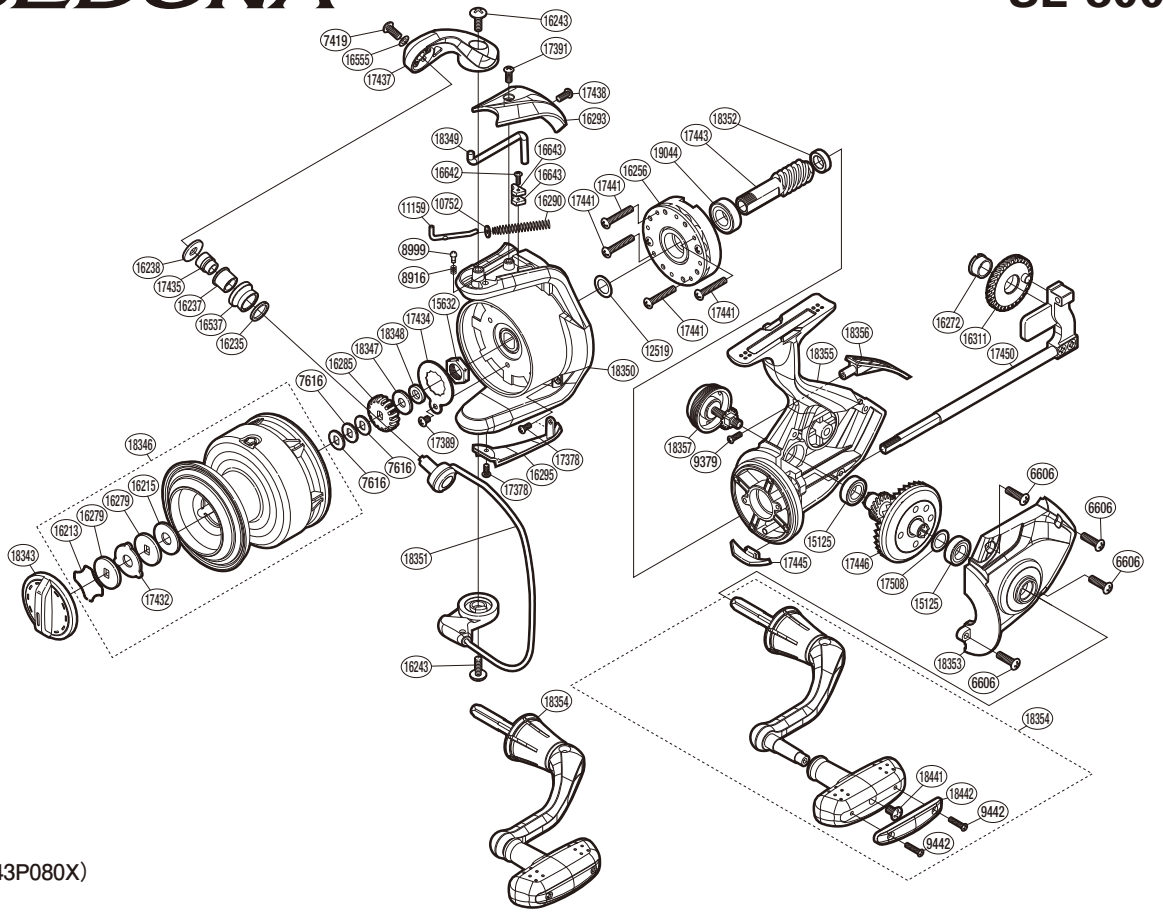

(51SB43P080X)

#	Part No.	Description	#	Part No.	Description	#	Part No.	Description
6606	10MBP	Screw	16279	10BC9	Key Washer	17445	10R32	Bail Trip Strike
7419	10LLG	Screw	16285	103MZ	Spool Support A	17446	10QZE	Drive Gear Assembly
7616	10PH6	Spool Washer	16290	105LL	Bail Spring	17450	1029T	Main Shaft Assembly
8916	10CH0	Click Spring	16293	10880	Bail Spring Cover	17508	10HHV	Washer
8999	10HEA	Click Pin	16295	10MND	Bail Hold Support Guard	18343	10SJG	Drag Knob Assembly
9379	10L1U	Screw	16311	10G9Q	Oscillating Gear	18346	10SVE	Spool Assembly
9442	10L1X	Screw	16537	10KXY	Line Roller	18347	10KQM	Washer
10752	10TYE	Bail Spring Guide A Support	16555	10684	Counter Weight	18348	10HQZ	Washer
11159	105LV	Bail Spring Guide A	16642	10LSG	Screw	18349	10SVD	Bail Trip Lever
12519	10HHP	Rotor Washer	16643	107EU	Counter Weight B	18350	10SV8	Rotor
15125	107FB	Ball Bearing	17378	10L1R	Screw	18351	10S9G	Bail Assembly
15632	1080W	Rotor Nut	17389	10LHN	Screw	18352	10SV6	Pinion Gear Bushing
16213	10B8Q	Drag Washers Retainer	17391	10LFK	Screw	18353	10SV7	Side Cover
16215	10348	Drag Washer	17432	10R23	Eared Washer	18354	10SJJ	Handle Assembly
16235	1072L	Line Roller Spacer	17434	10R3T	Rotor Nut Retainer	18355	101DQ	Body Assembly
16237	107RP	Line Roller Bushing	17435	10R3S	Line Roller Collar	18356	10SUW	Body I.D. Plate
16238	107X5	Line Roller Washer	17437	10R29	Bail Arm	18357	10SVM	Handle Screw Cap Assembly
16243	103UN	Screw	17438	10LFF	Screw	18441	10L25	Screw
16256	10QPG	Roller Clutch Assembly	17441	10LJ3	Screw	18442	10SV0	Handle Knob I.D. Plate
16272	103QT	Oscillating Gear Bushing	17443	10R2X	Pinion Gear	19044	10M4P	Ball Bearing

Please note that the number of adjusting washers may not be the same as shown in the exploded views.
(Adjustment will vary with each individual product.)