Cypress Outdoor Dining Table AXCPTDT-CYP

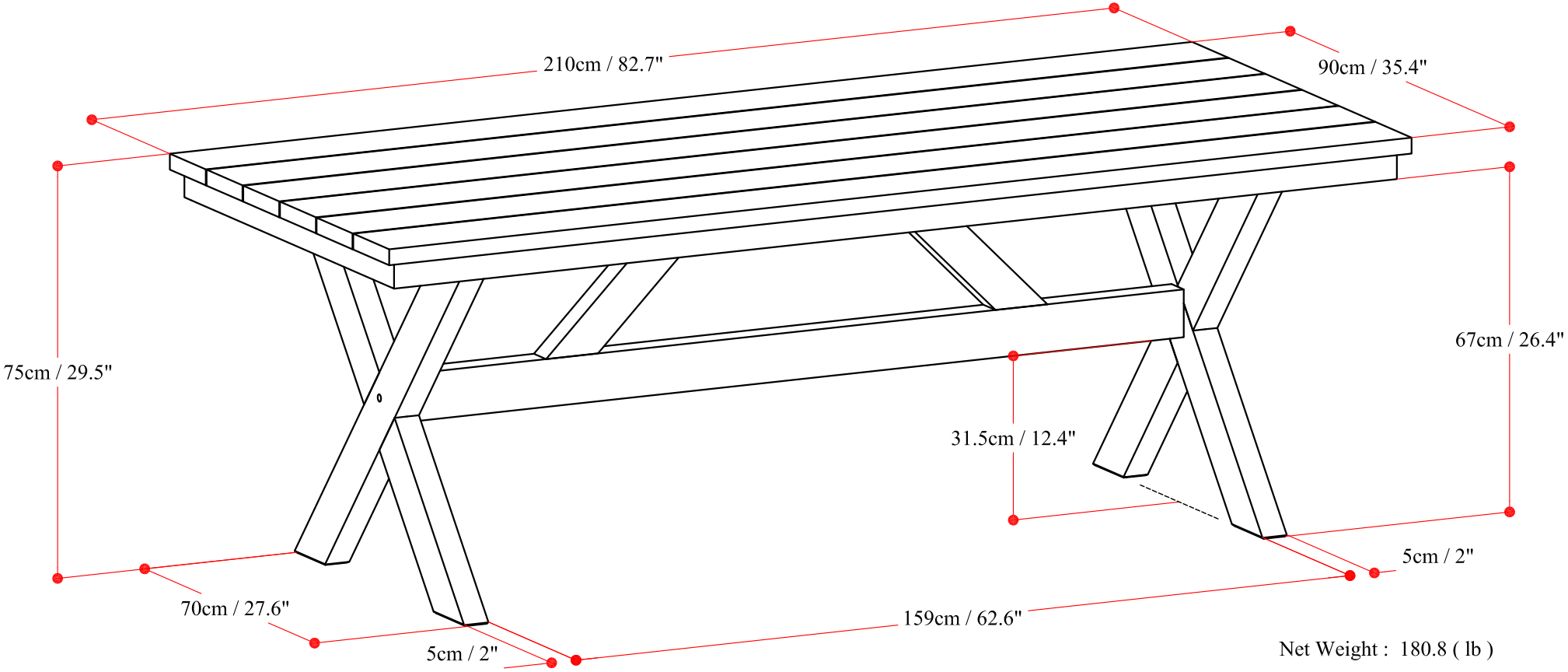

Net Weight : 180.8 (lb)