NOTES:
1. MATERIAL: .015 TK BRIGHT 430 STAINLESS STEEL

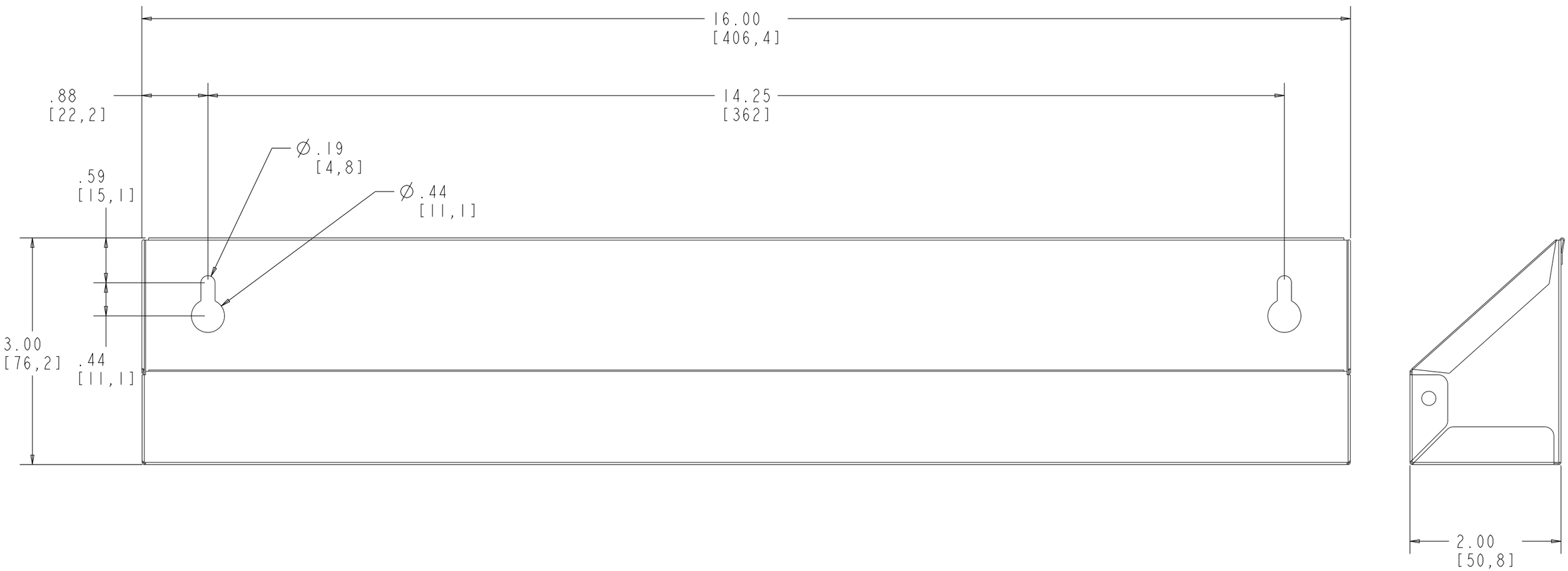

CUSTOMER DRAWING

REV.	DATE	BY	DESCRIPTION OF CHANGE

INCH [MM] — AMERICAN PROJECTION

	BY	DATE
DRAWN	BKT	7/29/14

TOLERANCES
MAT. DEC.
(WOOD) .XX ±.03 [.8mm]
(OTHER) .XX ±.02 [.5mm]
(ALL) .XXX ±.005 [.13 mm]
FRACTIONS ±1/32 [.8 mm]
ANGLES ±1/2°

REV-A-SHELF® INC.

SIZE B — REGULAR 16" STAINLESS STEEL TIP OUT TRAY

MATERIAL

FINISH

DRAWING NO. 6581-11-1600

SCALE 0.750

PART NO. 6581-11-1600

SHEET 1 OF 2

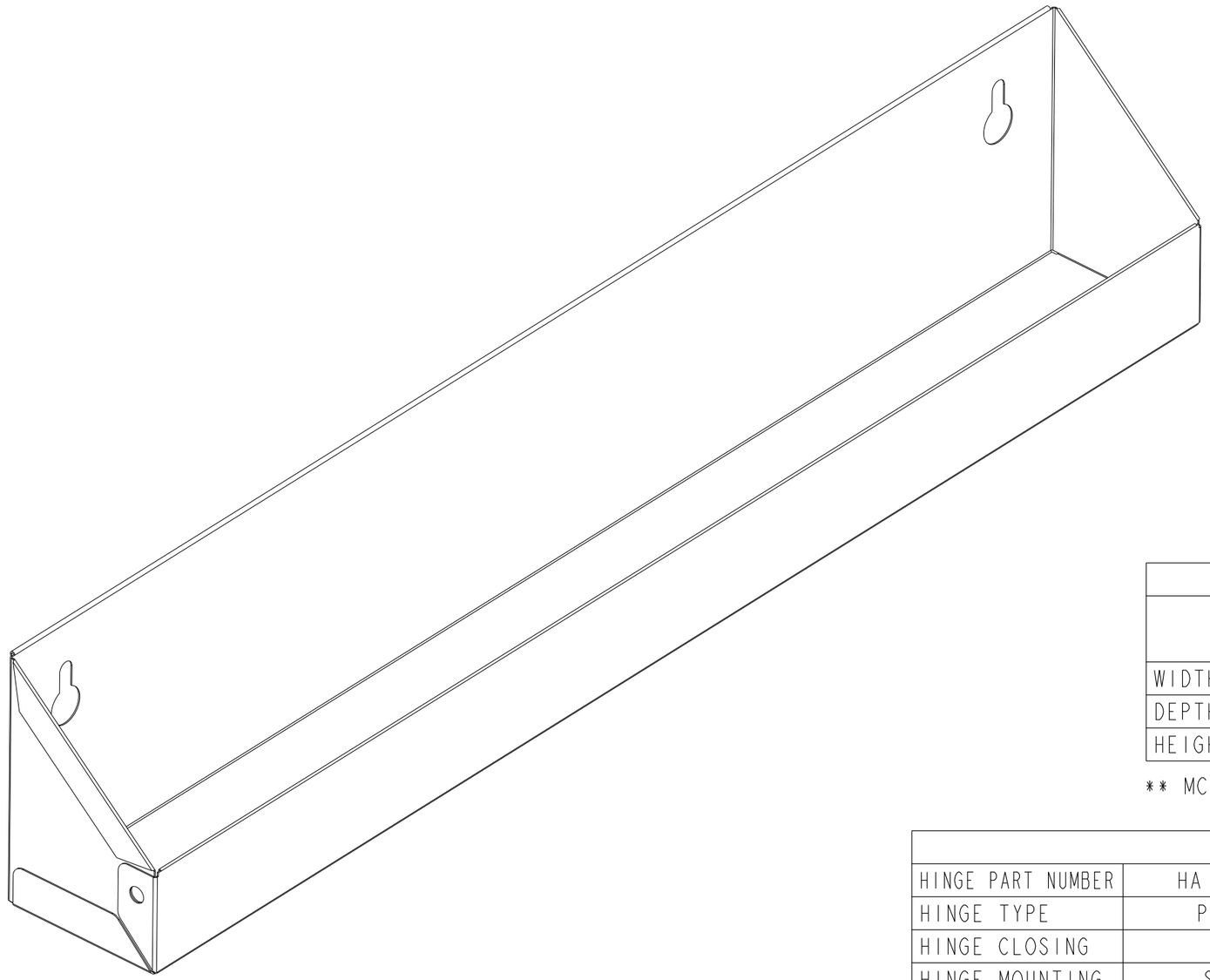

PART DIMENSIONS	
WIDTH	16.00 [406,4]
DEPTH	2.00 [50,8]
HEIGHT *	3.00 [76,2]

* HEIGHT W/ SELF-HOLDIN HINGES: 3.80 [96,5]

MIN CABINET OPENING **				
	FACE FRAME	FRAMELESS	INSET FACE FRAME	INSET FRAMELESS
WIDTH	18.25 [464]	18.25 [464]	18.25 [464]	18.25 [464]
DEPTH	2.25 [57,2]	2.25 [57,2]	3.00 [76,2]	3.00 [76,2]
HEIGHT	3.88 [98,4]	3.88 [98,4]	3.88 [98,4]	3.88 [98,4]

** MCO BASED ON SELF-HOLDIN HINGES

HINGE SPECIFICATIONS				
HINGE PART NUMBER	HA 95-MZ	RELEASE PART NUMBER	N/A	
HINGE TYPE	PIVOT	HINGE EXTENSION	45°	MAX WEIGHT RATING
HINGE CLOSING	N/A	HINGE LENGTH	N/A	
HINGE MOUNTING	SIDE	HINGE FINISH	ZINC	N/A

CUSTOMER DRAWING

REV.	DATE	BY	DESCRIPTION OF CHANGE

INCH [MM] — AMERICAN PROJECTION

	BY	DATE
DRAWN	BKT	7/29/14

TOLERANCES
MAT. DEC.
(WOOD) .XX ±.03 [.8mm]
(OTHER) .XX ±.02 [.5mm]
(ALL) .XXX ±.005 [.13 mm]
FRACTIONS ±1/32 [.8 mm]
ANGLES ±1/2°

REV-A-SHELF® INC.

SIZE B — REGULAR 16" STAINLESS STEEL TIP OUT TRAY

MATERIAL

FINISH

DRAWING NO. 6581-11-1600

SCALE 0.750

PART NO. 6581-11-1600

SHEET 2 OF 2