SHIMANO

STELLA

STL-C3000XG

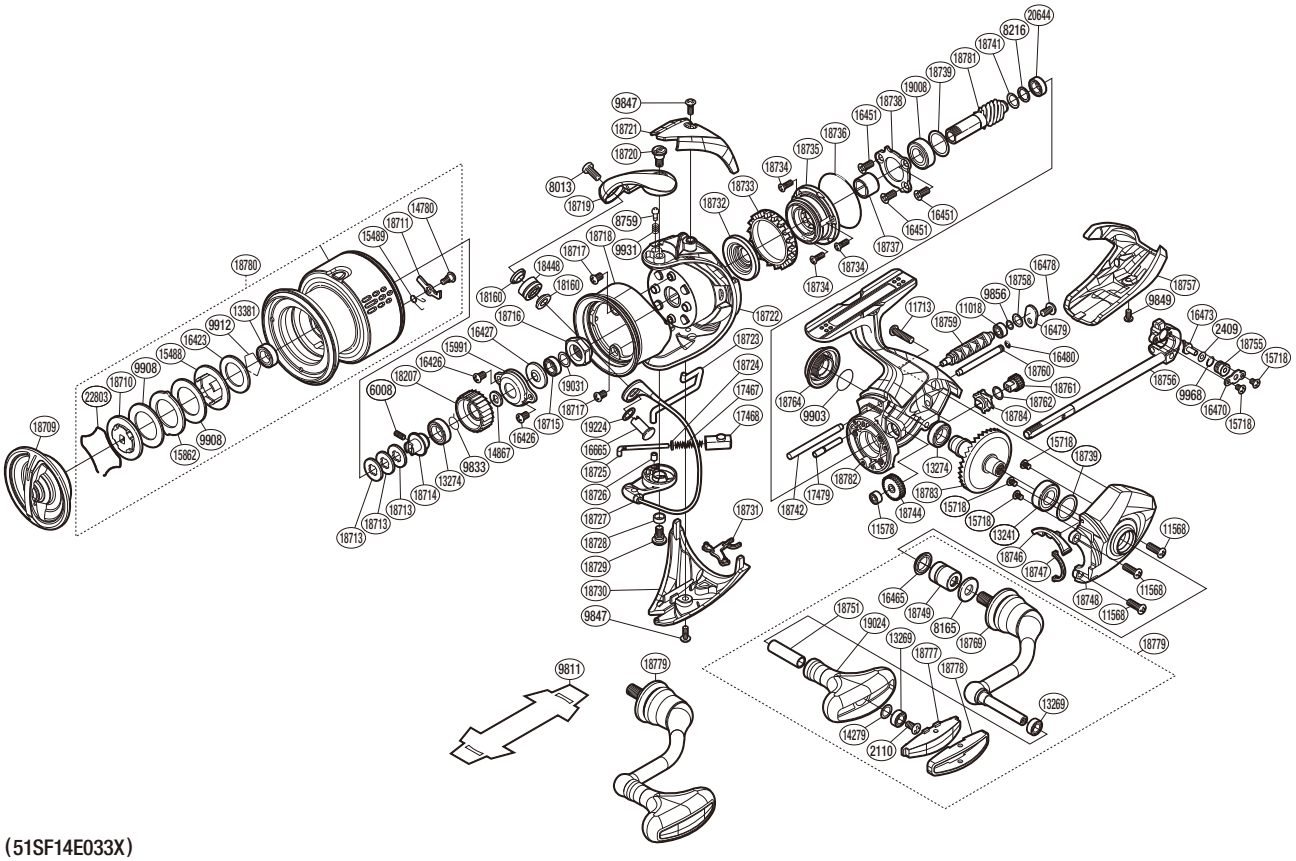

(51SF14E033X)

#	Part No.	Description	#	Part No.	Description	#	Part No.	Description
2110	103E9	Screw	16473	106VL	Oscillating Pawl	18737	10DJY	Roller Clutch Inner
2409	1059U	Spacer	16478	103EB	Screw	18738	10DJZ	Bearing Retainer
6008	10PN2	Set Screw	16479	10ATB	Worm Shaft Retainer	18739	10RYR	Washer
8013	10K40	Screw	16480	10JAB	O Ring	18741	10SYU	Washer
8165	10FJ6	Washer	16665	10L02	Line Roller Support	18742	101CZ	Oscillating Guide A
8216	10HV4	Washer	17467	10R2P	Bail Spring	18744	10DK0	Idle Gear
8759	106UX	Click Pin	17468	10R2E	Bail Spring Guide B	18746	10DJK	Bail Trip Strike
9833	107V2	Ratchet Spring	17479	10R3L	Idle Gear B Shaft	18747	10DKA	Flange Water Proof
9847	10CYU	Screw	18160	1020L	Bearing Spacer	18748	100MP	Side Cover Assembly
9849	106ZG	Screw	18207	10SYS	Drag Click Ratchet	18749	10TJW	Handle Shaft Cover B
9856	10HZ1	Washer	18448	101BJ	Line Roller Set (With Bearing)	18751	1022F	Handle Knob Pipe
9903	108WA	O Ring	18709	10S17	Drag Knob Assembly	18755	101BY	Oscillating Slider Bushing
9908	102ZP	Drag Washer	18710	10TJV	Key Washer	18756	100MY	Main Shaft Assembly
9912	10GEW	Bearing Retainer	18711	10TJX	Drag Click	18757	101CL	Rear Protector
9931	10CGZ	Click Spring	18713	10BU8	Spool Washer	18758	10TK0	Washer
9968	108W9	O Ring	18714	10DKF	Bearing Bushing	18759	101CR	Worm Shaft
11018	10PDA	Ball Bearing	18715	10TD2	Main Shaft Spacer Assembly(With Bearing)	18760	101D2	Oscillating Guide B
11568	10M2C	Screw	18716	101CY	Rotor Nut	18761	10DK2	Idle Gear (Small)
11578	10PC0	Ball Bearing	18717	101C6	Screw	18762	10TJT	Washer
11713	10M2Y	Screw	18718	10TK1	Rotor Brim	18764	10DK4	Handle Screw Cap
13241	104JD	Ball Bearing	18719	101CX	Bail Arm	18769	100MZ	Handle Shank Assembly
13269	104VX	Ball Bearing	18720	10DK8	Screw	18777	101C5	Handle Knob Seal
13274	104PP	Ball Bearing	18721	10DK9	Bail Spring Cover	18778	101C0	Handle Knob I.D. Plate
13381	104JT	Ball Bearing	18722	100N2	Rotor Assembly	18779	10S10	Handle Assembly
14279	10G8G	Washer	18723	101D4	Bail Trip Lever	18780	1002P	Spool Assembly
14780	10A6F	Screw	18724	101D9	Spring Guide A Support	18781	10DL2	Pinion Gear
14867	103PE	Spool Support	18725	10DJN	Bail Spring Guide A	18782	100MX	Body Assembly
15488	10BBQ	Key Washer	18726	10DKC	Bail Spring Guide A Bush	18783	10DKU	Drive Gear
15489	10BQE	Drag Click Spring	18727	100N1	Bail Assembly	18784	10DKY	Idle Gear (Large)
15718	1055G	Screw	18728	101D0	Bail Trip Cam Bushing	19008	1022A	Ball Bearing
15862	102XW	Eared Washer	18729	10S9Q	Screw	19024	10DJ2	Handle Knob
15991	1076P	Rotor Nut Lock Plate	18730	10DJX	Bail Hold Support Guard	19031	1026J	Washer
16423	10C1D	Drag Washer	18731	10TJS	Rotor Side Cover	19224	1002S	Washer
16426	103LB	Screw	18732	101D5	Rotor Ring	20644	10RKR	Ball Bearing
16427	107L2	Bearing Water Proof	18733	10DK7	Friction Ring	22803	145QR	Drag Washers Retainer
16451	10ML6	Screw	18734	101D7	Screw			
16465	10PXU	Handle Shaft Seal	18735	10S2L	Roller Clutch Assembly			
16470	10HAG	Oscillating Pawl Cover	18736	10DKD	O Ring	9811	10PBS	Reel Seat Spacer (Accessory)

Please note that the number of adjusting washers may not be the same as shown in the exploded views.
(Adjustment will vary with each individual product.)

(240627)_010