Swiss Madison®
well made forever

One Piece Toilet

FEATURES:

- One-piece, seamless design
- Glazed ceramic, skirted trapway
- Elongated bowl
- Comfort 17.5" bowl & seat height
- Single, Vortex™ flush 1.1/1.6 GPF
- Quick-release, soft-close seat

INSTALLATION:

Floor mount
Standard 10" rough-in

INCLUDED PARTS:

- Toilet
- Installation Hardware

SPECIFICATIONS:

N.W: 105.62 lb.
D: 27" x W: 15" x H: 31.5"

COLORS & FINISHES:

Glossy White

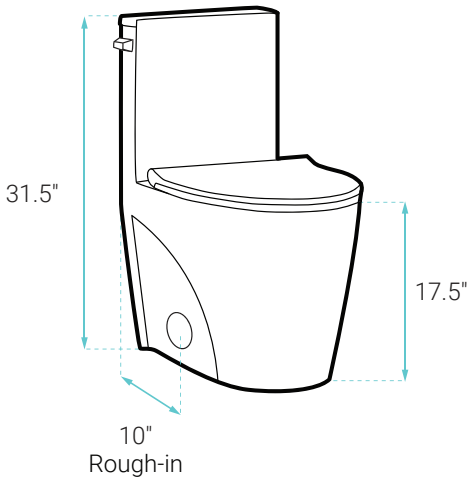

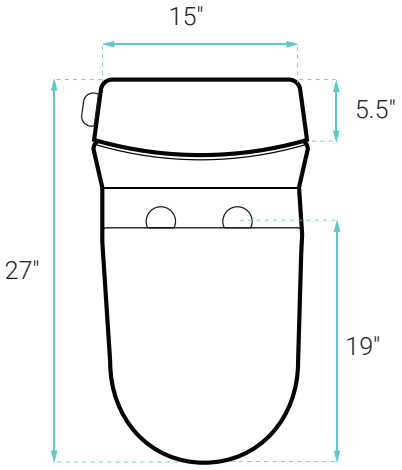

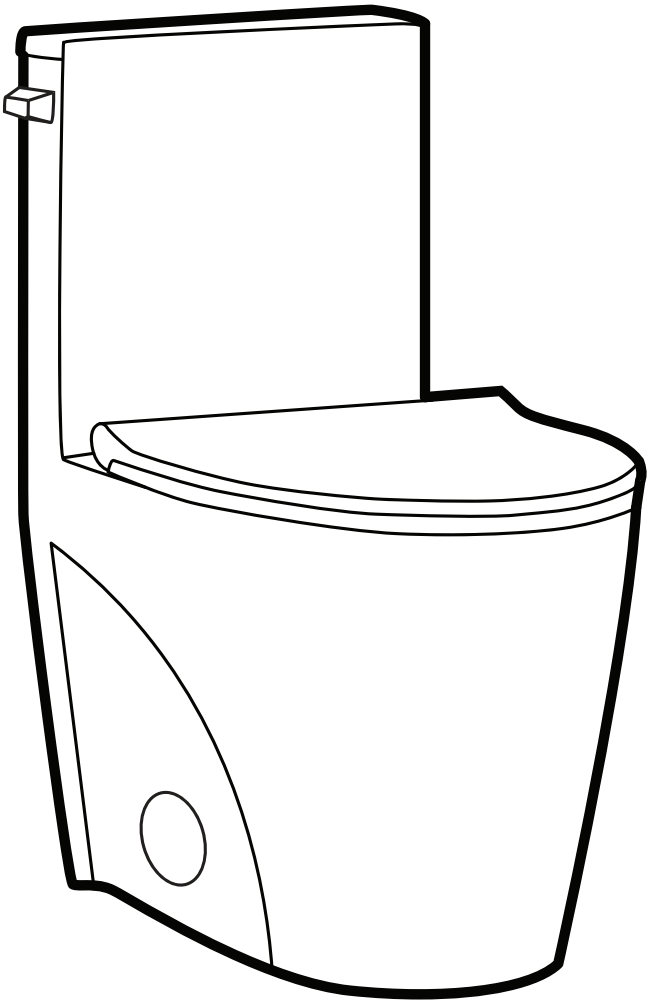

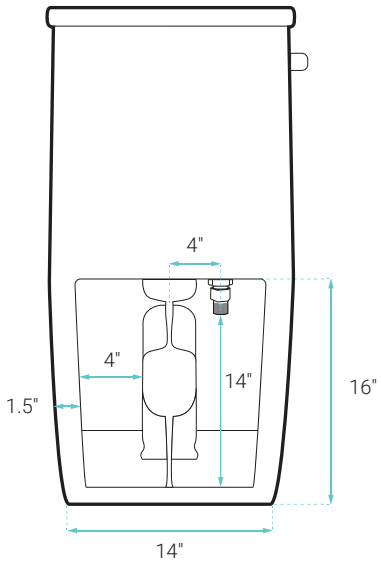

ADA