SHIMANO

NASCI

NS-4000XG

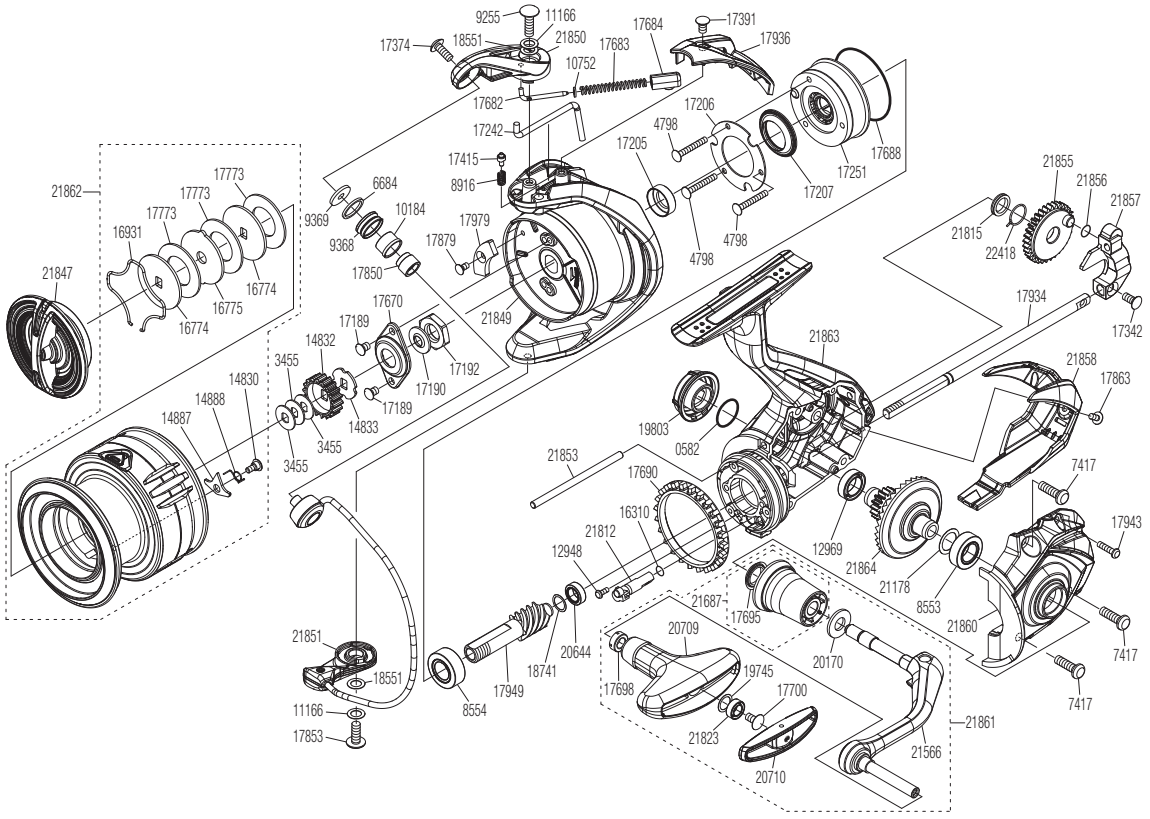

Please note that the number of adjusting washers may not always be the same as shown in the exploded views.

(51SF45H045X) Please note that your actions take full responsibility when you take it apart.

#	Part No.	Description	#	Part No.	Description	#	Part No.	Description
0582	108WH	O Ring	17242	106P4	Bail Trip Lever	20709	10RHC	Handle Knob
3455	10BXN	Spool Washer	17251	10QPN	Roller Clutch Assembly	20710	10S3U	Handle Knob Seal
4798	103C6	Screw	17342	10ML7	Screw	21178	10EEZ	Washer
6684	10KFD	Spacer	17374	10K90	Screw	21566	101G1	Handle Shank Assembly
7417	10L9Q	Screw	17391	10LFK	Screw	21687	10SY6	Handle Shaft Cover Assembly
8553	107AT	Ball Bearing	17415	106ZC	Click Pin	21812	10TB2	Anti Reverse Cam
8554	107FE	Ball Bearing	17670	10TRH	Rotor Nut Lock Plate	21815	10TBH	Bushing
8916	10CH0	Click Spring	17682	1061L	Bail Spring Guide A	21823	10K64	Ball Bearing
9255	10LHX	Screw	17683	105R6	Bail Spring	21847	101UA	Drag Knob Assembly
9368	10JLF	Line Roller	17684	107AB	Bail Spring Guide B	21849	101UE	Rotor
9369	10PFP	Washer	17688	10MLU	O Ring	21850	101HV	Bail Arm
10184	10PFH	Bushing	17690	104FV	Friction Ring	21851	10RJ5	Bail Assembly
10752	10TYE	Bail Spring Guide A Collar	17695	10PXV	Handle Shaft Seal	21853	101HU	Oscillating Guide
11166	10KFA	Washer	17698	10PXZ	Bushing	21855	101HS	Oscillating Gear
12948	10L1N	Screw	17700	10LFA	Screw	21856	10241	O Ring
12969	107FA	Ball Bearing	17773	102ZG	Drag Washer	21857	101UC	Oscillating Slider
14830	10PH5	Screw	17850	1020X	Collar	21858	10R94	Rear Protector
14832	103MU	Spool Support A	17853	10LFH	Screw	21860	10R91	Side Cover
14833	10J04	Spool Support B	17863	10LCS	Screw	21861	10240	Handle Assembly
14887	1038D	Drag Click	17879	10LA3	Screw	21862	101U8	Spool Assembly
14888	10JM5	Drag Click Spring	17934	101SZ	Main Shaft	21863	10RJQ	Body Assembly
16310	108WU	O Ring	17936	101T5	Bail Spring Cover	21864	1023Z	Drive Gear
16774	10BCE	Key Washer	17943	10LPL	Screw	22418	10RPB	Bushing Spring
16775	102ZD	Eared Washer	17949	101SV	Pinion Gear			
16931	10B8N	Retainer	17979	106GA	Counter Weight			
17189	10PMC	Screw	18551	10K96	Washer			
17190	107L4	Bearing Water Proof	18741	10SYU	Washer			
17192	1067Y	Rotor Nut	19745	104FH	Washer			
17205	10JHG	Rotor Ring	19803	10RSK	Handle Screw Cap			
17206	10L62	Roller Clutch Reinforce	20170	10E5X	Washer			
17207	10MH6	Roller Clutch Water Proof	20644	10RKR	Ball Bearing			