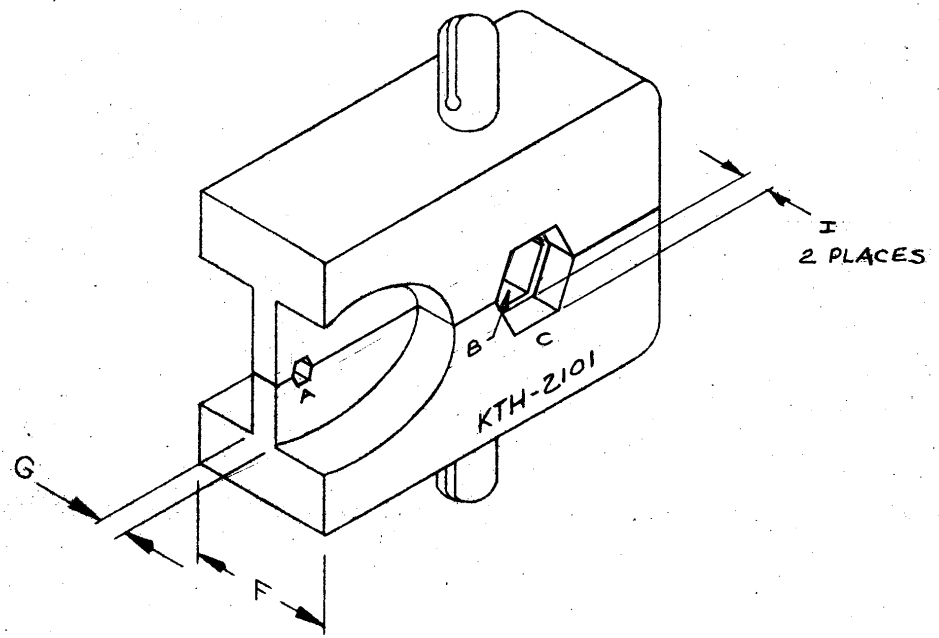

NOTES:

1. FOR USE WITH RG-55,58,141,142 & 223/U CABLE GROUPS.

HEX SIZES (ACROSS FLATS)					DIE WIDTH	WEB WIDTH		
A	B	C	D		F	G	H	I
.100	.213	.253	—		.500	.093	—	.083

UNLESS OTHERWISE SPECIFIED:

1. TOLERANCES: FRACTIONS & 2 PLACE DECIMALS ± .010
   3 PLACE DECIMALS ± .004 ANGLES ± 0° 30'
   T. I. R. CONCENTRICITY OF ANY 2 DIAMETERS MAY NOT EXCEED HALF THE SUM OF THEIR TOLERANCES
2. REMOVE ALL BURRS, BREAK SHARP EDGES .005 MAX.
3. NO FILLETS PERMITTED.
4. SURFACE ROUGHNESS 63 MICROINCHES RMS MAX.
5. ALL DIMENSIONS PRIOR TO PLATING.

REVISIONS

ISSUE	CHANGES
1.	CN 16043 A WEB THICK. REV. L1 13 JUL 76
2.	CN 27545 C SD 7 NOV 85

REF:

FINISH

SPEC.

MATL.

SPEC.

CRIMP DIE

DRAWN GINO DATE 11 AUG 75

APPR [signature] DATE 13 JUL 76

KINGS ELECTRONICS
40 MARBLEDALE ROAD
TUCKAHOE, N. Y. 10707

KTH-2101