TOTO®

MW634574CEFG

Supreme® II Connect+™ Toilet, 1.28GPF with Washlet® S300e Connect+

FEATURES

- Concealed supply connection for seamless installation
- High-efficiency Tornado Flush™ (1.28GPF/4.8LPF)
- CeFiONtect™ glaze prevents debris from sticking to ceramic surfaces for easy cleaning
- Universal Height
- Elongated front bowl
- Decorative one-piece design with high-profile tank
- Chrome trip lever
- 12" Rough-in, less supply
- See Spec sheet SW574T20 for Washlet features

CeFiONtect

Tornado Flush

connect+

ewater+

MODELS

- CST634CEFGT20 - With CeFiONtect glaze

REQUIRED WASHLET CONNECT+

- **SW574T20 Washlet® S300e Connect+**
  Fits TOTO Connect+ toilet bowl models only

COLORS/FINISHES

- Standard
  #01 Cotton

PRODUCT SPECIFICATION

The one-piece high-efficiency Tornado Flush toilet shall be 1.28GPF/4.8LPF. Universal Height Toilet with CeFiONtect glaze finish. Toilet shall have high-profile tank, elongated front bowl and chrome trip lever. Toilet shall be **TOTO Model CST634CEFGT20#01**.

See TOTO Specification sheet **SW574T20** for details on required Washlet.

CODES/STANDARDS

- Meets and exceeds ASME A112.19.2/CSA B45.1
- Certifications: IAPMO(cUPC), EPA WaterSense, State of Massachusetts , City of Los Angeles, and others
- Code compliance: UPC, IPC, NSPC, NPC Canada, and others
- Legislative Compliance: California AB715, California Green Building Code, City of Los Angeles Water Efficiency Ordinance
- ADA compliant (when installed with trip lever located on the approach side)

MS634574CEFG

Supreme® II Connect+™ Toilet, 1.28GPF with Washlet® S300e Connect+

SPECIFICATIONS

- Water Use 1.28 GPF/4.8LPF
- Flush System Tornado Flush™
- Min. Water Pressure 8 psi (flowing)
- Water Surface 7-1/8" x 9-1/8"
- Trap Diameter 2-1/8"
- Rough-in 12"
- Trap Seal 2-1/8"
- Warranty One Year Limited Warranty
- Material Vitreous china
- Shipping Weight CST634CEFGT20 104lbs.
  SW574T20 13.5lbs.
- Shipping Dimensions CST634CEFGT20
  29-1/2" L x 18"W
  x 19-1/4" H[1] x 27-1/8" H[2]
  SW574T20
  23"X 19-1/4" X 5-1/2"

- See Spec sheet **SW574T20** for Washlet details

INSTALLATION NOTES

Back-to-Back Toilet Installations:
TOTO recommends the use of a nationally listed, double sanitary tee-wye only, in vertical waste stacks, in accordance with the stipulations noted in the majority of nationally recognized plumbing codes.

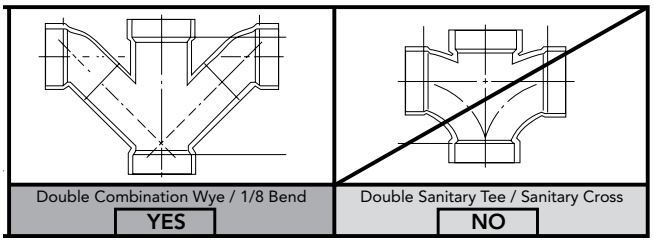

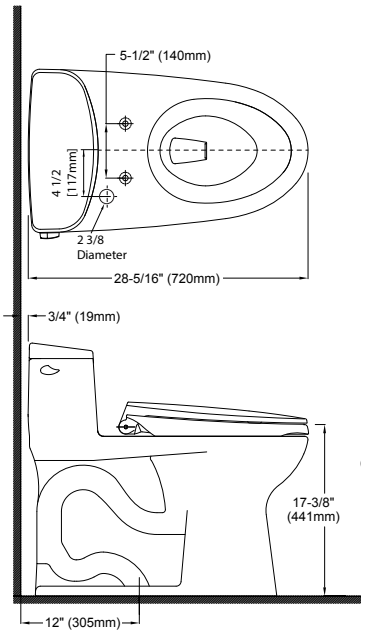

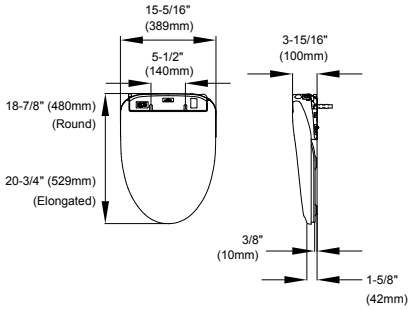

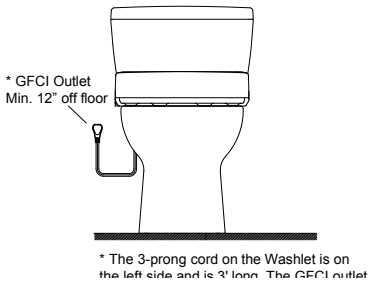

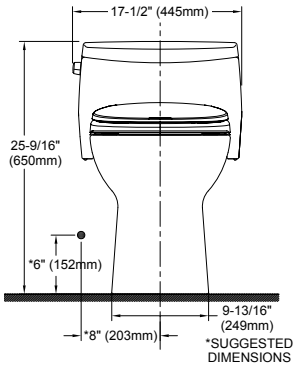

TOTO®

These dimensions and specifications are subject to change without notice