homestyles

20 05525 0851

Daybed

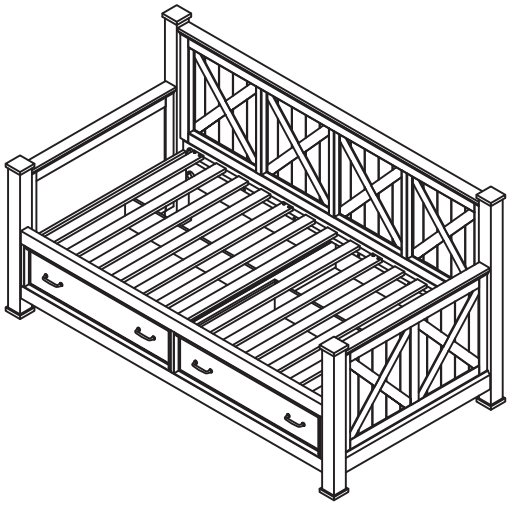

IMPORTANT

Carefully remove all the parts from the carton and place them individually on a soft cloth to prevent scratches or other damage.

Carefully and strictly follow these assembly instructions to ensure a completed product as designed.

Do not use power tools above 8 volts to assemble.

Part List

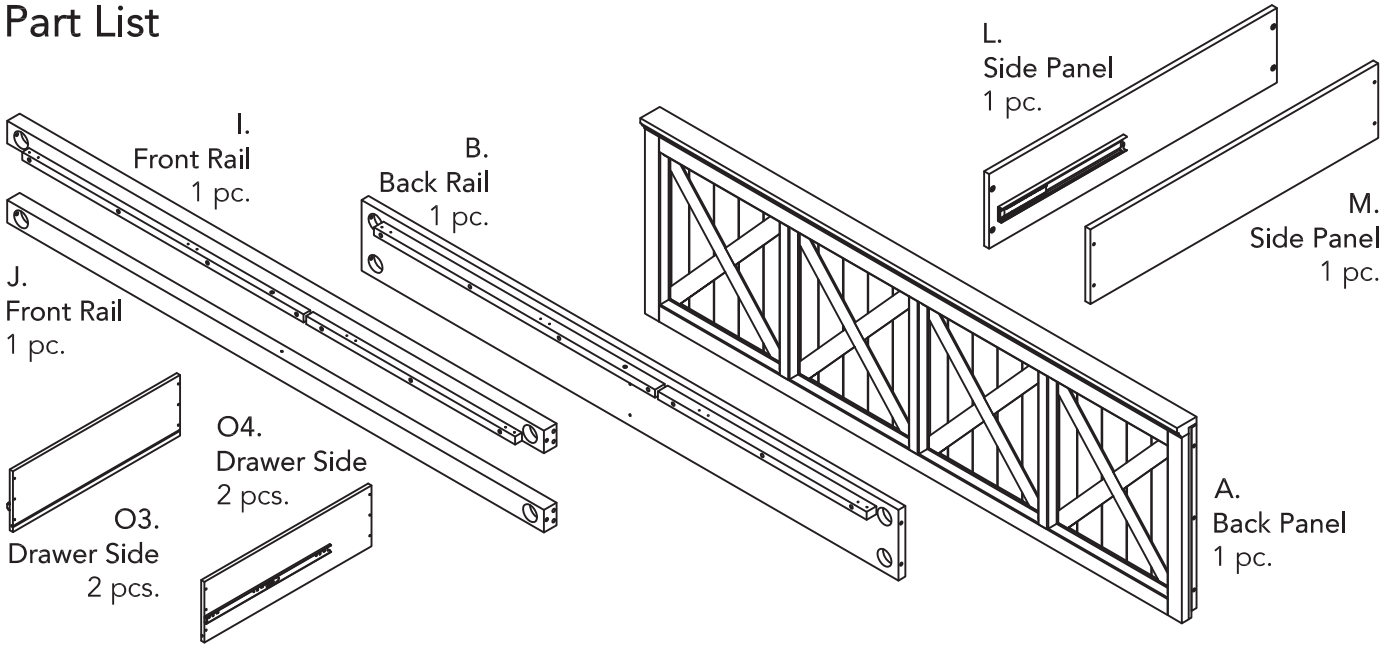

Hardware List

Cam Lock
4 pcs. (+2 extra)

Cam Lock Screw
4 pcs. (+2 extra)

M6x40
Head Cap Bolt
14 pcs. (+1 extra)

Spring Washer
6 pcs. (+1 extra)

Flat Washer
6 pcs. (+1 extra)

Hex Wrench
1 pc.

Small Wrench
1 pc.

M4x38
1 1/2" Round Head Screw
2 pcs. (+1 extra)

M4x25
1" Round Head Screw
16 pcs. (+1 extra)

M3x13
1/2" Round Head Screw
6 pcs. (+1 extra)

M3x32
1 1/4" Flat Head Screw
32 pcs. (+1 extra)

M3x19
3/4" Flat Head Screw
12 pcs. (+1 extra)

5/16"x3 1/8"
Bolt
8 pcs. (+1 extra)

Square Washer
8 pcs. (+1 extra)

Nut
8 pcs. (+1 extra)

Wrench
1 pc.

M4x7/8"
Machine Screw
8 pcs.

Handle
4 pcs.

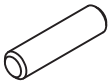
Dowel (large)
8 pcs. (+1 extra)

Dowel (small)
4 pcs. (+1 extra)

Cartons 20 05525 0852 and 0853 are also needed for assembly.

Tool(s) required for assembly: Phillips screwdriver, Level

Home Styles Customer Service: www.homestyles-furniture.com, servicedesk@homestyles-furniture.com, 888-680-7460, 877-831-0319

IMPORTANT

- Use a soft cloth between these parts and the floor.
- Do not use power tools above 8 volts to assemble.
- Do not tighten all the bolts until each part is properly assembled.
- The unit must be level to work properly. Use the included adjustable levelers to level.
- Keep Hex Wrench and Wrench as the bolts and nuts may need to be tightened in the future.

STEP 1

Insert Bolts into pre-drilled holes in Back Posts (C), (D) and Front Posts (F), (G), then tighten.

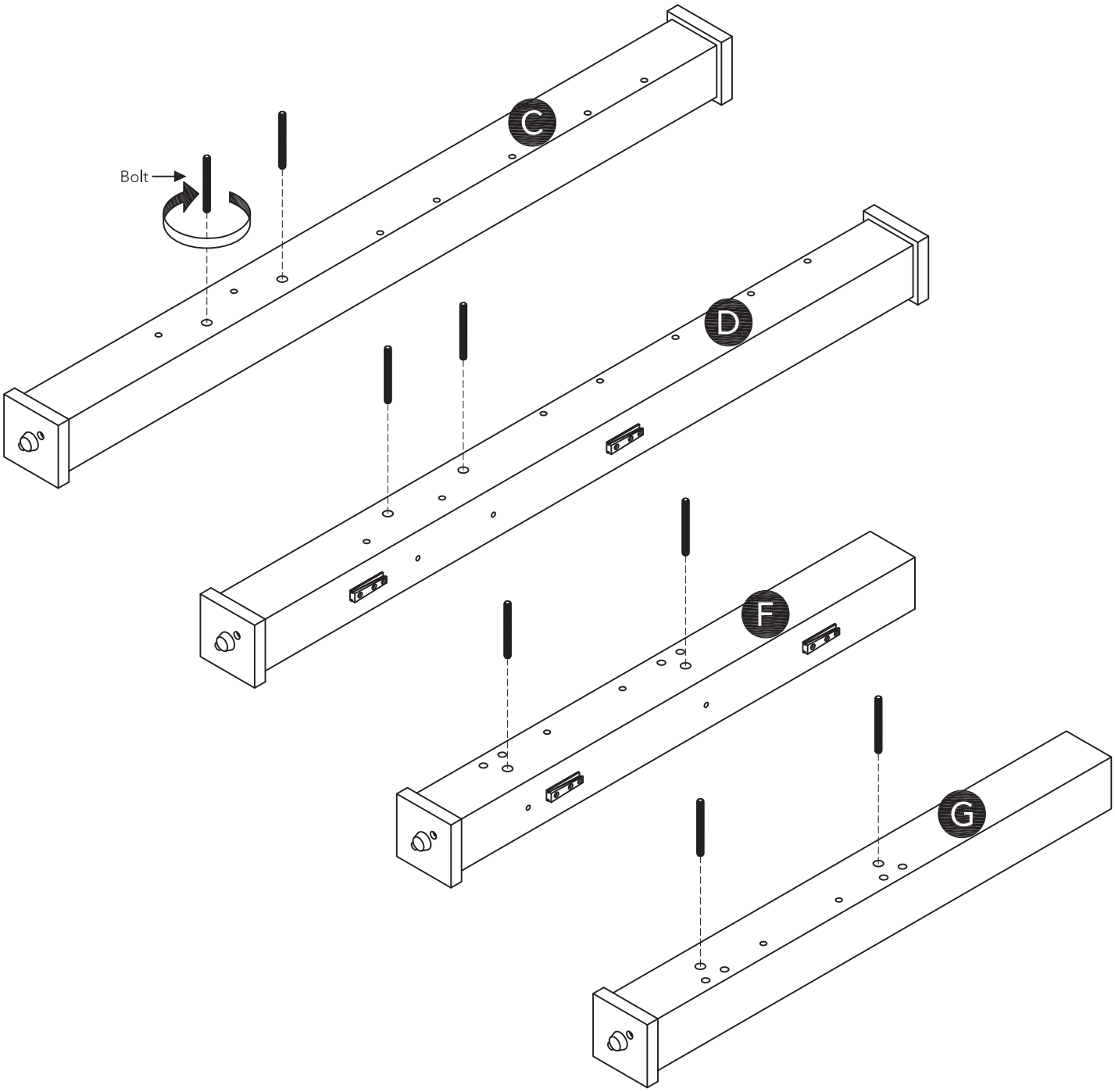

STEP 2

Attach Back Post (C) to Back Panel (A) and Back Rail (B) with Dowels (small), Square Washers and Nuts.

Attach Back Post (D) to unit with Dowels (small), Square Washers and Nuts.

Tighten Nuts with Wrench. (See Figure 1)

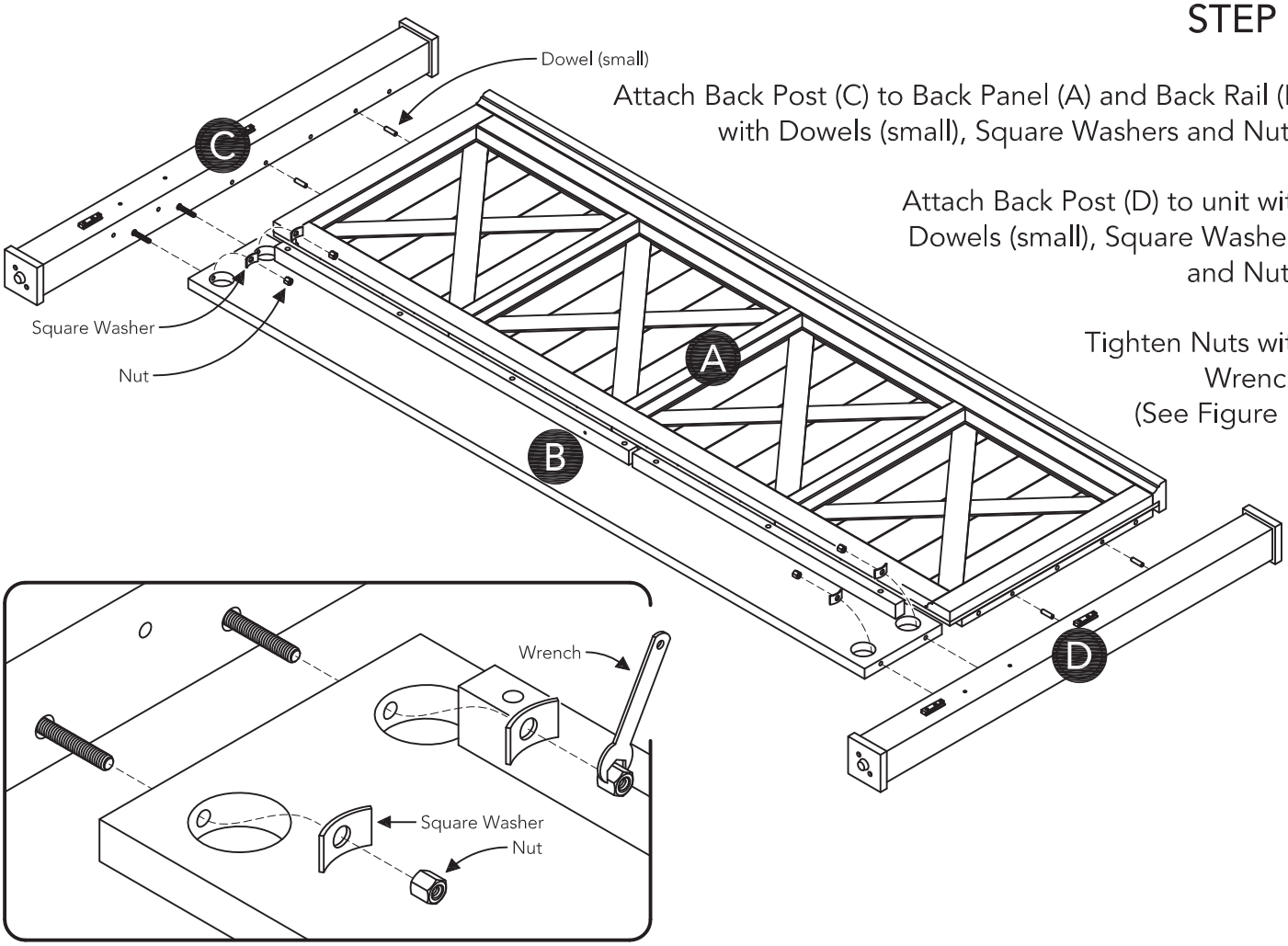

Figure 1

STEP 3

Turn unit over.

Insert Head Cap Bolts, Spring Washers and Flat Washers into unit.

Tighten Head Cap Bolts with Hex Wrench. (See Figure 2)

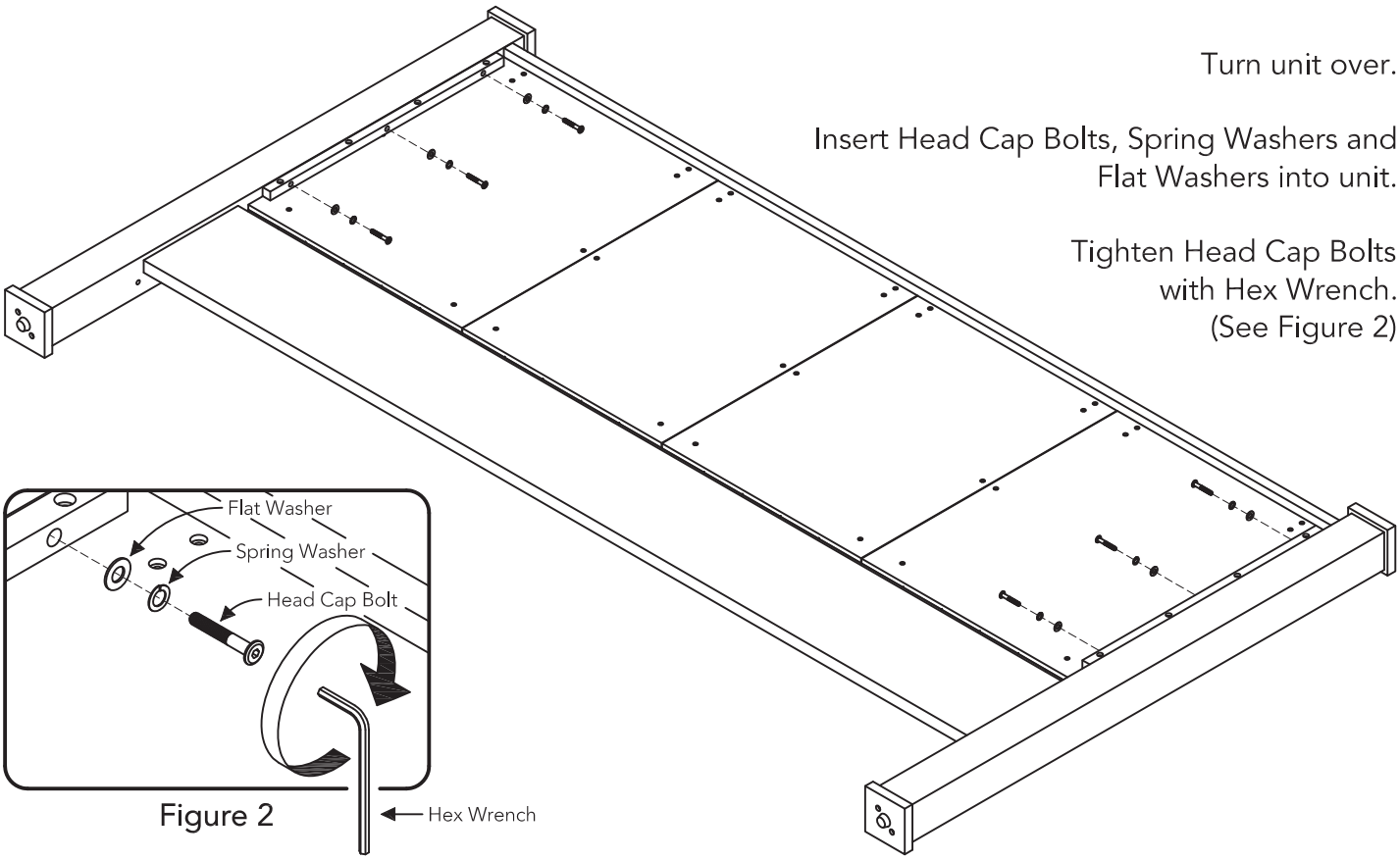

Figure 2

STEP 4

Insert Cam Lock Screws into pre-drilled holes in unit and Front Rails (I), (J).

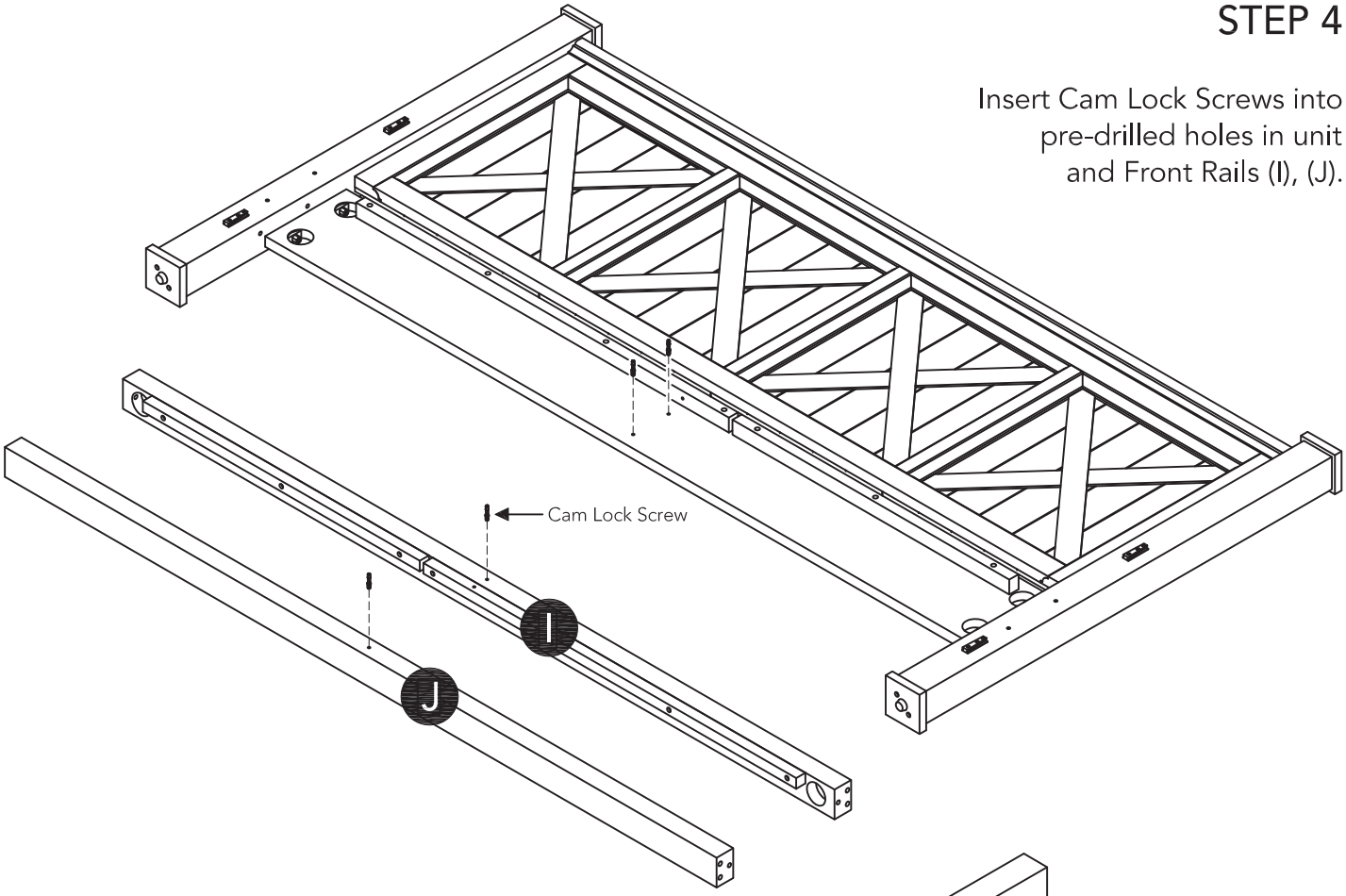

STEP 5

Attach Front Rails (I) and (J) to Middle Panel (N) with Cam Locks. (See Figure 3)

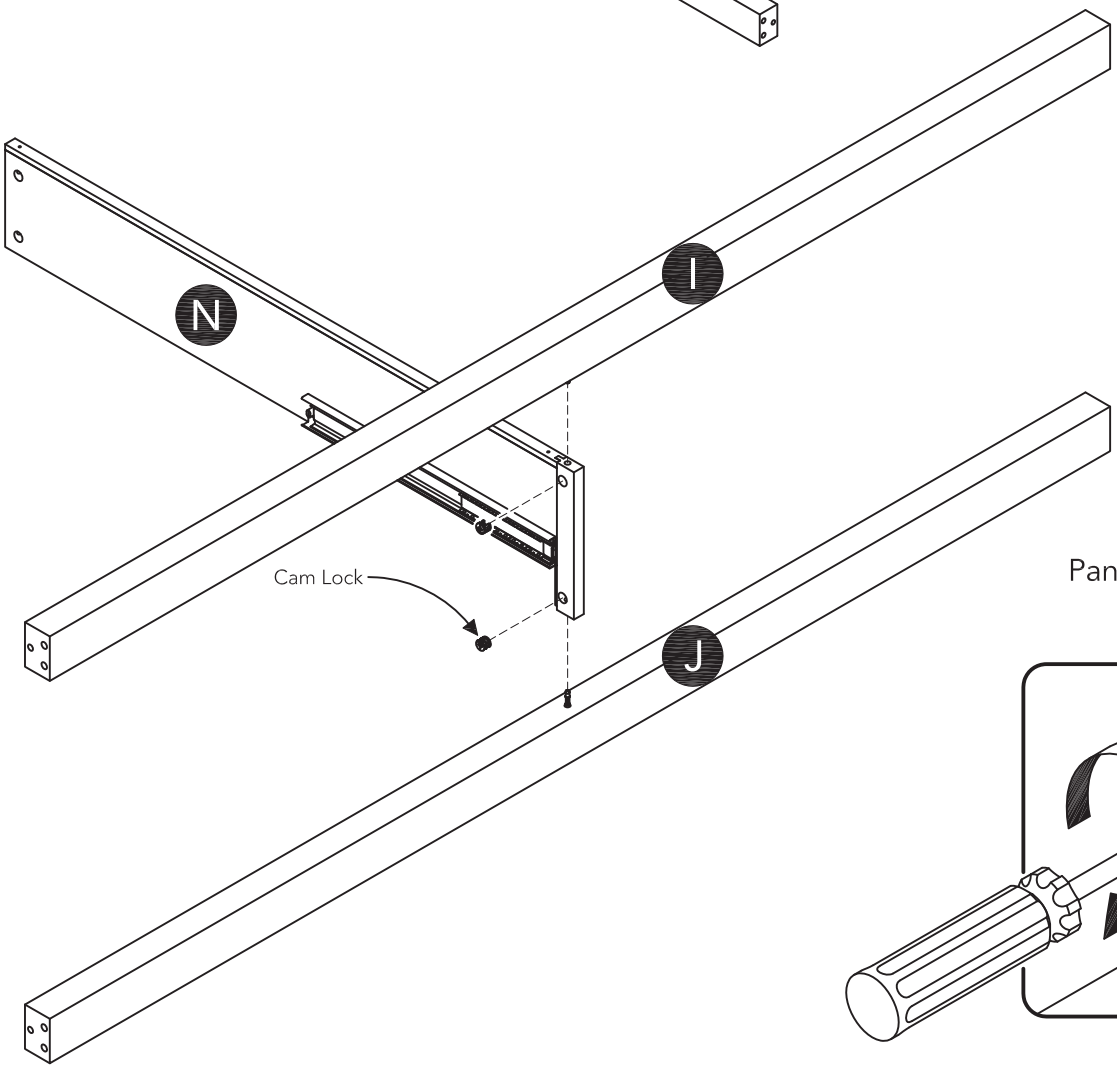

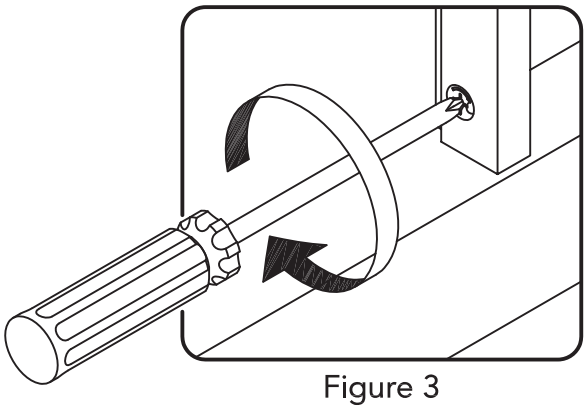

Figure 3

STEP 6

Attach Front Posts (F) and (G) to unit with Square Washers, Nuts and Dowels (large).

Tighten Nuts with Wrench. (See Figure 4)

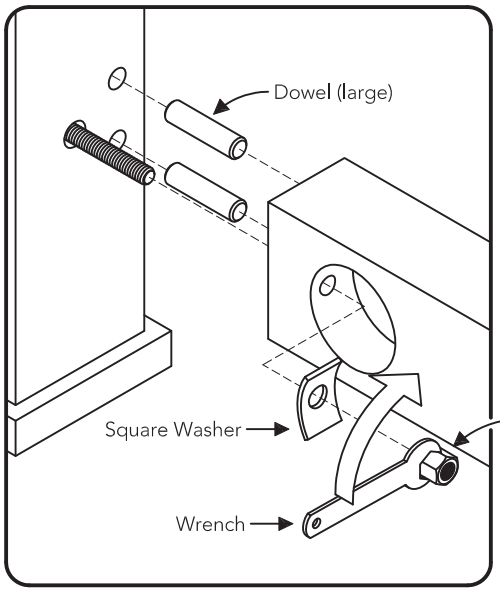

Figure 4

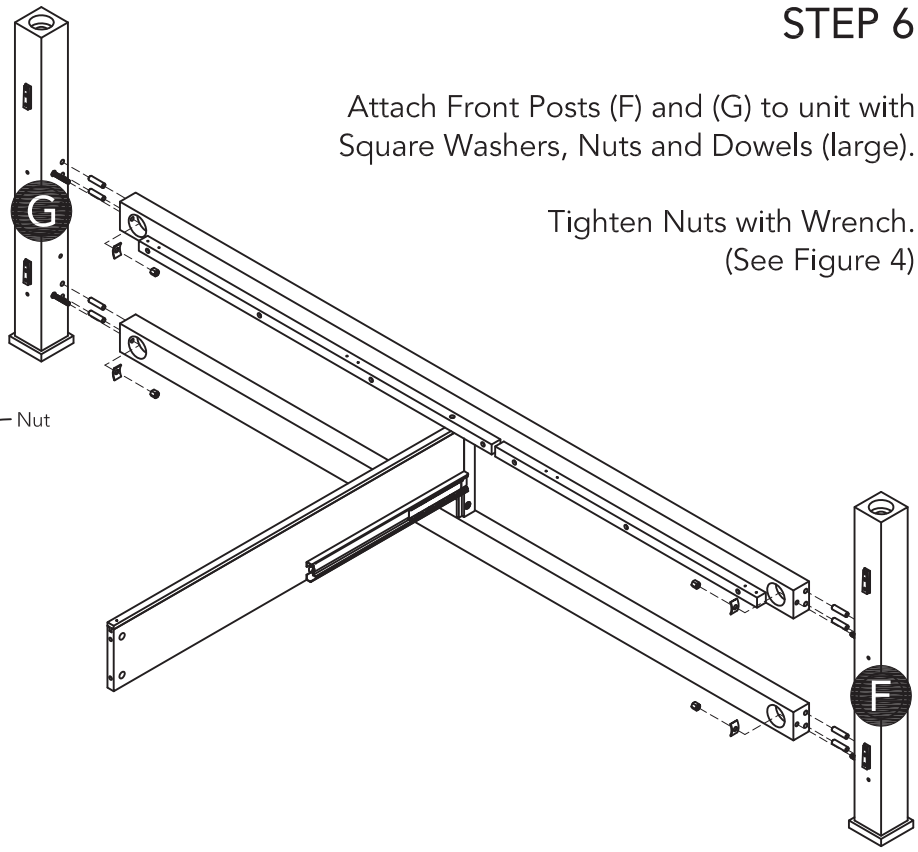

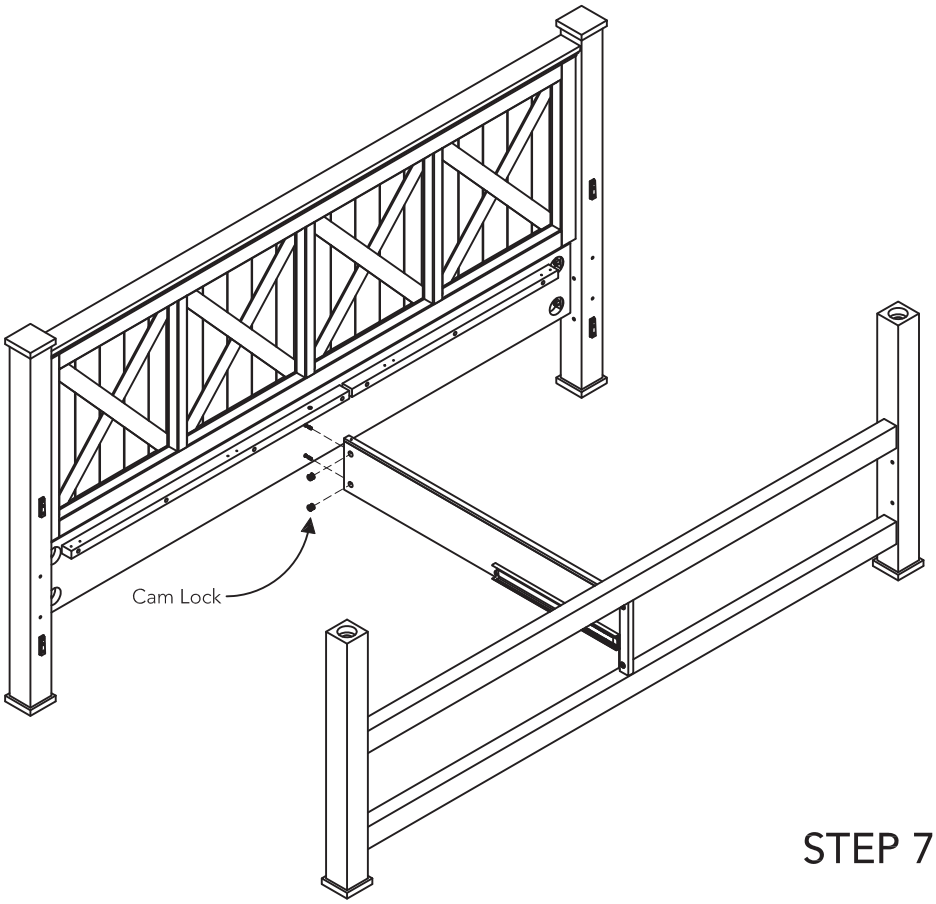

STEP 7

Attach unit from Step 3 to unit from Step 5 with Cam Locks. (See Figure 5)

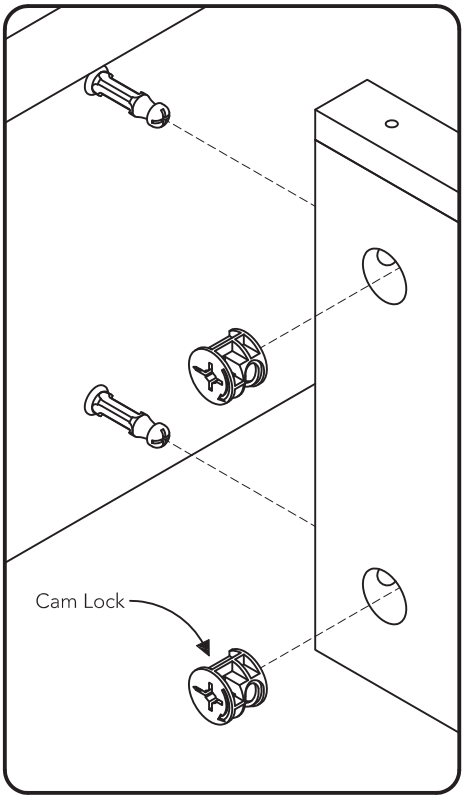

Figure 5

STEP 8

Attach Side Panels (E) to unit by sliding metal sleeves on Side Panels (E) onto metal clips on unit. (See Figure 6)

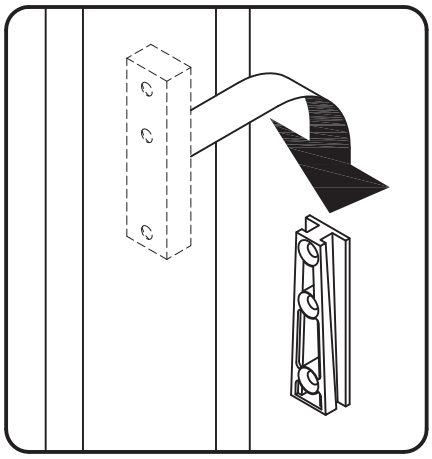

Figure 6

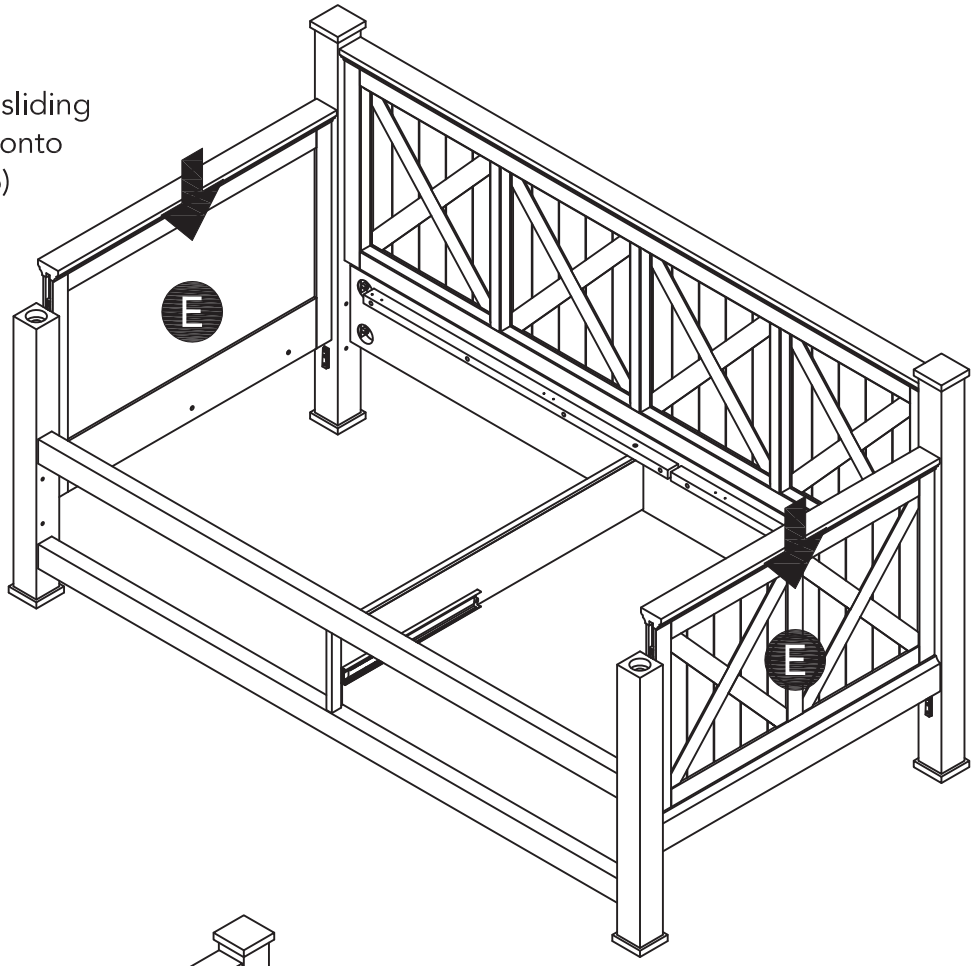

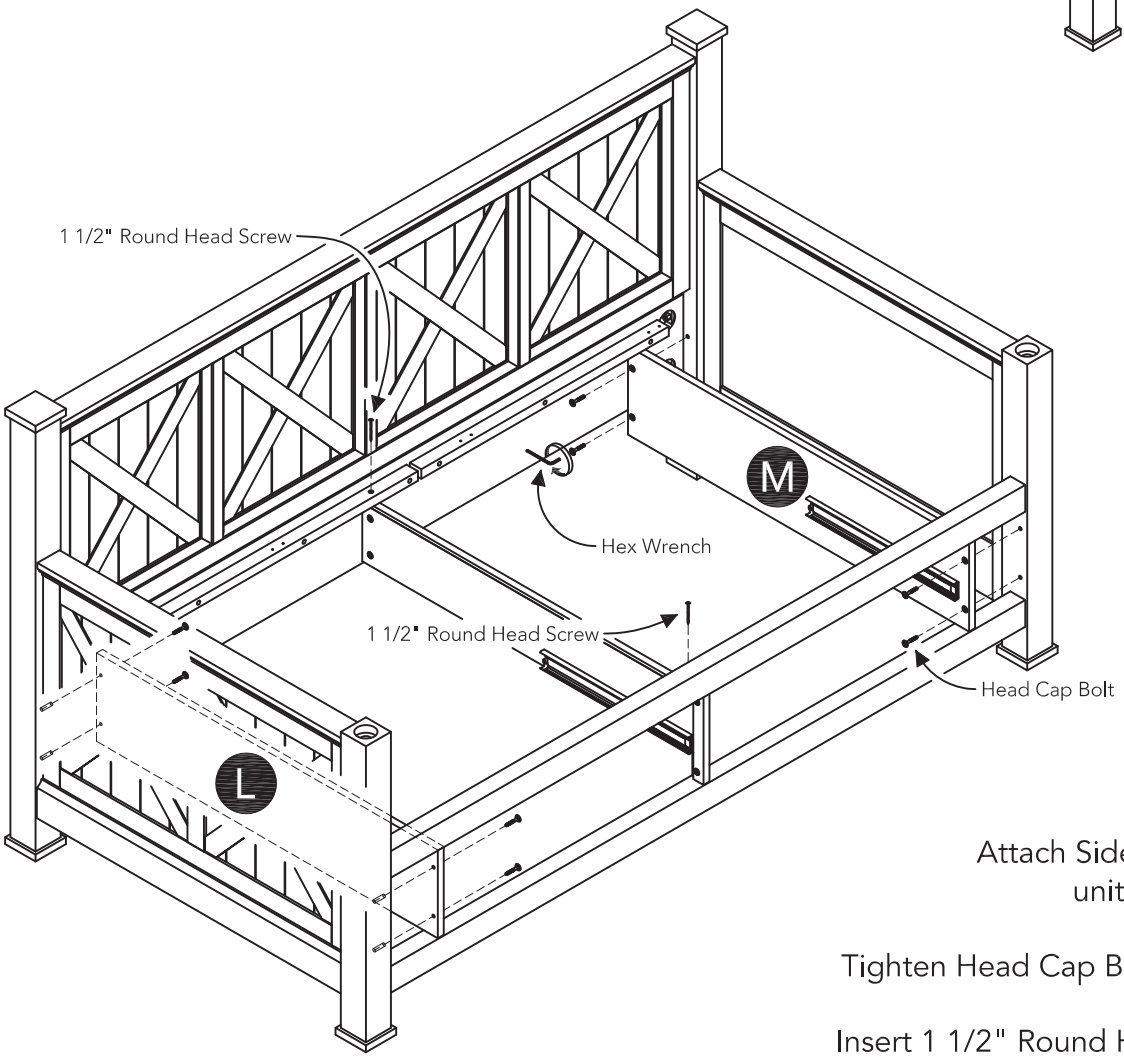

STEP 9

Attach Side Panels (L) and (M) to unit with Head Cap Bolts.

Tighten Head Cap Bolts with Hex Wrench.

Insert 1 1/2" Round Head Screws into unit.

STEP 10

Attach Post Caps (H) to unit. (See Figure 7)

Attach Slat (K) to unit with 1" Round Head Screws into pre-drilled holes in unit.

Level unit by adjusting the adjustable levelers on bottom of unit. (See Figure 8)

Note: Unit must be level to work properly.

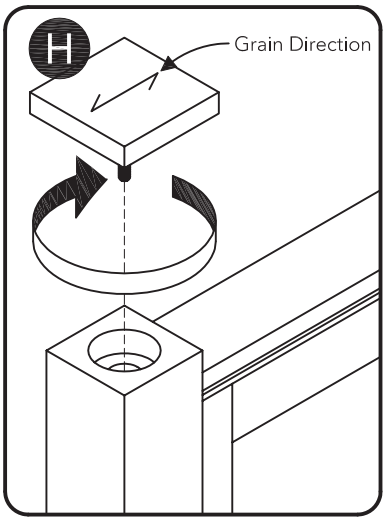

Figure 7

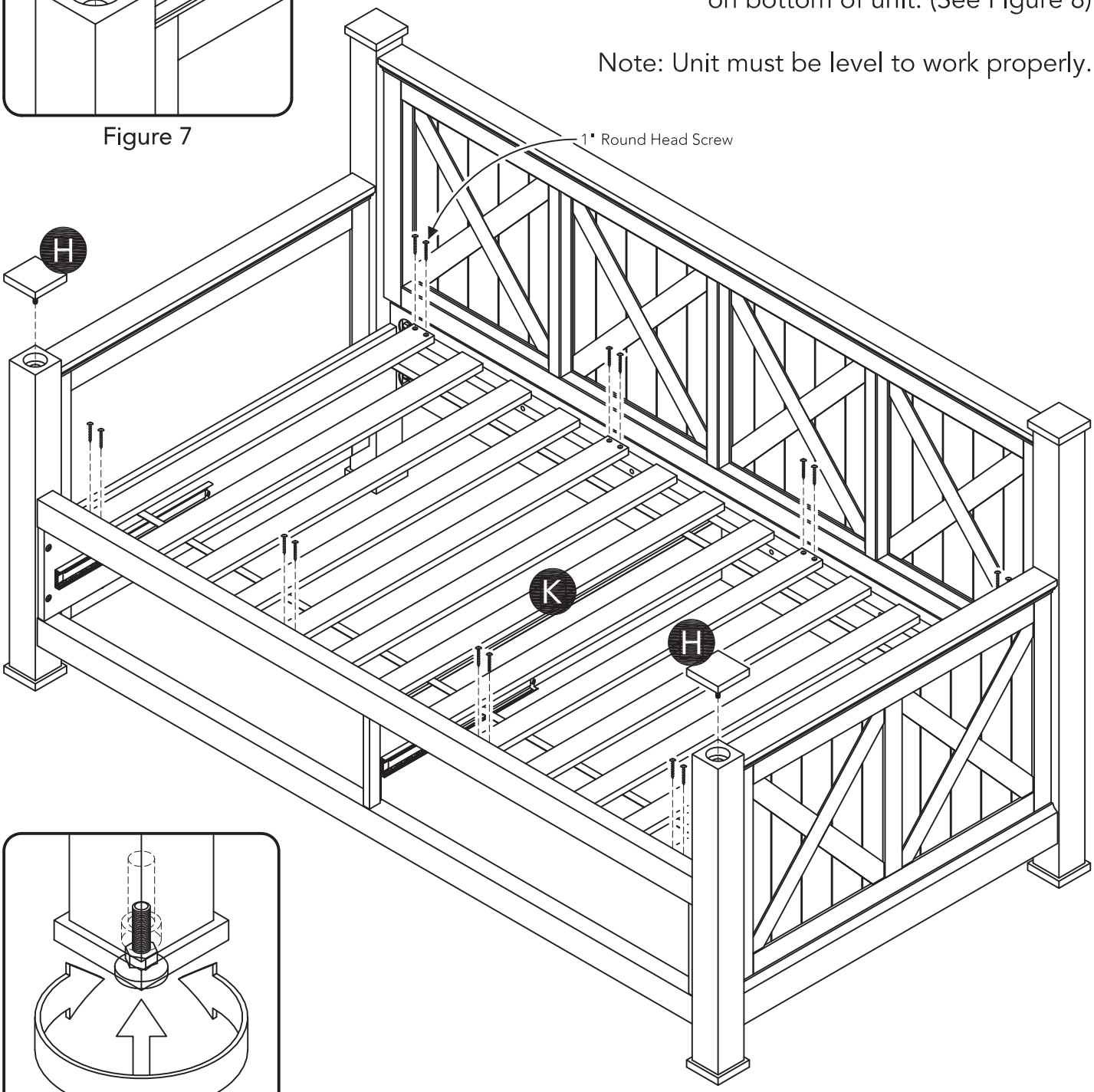

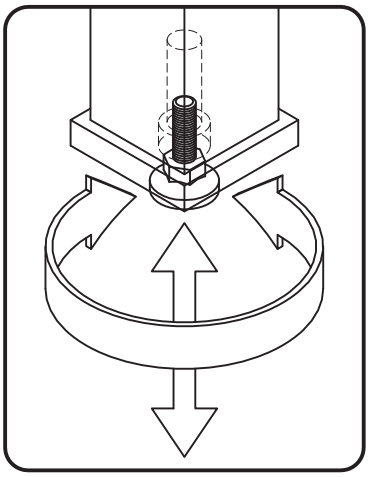

Figure 8

Drawer (O)

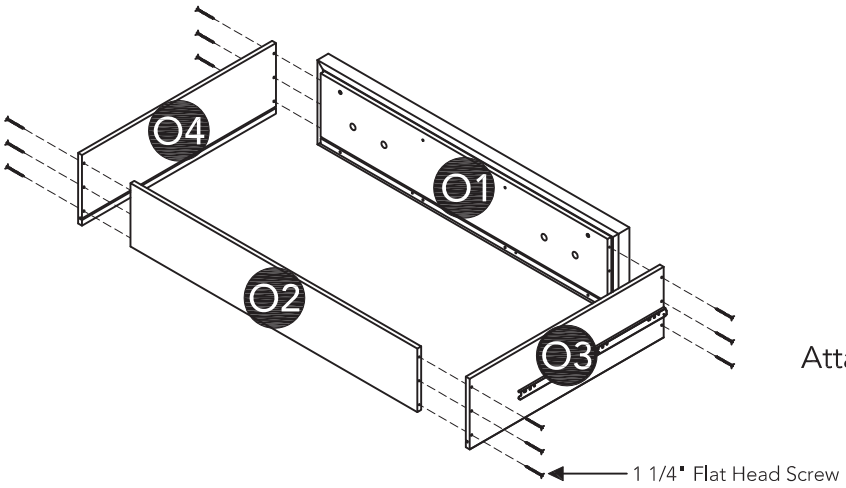

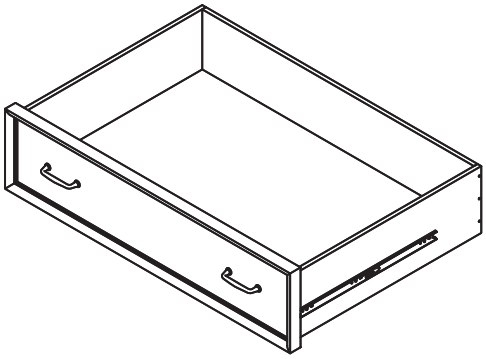

STEP 11

Attach Drawer Sides (O3) and (O4) to Drawer Front (O1) and Drawer Back (O2) with 1 1/4" Flat Head Screws.

STEP 12

Insert Drawer Bottom (O5) into groove.

Attach Supports (O6) to unit with 1 1/4" Flat Head Screws.

Insert 1/2" Round Head Screws into Drawer Bottom (O5).

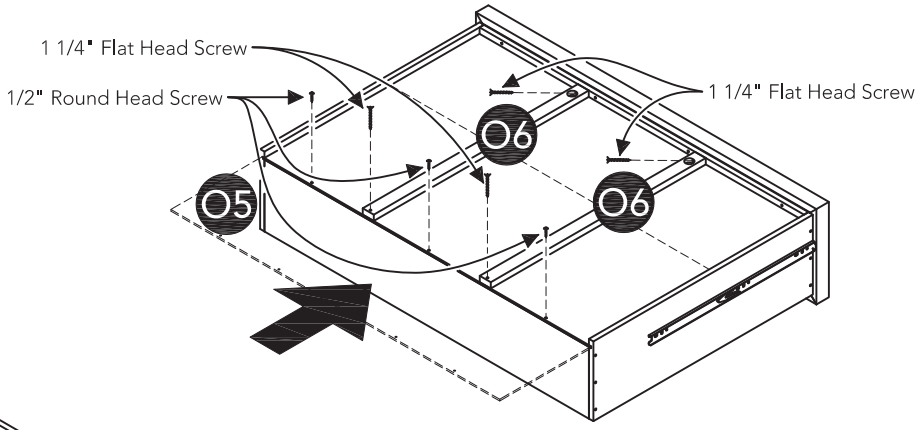

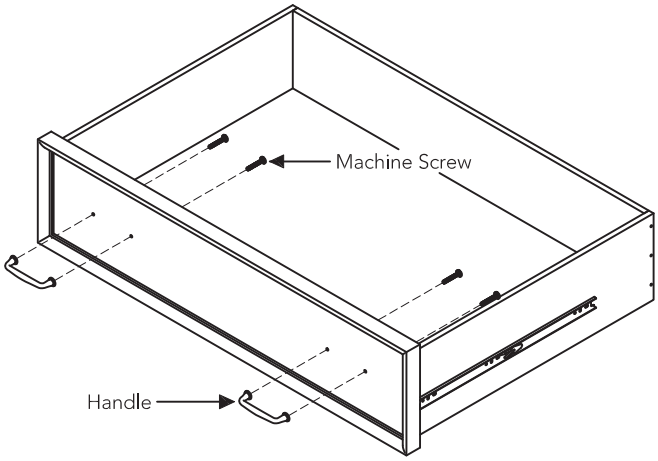

STEP 13

Attach Handles with Machine Screws.

Note: Drawer assembly is not complete until 3/4" Flat Head Screws are used in a later step.

Part List

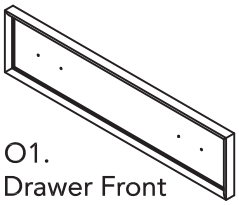

O1.
Drawer Front
2 pcs

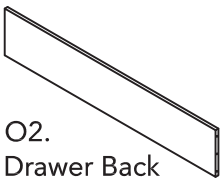

O2.
Drawer Back
2 pcs.

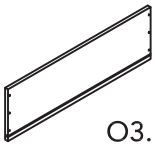

O3.
Drawer Side
2 pcs.

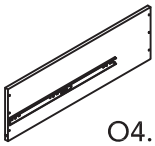

O4.
Drawer Side
2 pcs.

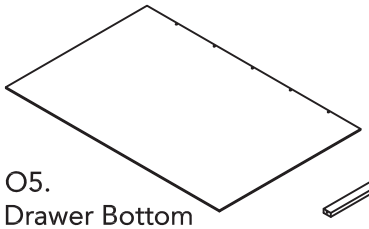

O5.
Drawer Bottom
2 pcs.

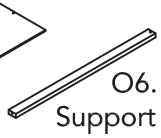

O6.
Support
4 pcs.

STEP 14

Loosen slightly screws pre-installed on back of drawer fronts.

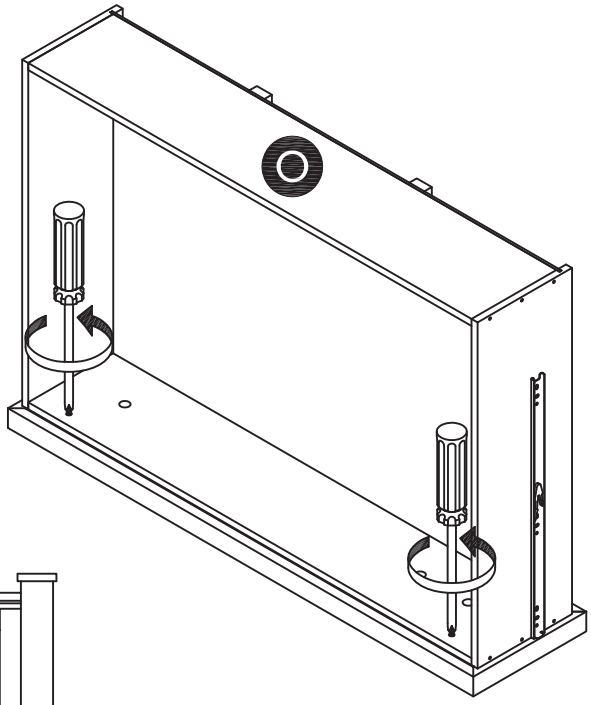

STEP 15

Align metal runners on sides of Drawers (O) into metal guides on unit and slide Drawers (O) into unit.

Adjust drawer front panels left or right and up or down until gaps look proportional.

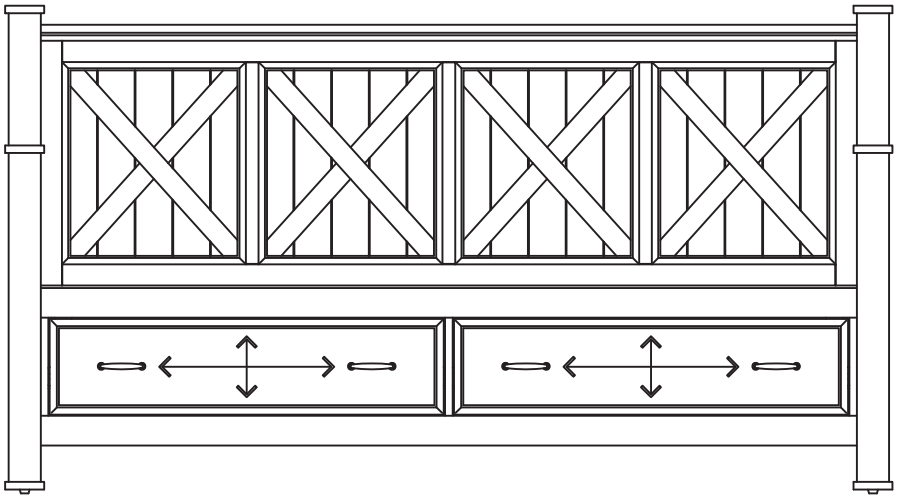

STEP 16

Pull each drawer open slowly and re-tighten screws from Step 14.

Make sure drawer front panels do not move and remove each drawer by pushing plastic lever on left side up, pushing plastic lever on right side down, and pull open. (See Figures 9 and 10)

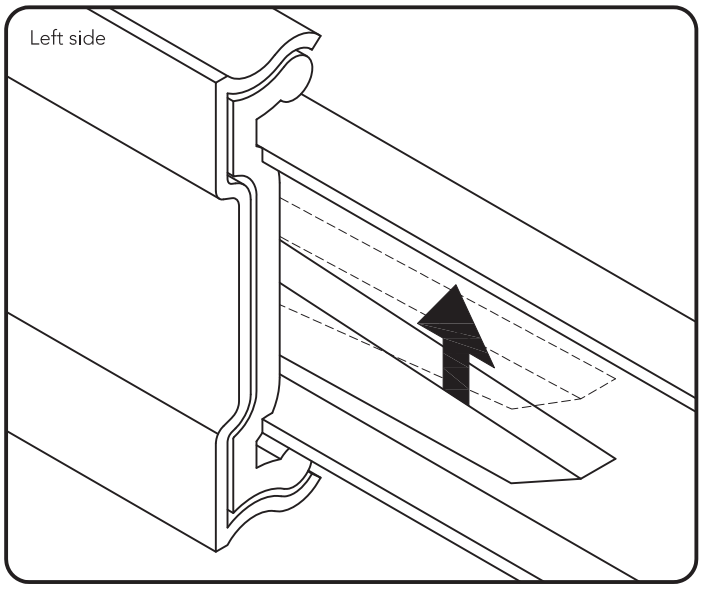

Figure 9

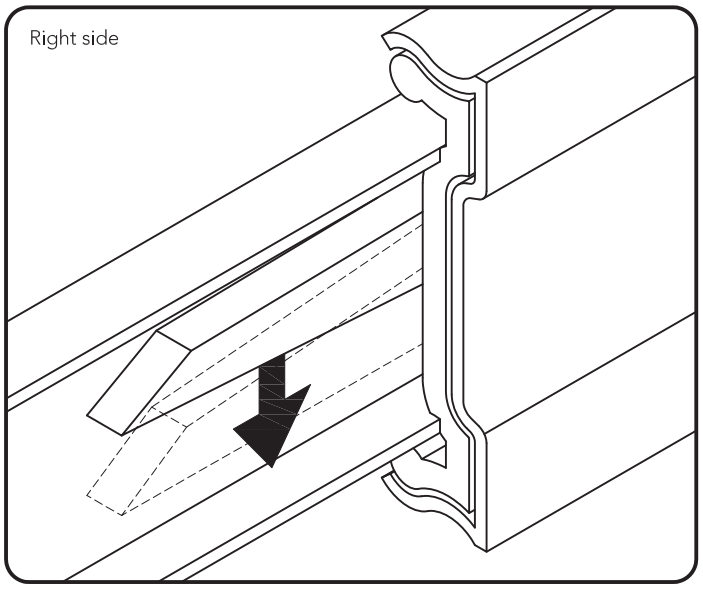

Figure 10

STEP 17

Lock each drawer front panel into position with 3/4" Flat Head Screws.

Note: These 3/4" Flat Head Screws must be installed to complete the drawer assembly.

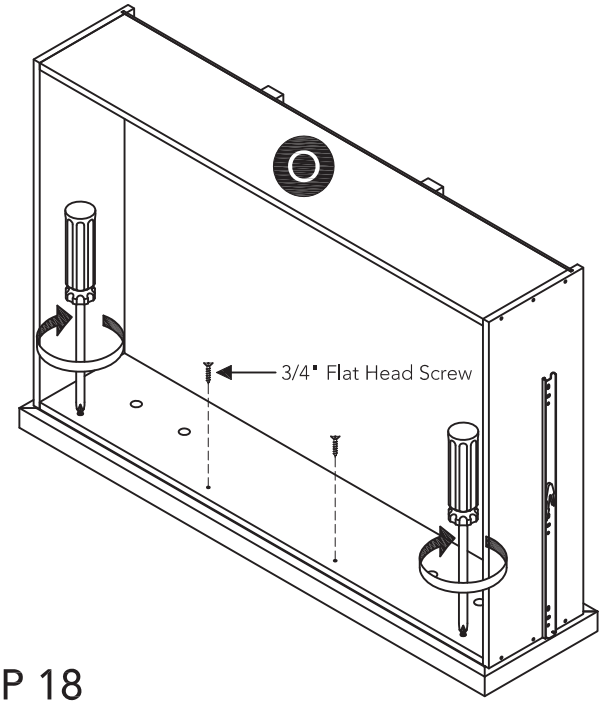

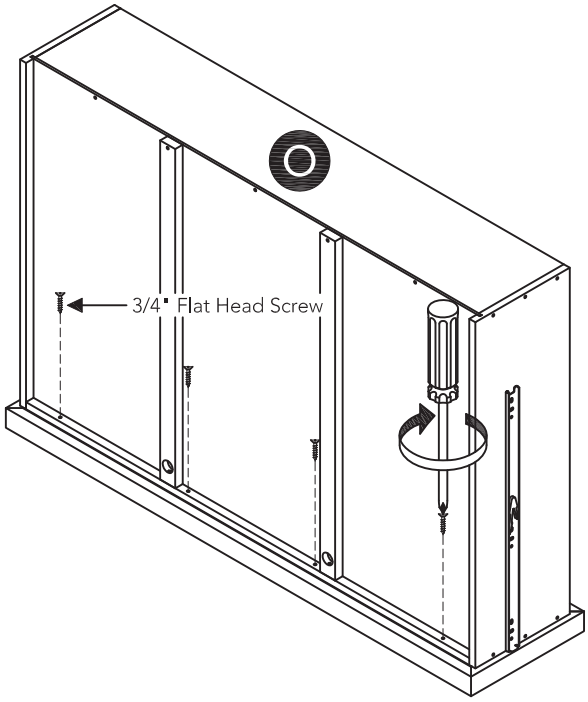

STEP 18

Align metal runners on sides of Drawers (O) into metal guides on unit and slide Drawers (O) into unit.

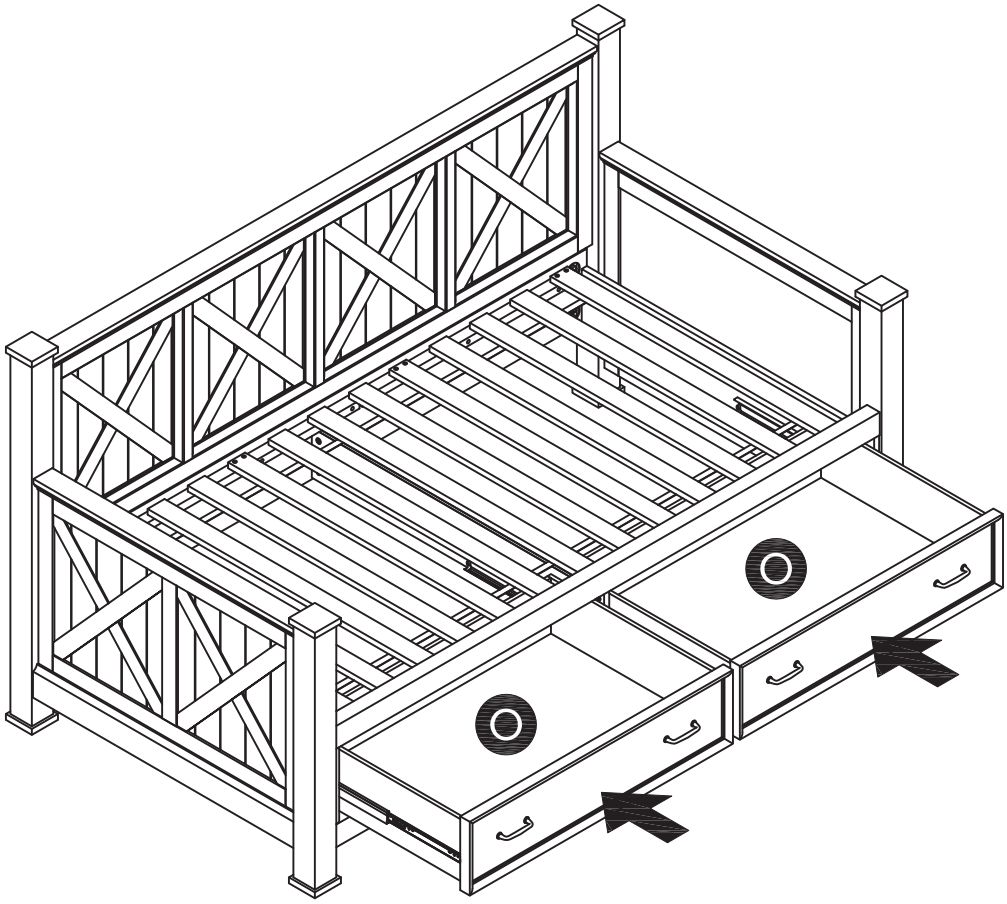

CARE INSTRUCTIONS

NEVER

allow liquids to remain on furniture. Absorption causes parts to warp and split and finishes to delaminate.

NEVER

use glass cleaners on finished furniture. Ammonia chemically attacks the finish.

Do not use power tools above 8 volts to assemble.

PREVENT CRACKING

Do not place in direct sunlight.

PREVENT FADING

Do not write directly on surface.

PREVENT MARKING

Do not place hot objects on surface.

PREVENT FINISH DAMAGE

Do not use rubber based placemats.

PREVENT DISCOLORING

Do not use commercial waxes and polishes.

PREVENT YELLOWING

CLEAN

with a soft cloth moistened in lukewarm soap and water. Buff with a dry clean cloth.

Home Styles will provide replacements free of charge for missing or damaged hardware or parts within 30 days of purchase. Digital images of the defective parts may be required. If the product was not purchased from an authorized retail affiliate, Home Styles is under no obligation to provide replacement parts. Parts are not available for fully assembled items nor are parts available for sale. Replacements for missing or damaged hardware or parts may be requested at: www.homestyles-furniture.com/customer-service/replacement-parts

Home Styles Customer Service: www.homestyles-furniture.com, servicedesk@homestyles-furniture.com, 888-680-7460, 877-831-0319