FB4641,5,8CKL
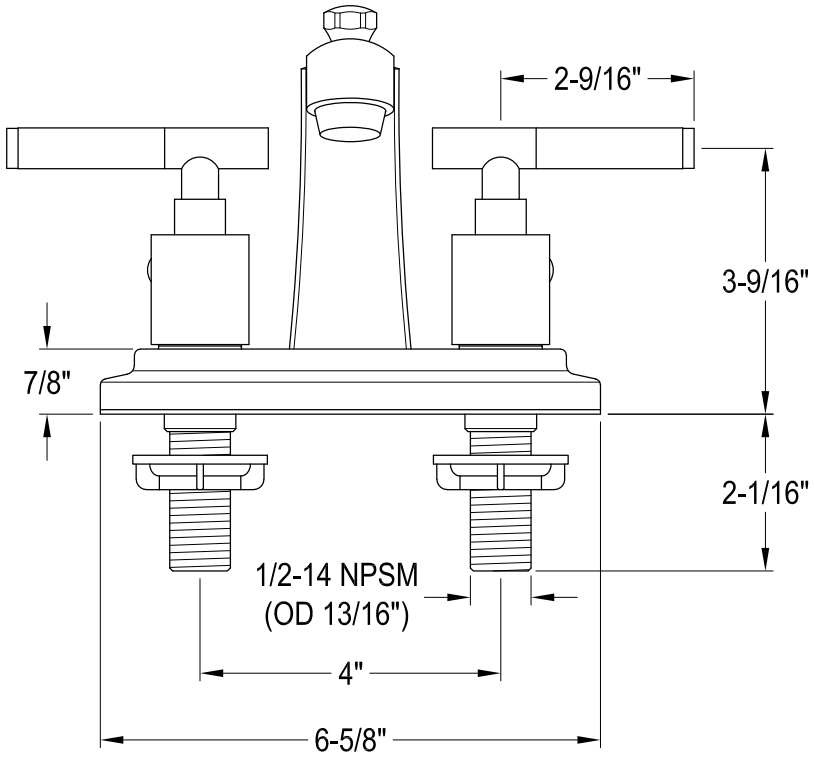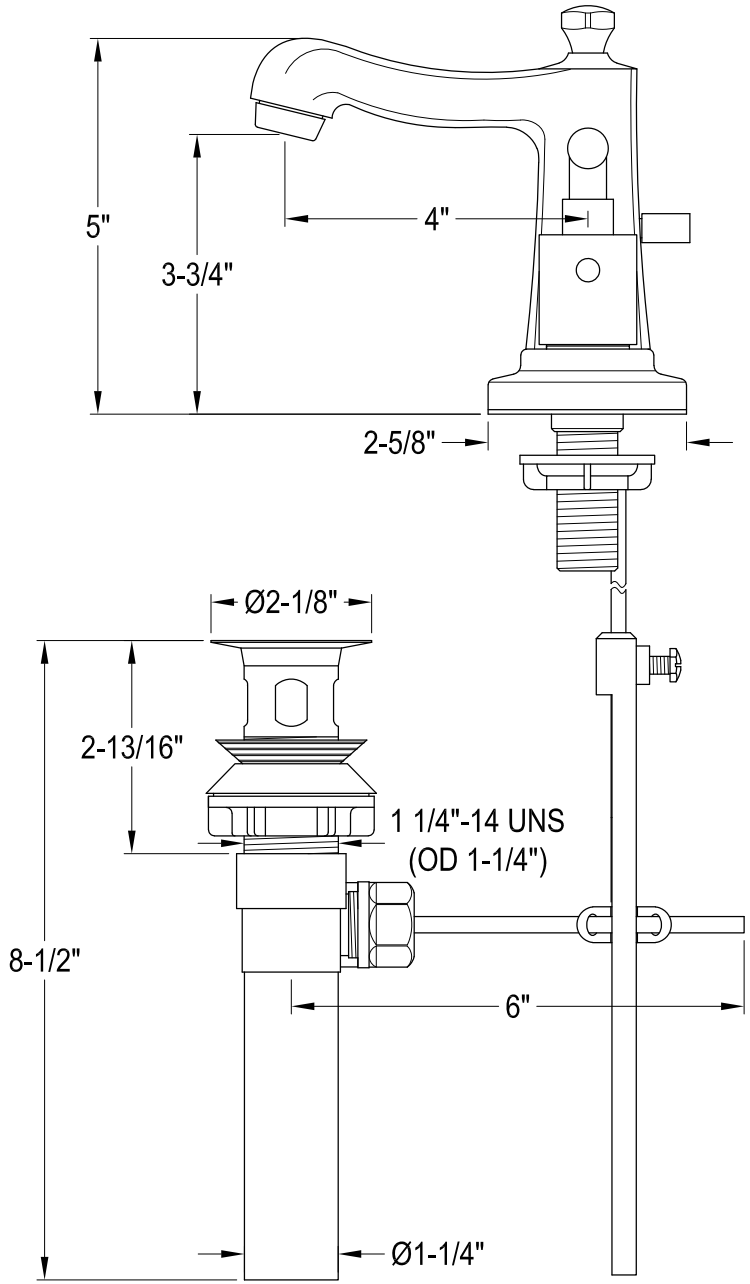
Twin Handles 4" Centerset Lavatory Faucet with Retail Pop-Up