teamson®
home

Extended Warranty
Sign Up

E-1

Welcome home!

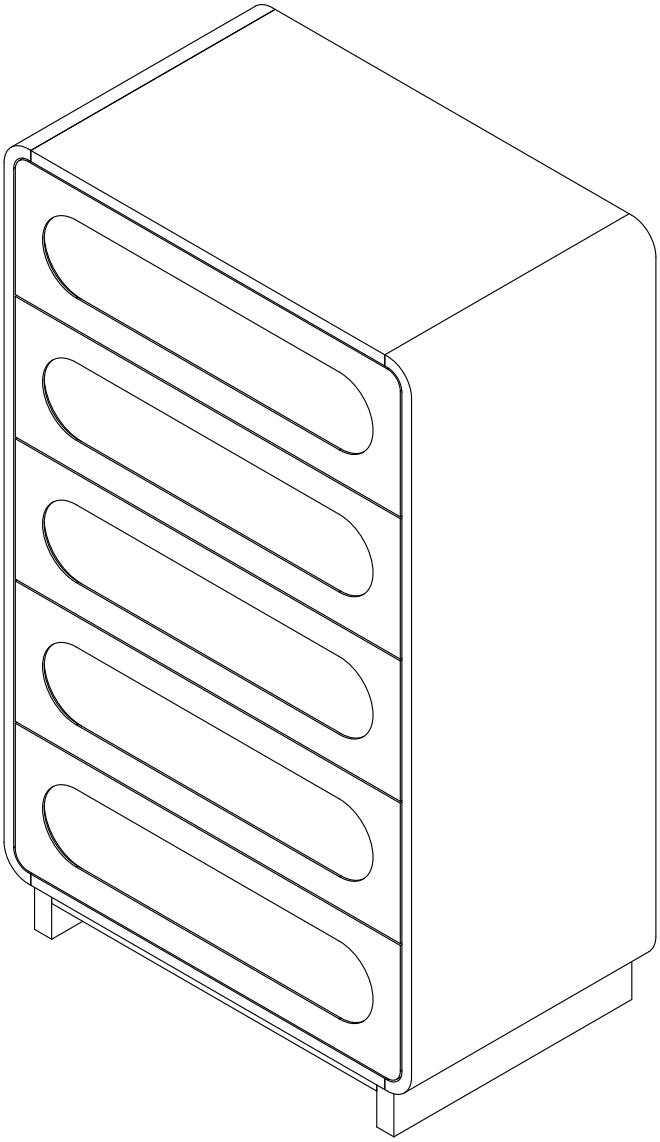

THF1425NA
THF1425WT

TEAMSON HOME
Tenley 5-Drawer Dresser

www.teamson.com

Warranty

LIMITATIONS
All components are warranted by the manufacturer for 30 days after the date of purchase by the original owner against defects in materials and workmanship under normal use. If it is appropriate to replace your product due to specific defects, the manufacturer will replace the purchase with the same or comparable product.

GENERAL TERMS & CONDITIONS
1.Proof of purchase is required to request a claim under this warranty.

2.This warranty applies only to manufacturer error and defects. The warranty applies to the following:
a.Breaks and cracks in the product that originated with the manufacturer.
b.Missing pieces.
c.Stains that occurred during the manufacturing process.

3.This warranty does not apply to the following:
a.Damage due to improper loading, handling, or transportation.
b.Any costs associated with the installation and removal of products or parts subject to this warranty.
c.Acts of God.
d.Products which have been subject to negligence, abuse, accident, misapplication, tampering, alteration, or modification.
e.Products which have been subject to improper installation, operation, maintenance, repair, or storage.
f.Products which have been subject to defects that occur when this product is used incorrectly and /or outside of normal application purposes.
g.Products that have had, including but not limited to, operational failures caused by corrosion, rust, or other foreign materials in the system, or operation at pressures over recommended maximums.
h.All other possible defects not mentioned here that would not have occurred during manufacturing or during correct, routing use of the item.

INSTRUCTIONS
For specific instructions on how to obtain warranty service for your product, please contact Global Customer Support using the contact information provided on page 01. In most circumstances, you will need to return your product either in its original packaging or in equally protective packaging to the address specified by Global Customer Support.
Before delivering your product for warranty service, it is your responsibility to remove all personal items and belongings you have stored with our product. Teamson is not responsible for the possible loss, destruction, or damage of any personal items or belongings that have been sent with the product.

DISCLAIMER
Any oral statements made about the product by the seller, the manufacturer, the representatives, or any other parties do not constitute warranties should not be relied upon by the user and are not part of the contract for sale. The seller’s and manufacturer’s only obligation, and buyers only remedy shall be for the manufacturer to either replace and/or repair at the manufacturer's sole discretion, the product as described above. Neither seller not the manufacturer shall be liable for an injury, loss, or damages for lost profits, lost sales, injury to person or property, or any other incidental or consequential loss arising from any cause whatsoever, no matter whether based upon warranty, contract, negligence or other misuse, and the buyer and user agree that no other remedy shall be available to them. Before using the buyer and user shall determine the suitability of the product for intended use and assume all risk and liability whatsoever in connection therewith. The warranty and remedy described in this limited warranty is an exclusive warranty and remedy instead of any other warranty or remedy expressed or implied. All other warranties and remedies are hereby expressly excluded, including but not limited to any implied warranty of merchantability of fitness for any particular purpose.

OTHER LEGAL RIGHTS
The warranty gives the buyer and user specific legal rights, and the buyer and user may also have other rights which vary for state to state. Some states do not allow exclusions or limitations or incidental or consequential damages, so the above limitations or exclusions may not apply to you.

THANK YOU
We appreciate the trust and confidence you have placed in Teamson through the purchase of this product. We strive to continually create quality products designed to enhance your home and life. Visit us online to see our full line of products available for your home décor, toy, and pet needs. Thank you for choosing Teamson!

Global Customer Support

USA / CA

✉ **support@teamson.com**
+1(770) 246-4898
Mon - Fri 9 AM - 4 PM EST

EU / UK

✉ **support@teamson.co.uk**
+44(0)1952-916-050
Mon - Thur 9 AM - 5 PM GMT
Fri 9 AM - 4 PM GMT

ASIA

深圳办公室：
✉ **sales_ec@teamson.com**
+86(0755)8885-3558.分机号108
Mon - Sat 9 AM - 5 PM GMT+8

台北辦公室：
✉ **support@teamson.com.tw**
+886 2 2558 0755 ext. 318
Mon - Fri 9 AM - 5 PM GMT+8

AU

✉ **support@teamson.com.au**

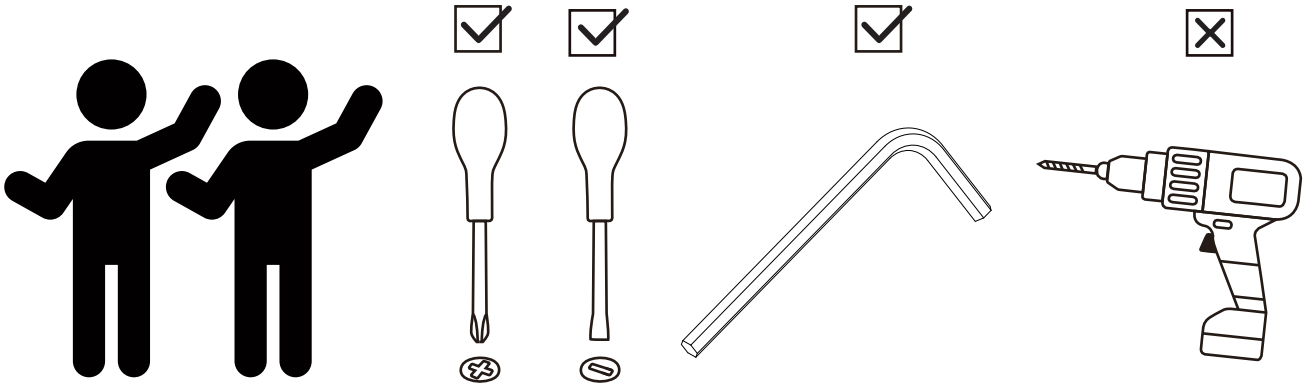

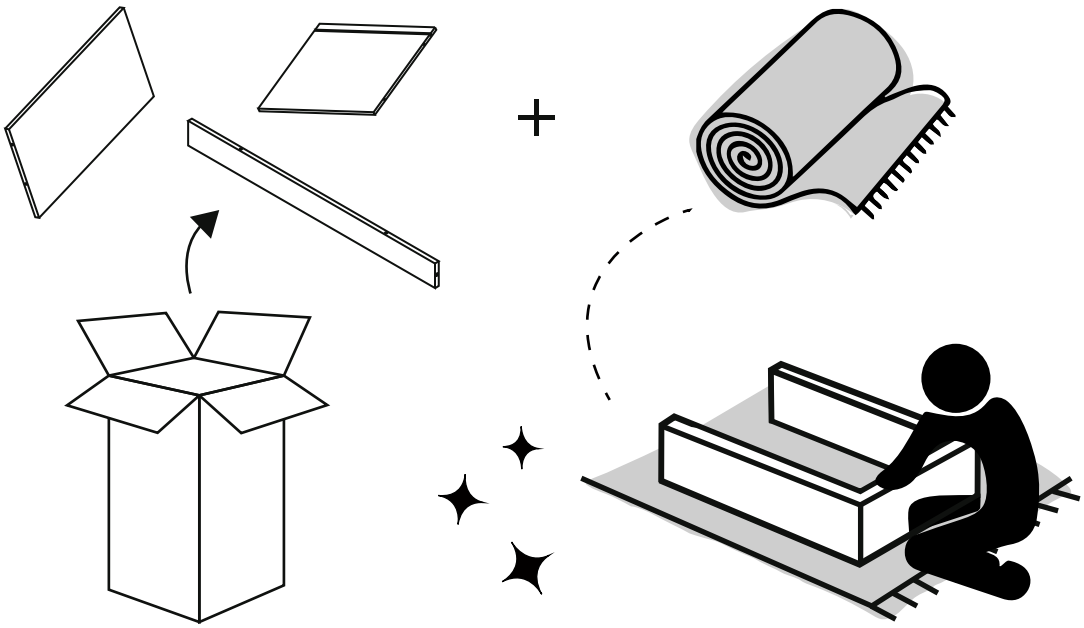

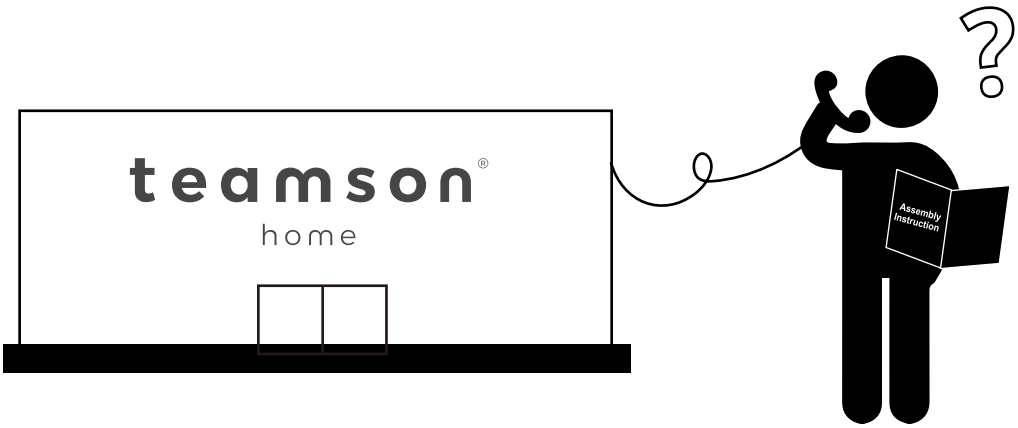

Any questions? Please contact our customer support team by email or phone. We are always ready to assist you! Please have the product item number ready, (located on the first page of this instruction manual) and your order number available.

Exploded Drawing

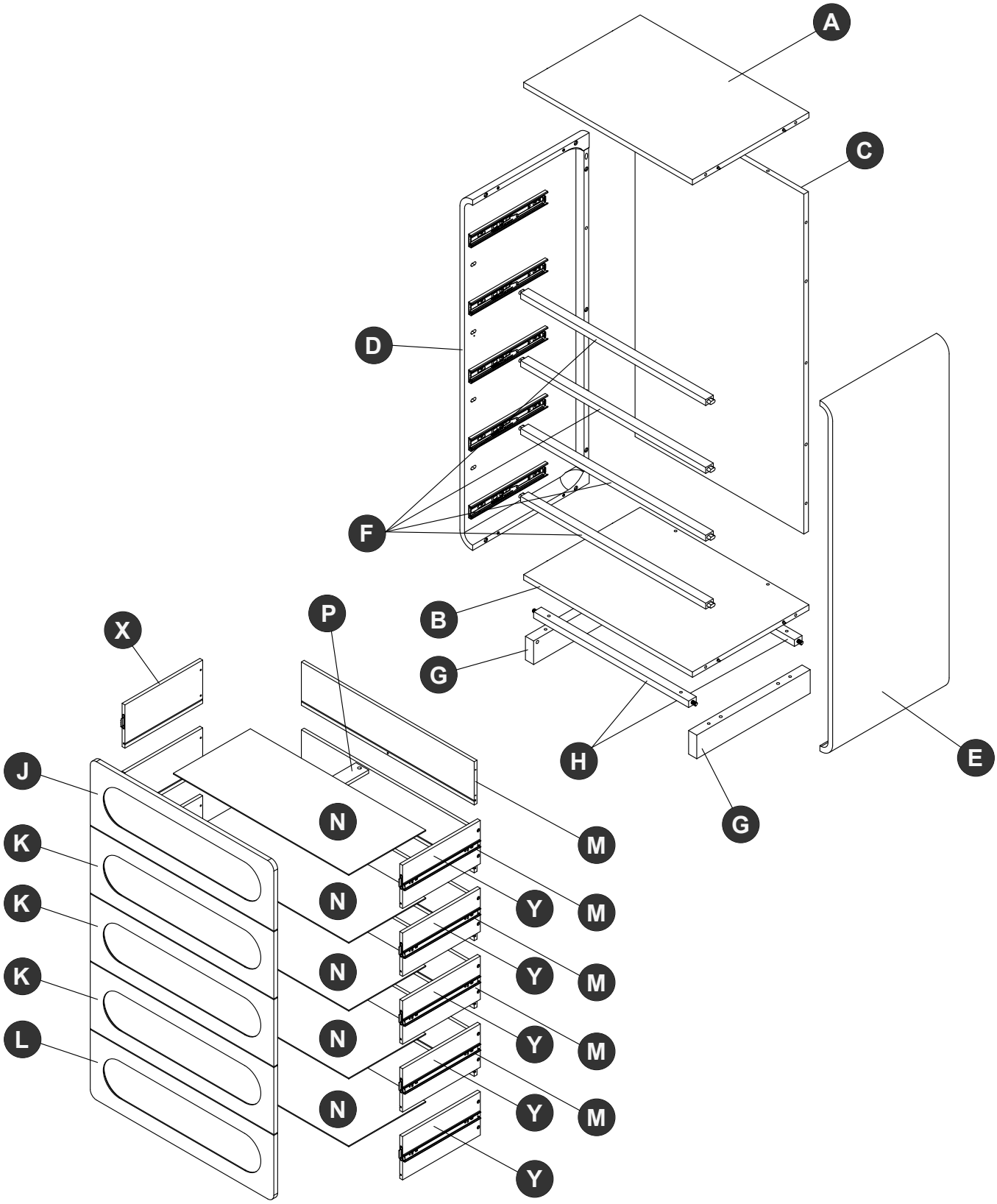

Scan for assembly instructions.

Product Parts

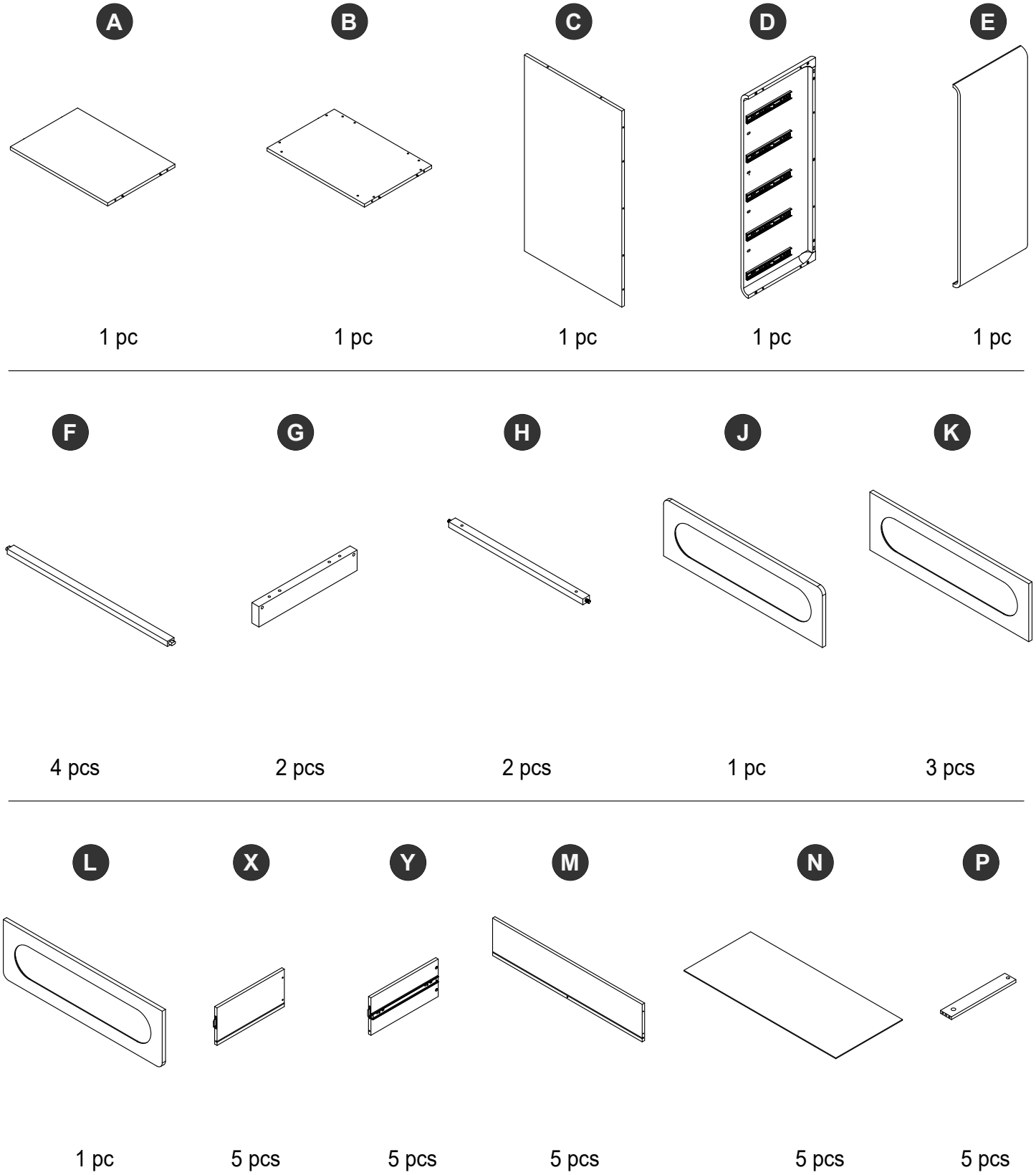

Scan for assembly instructions.

Hardware

1	2	3	4	5
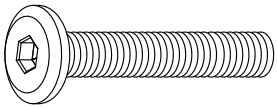	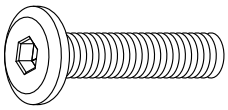	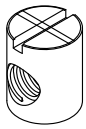	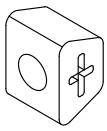	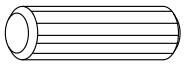
Ø6 * 45mm	Ø6 * 30mm	Ø10 * 13mm	19 * 13 * 11mm	Ø8 * 30mm
22 PCS	4 PCS	2 PCS	16 PCS	8 PCS

6	7	8	9	10	11
		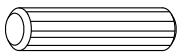		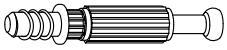	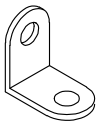
Ø10 * 9mm	Ø4 * 25mm	Ø6 * 20mm	Ø10.5 * 9mm	Ø7 * 44mm	17 * 11 * 17mm
25 PCS	25 PCS	10 PCS	5 PCS	5 PCS	2 PCS

12	13	14	15
	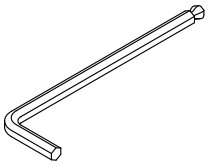	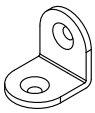	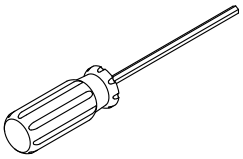
Ø3.5 * 15mm	Ø4 * 110mm	T2 * 22 * 22 * 18mm	Ø4 * 160mm
12 PCS	1 PC	4 PCS	1 PC

NOT INCLUDED

Phillips Screwdriver required:

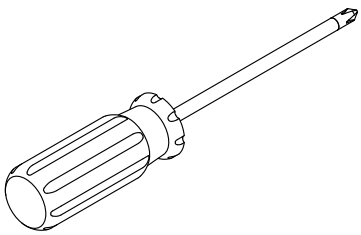

Scan for assembly instructions.

Step 1

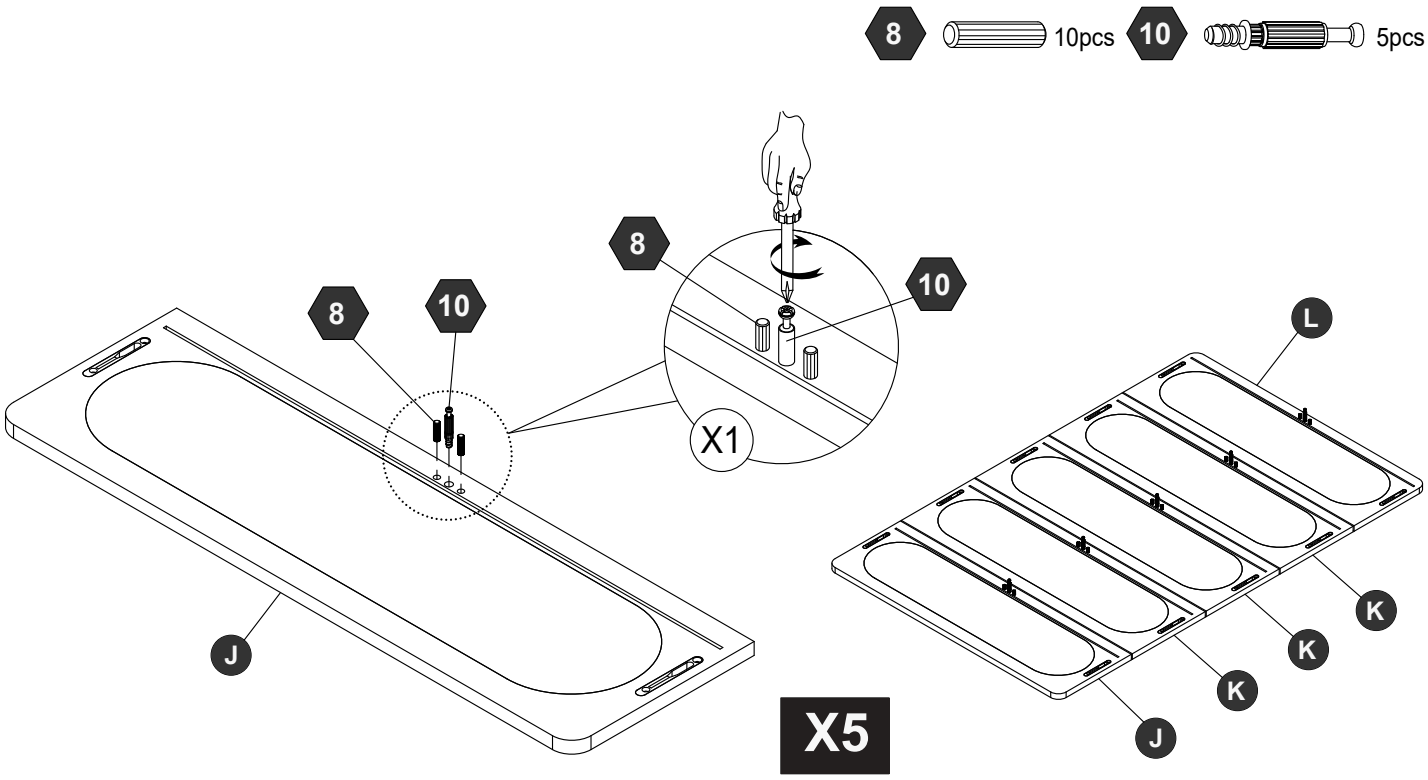

Step 2

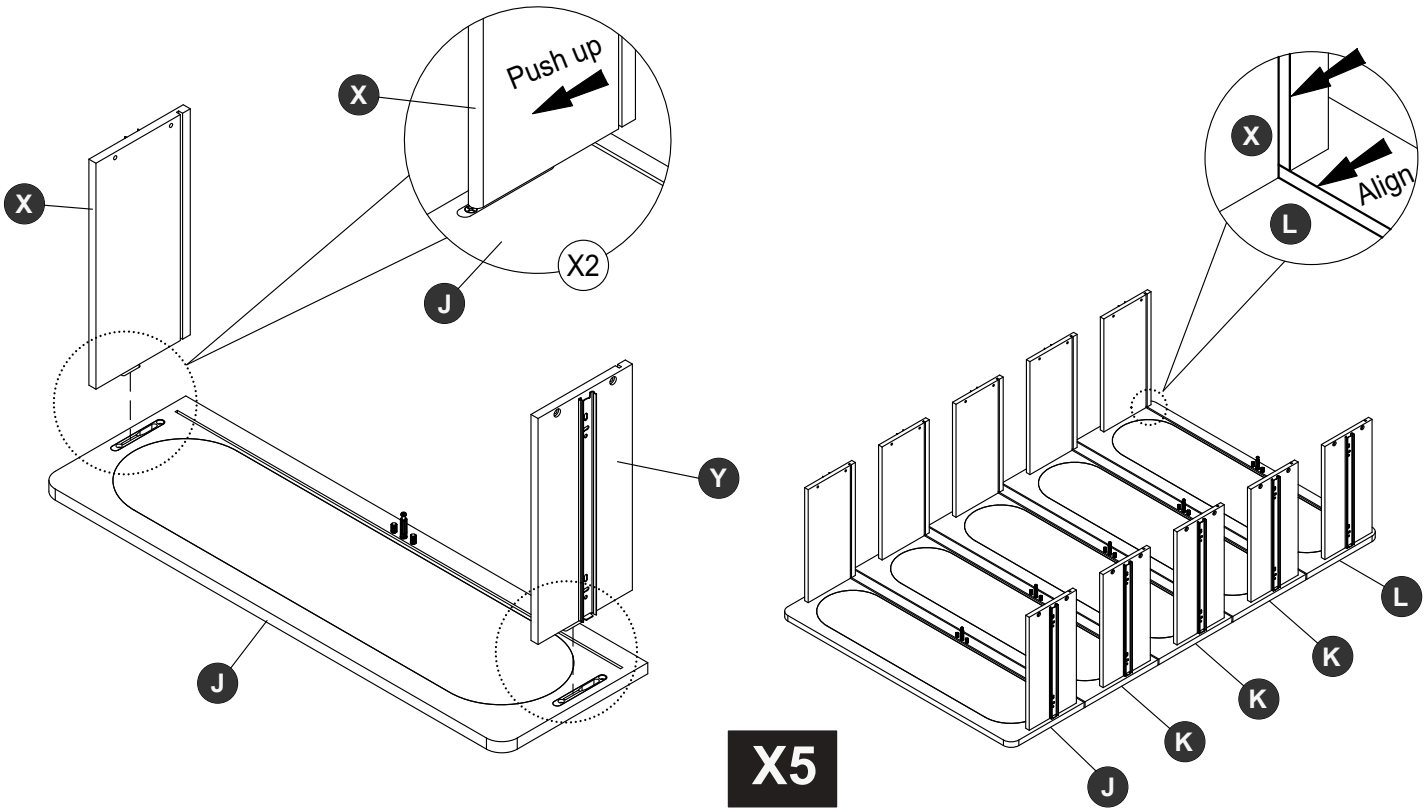

Scan for assembly instructions.

Step 3

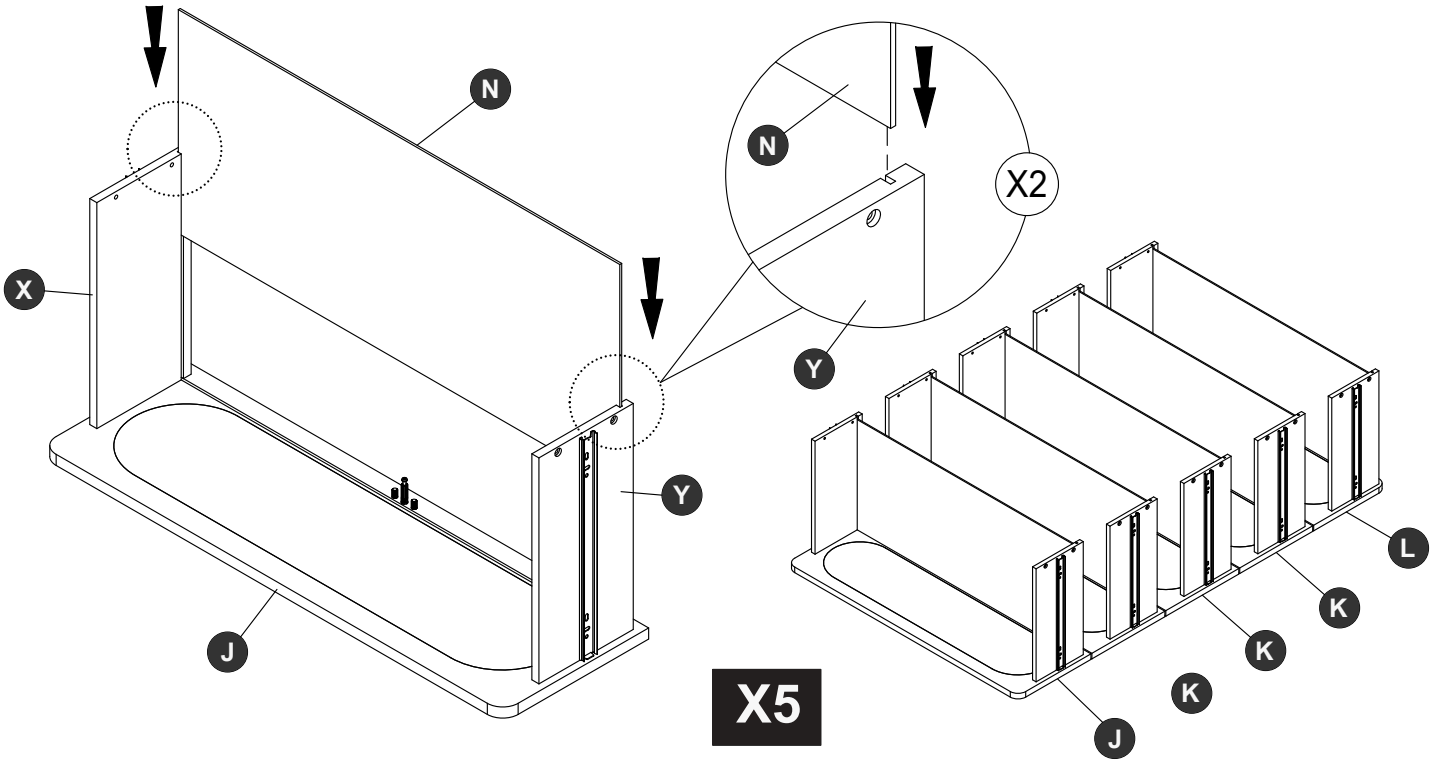

Step 4

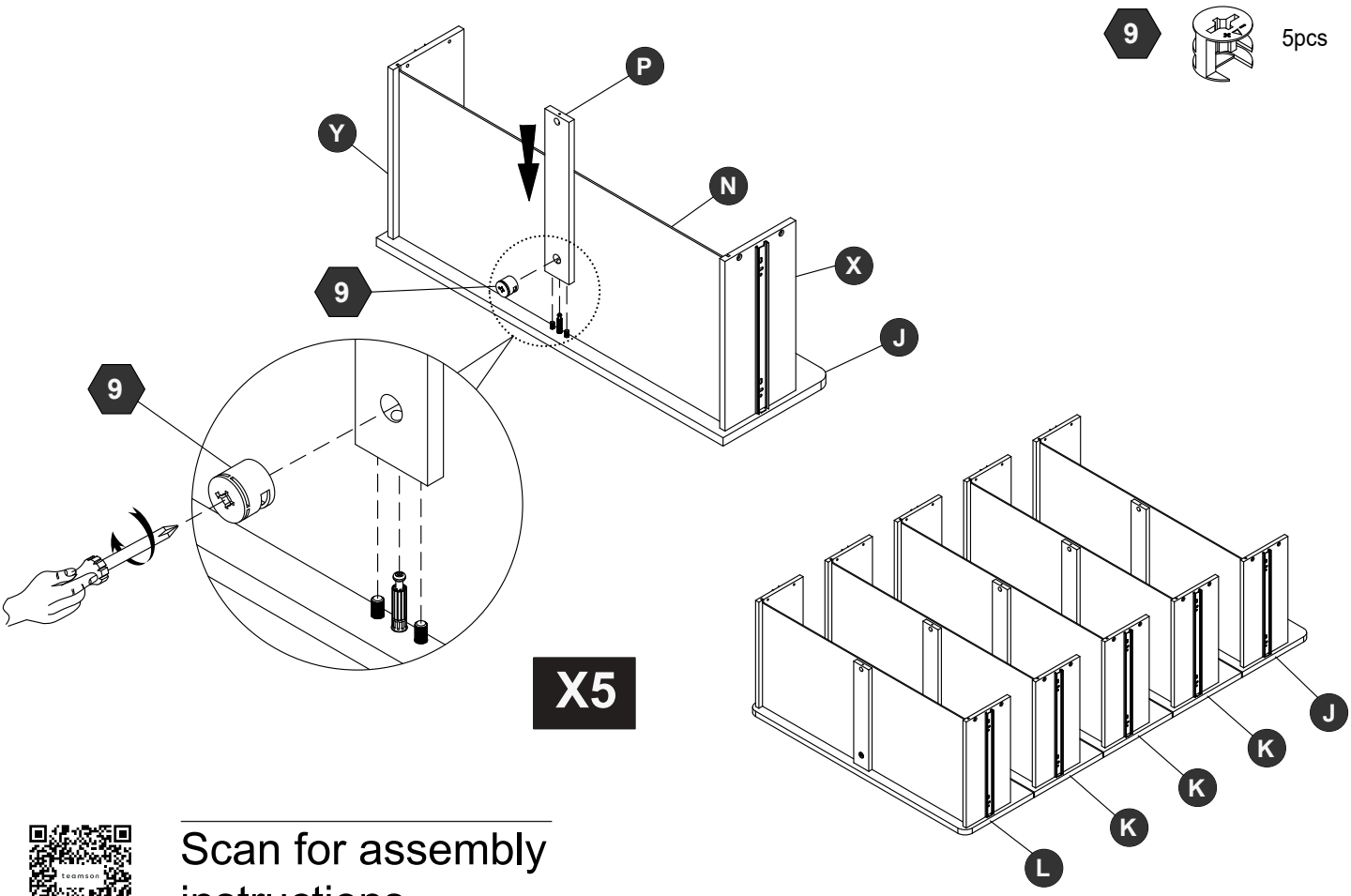

Scan for assembly instructions.

Step 5

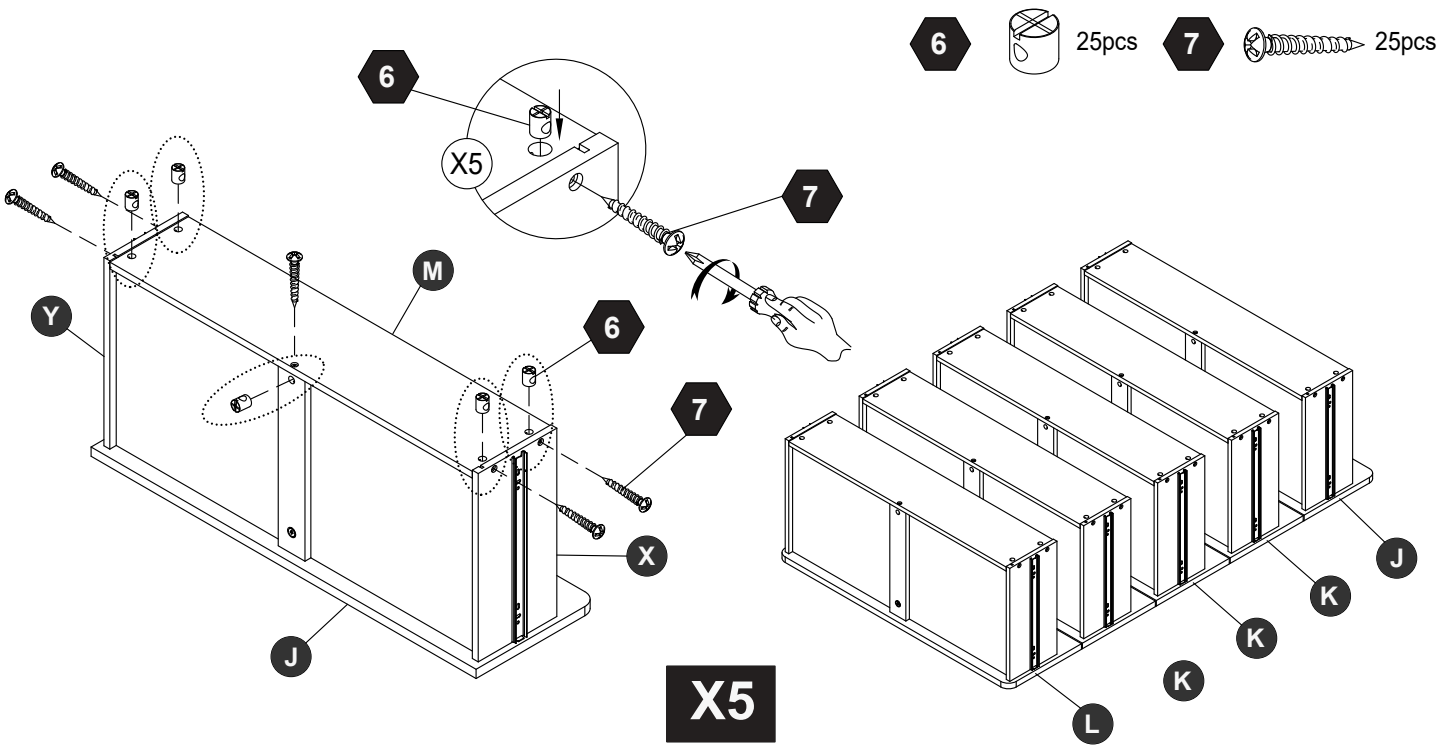

Step 6

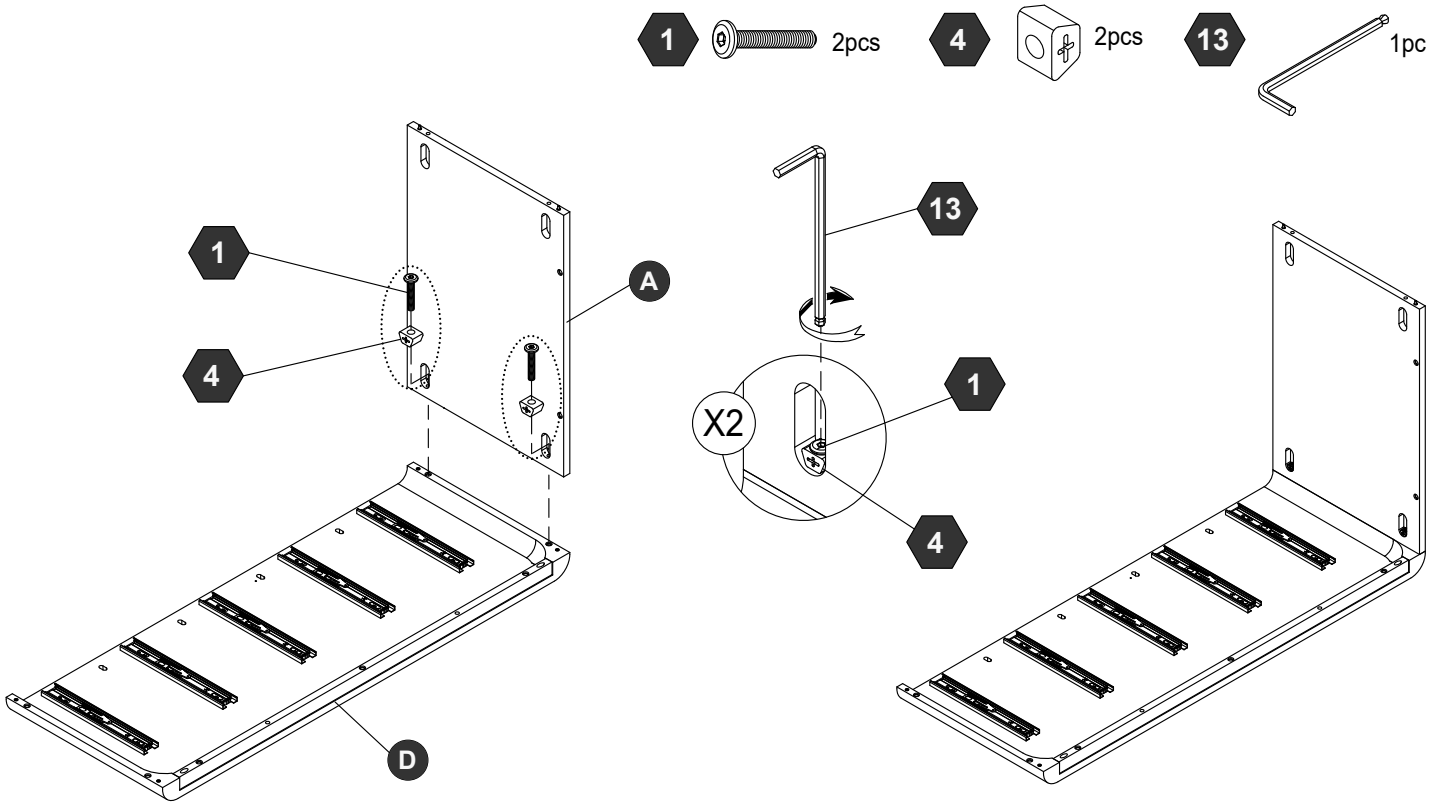

Scan for assembly instructions.

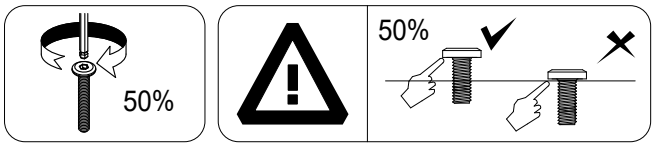

Step 7

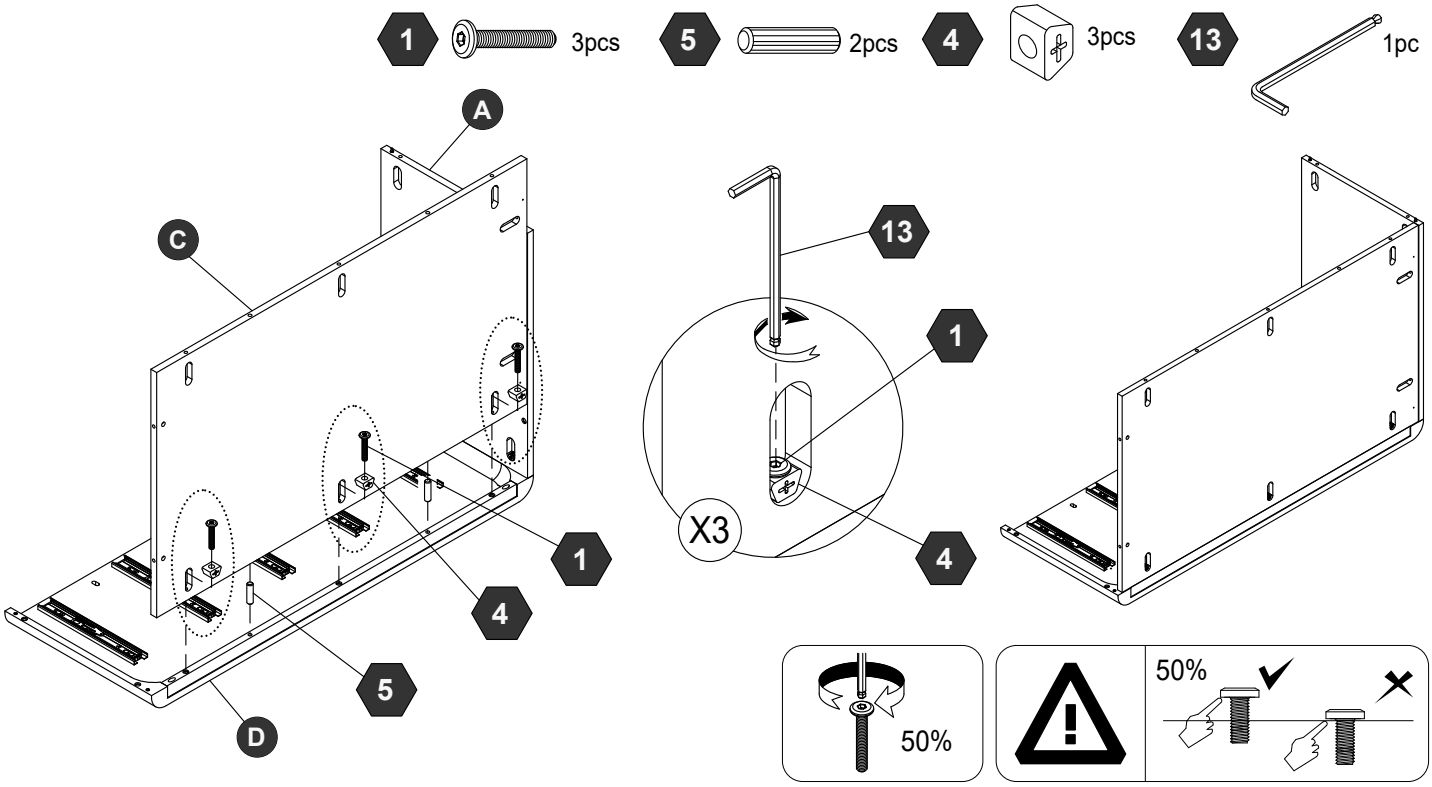

Step 8

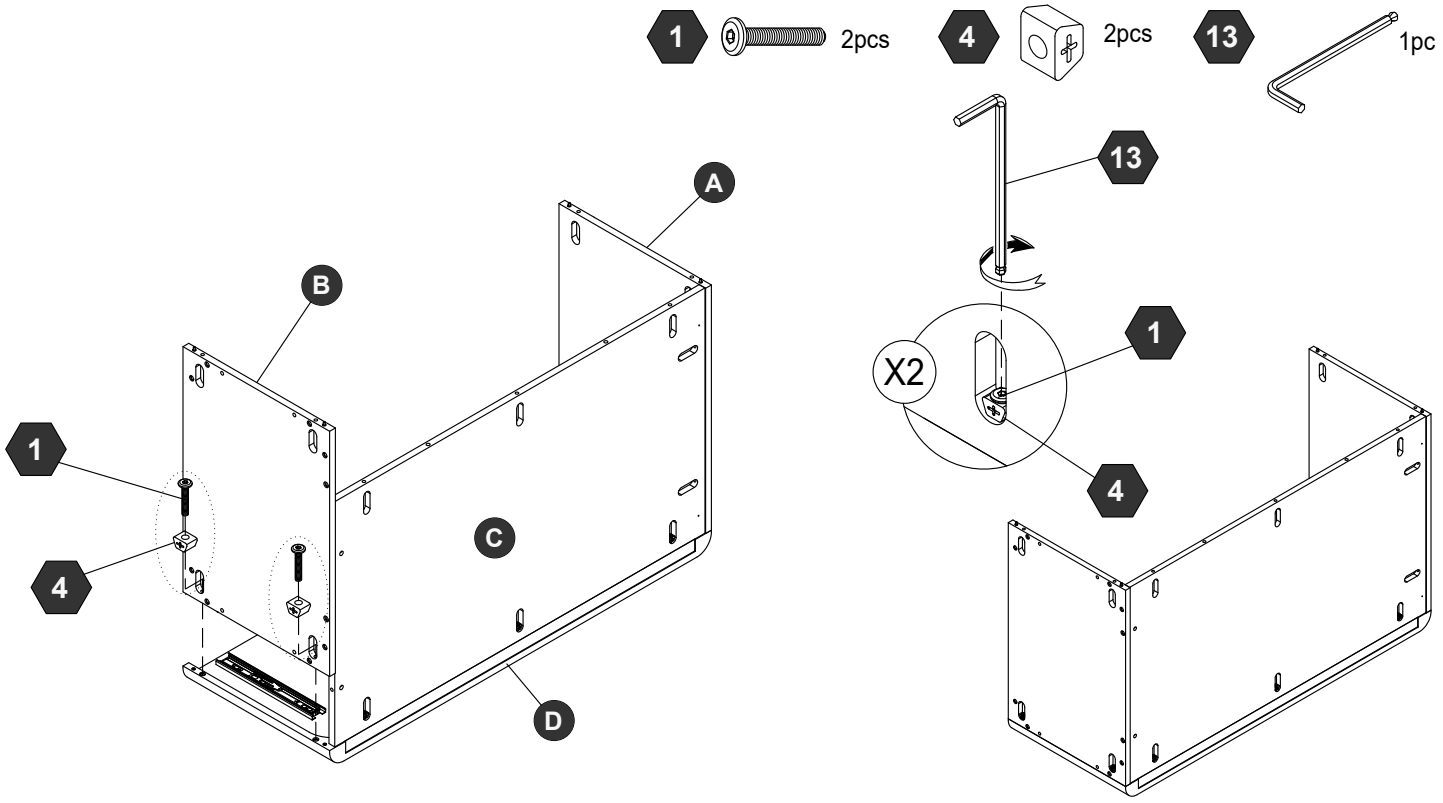

Scan for assembly instructions.

Step 9

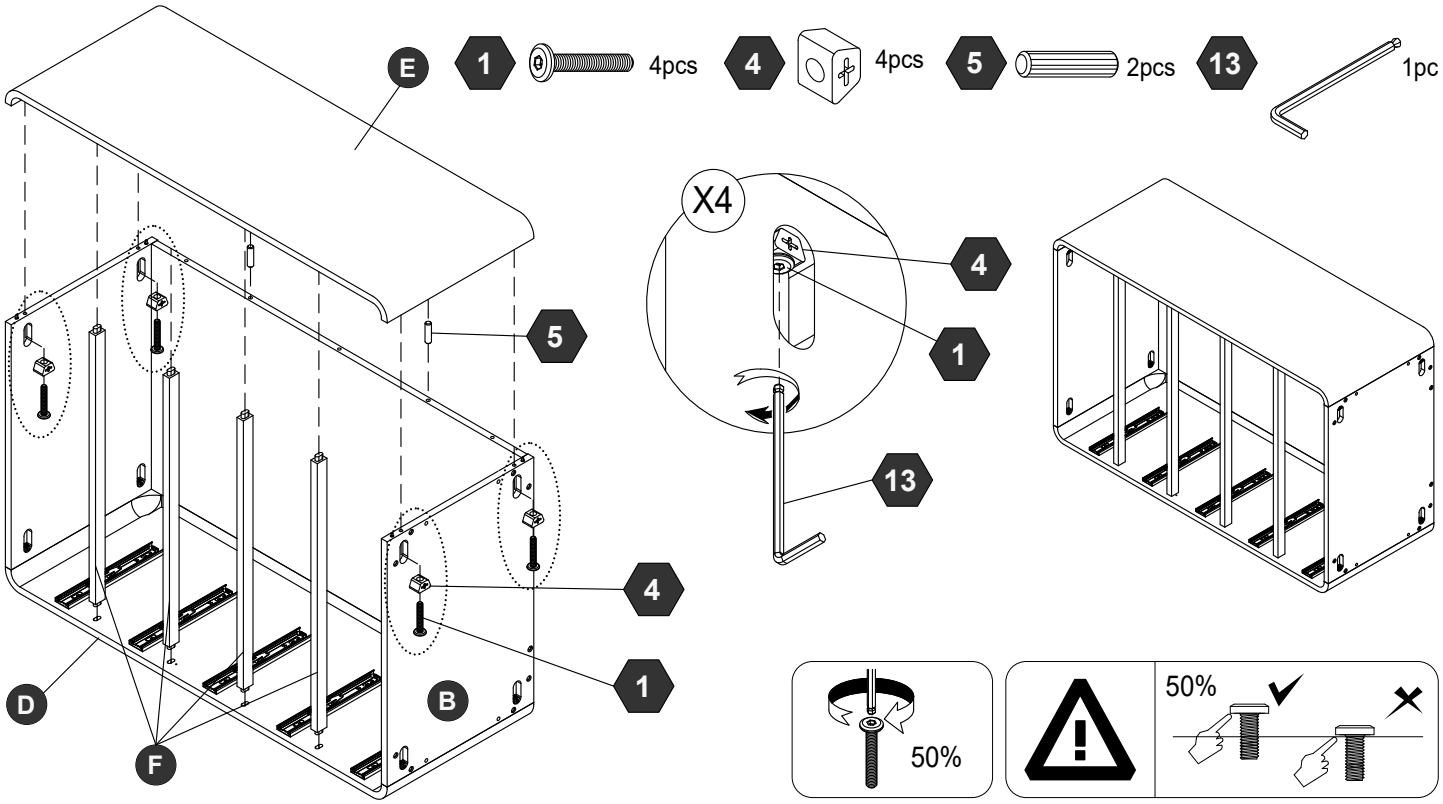

Step 10

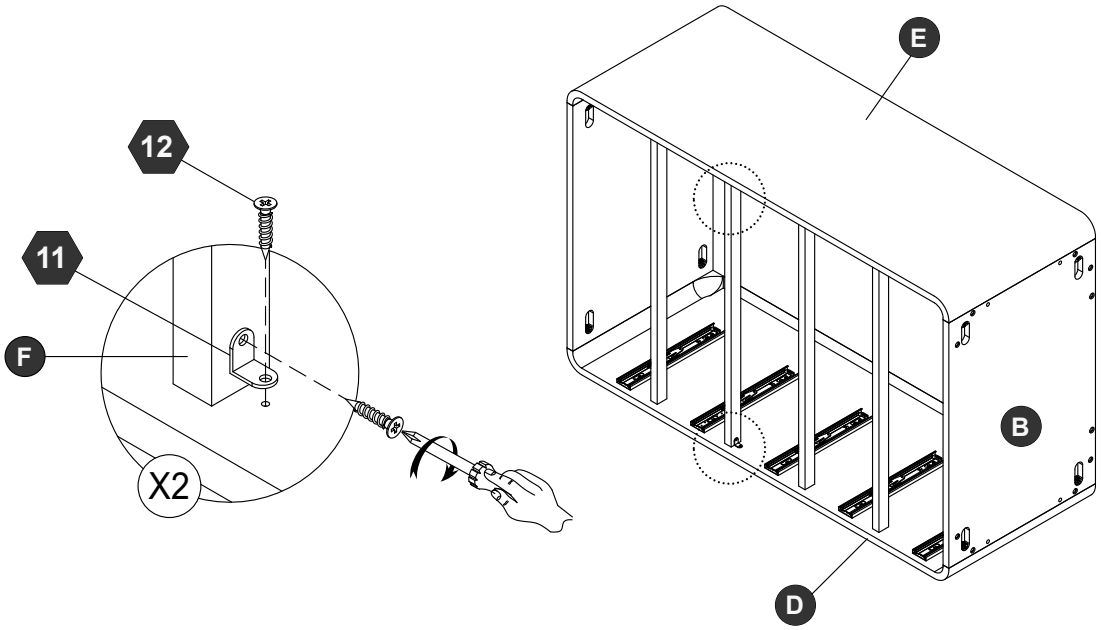

Scan for assembly instructions.

Step 11

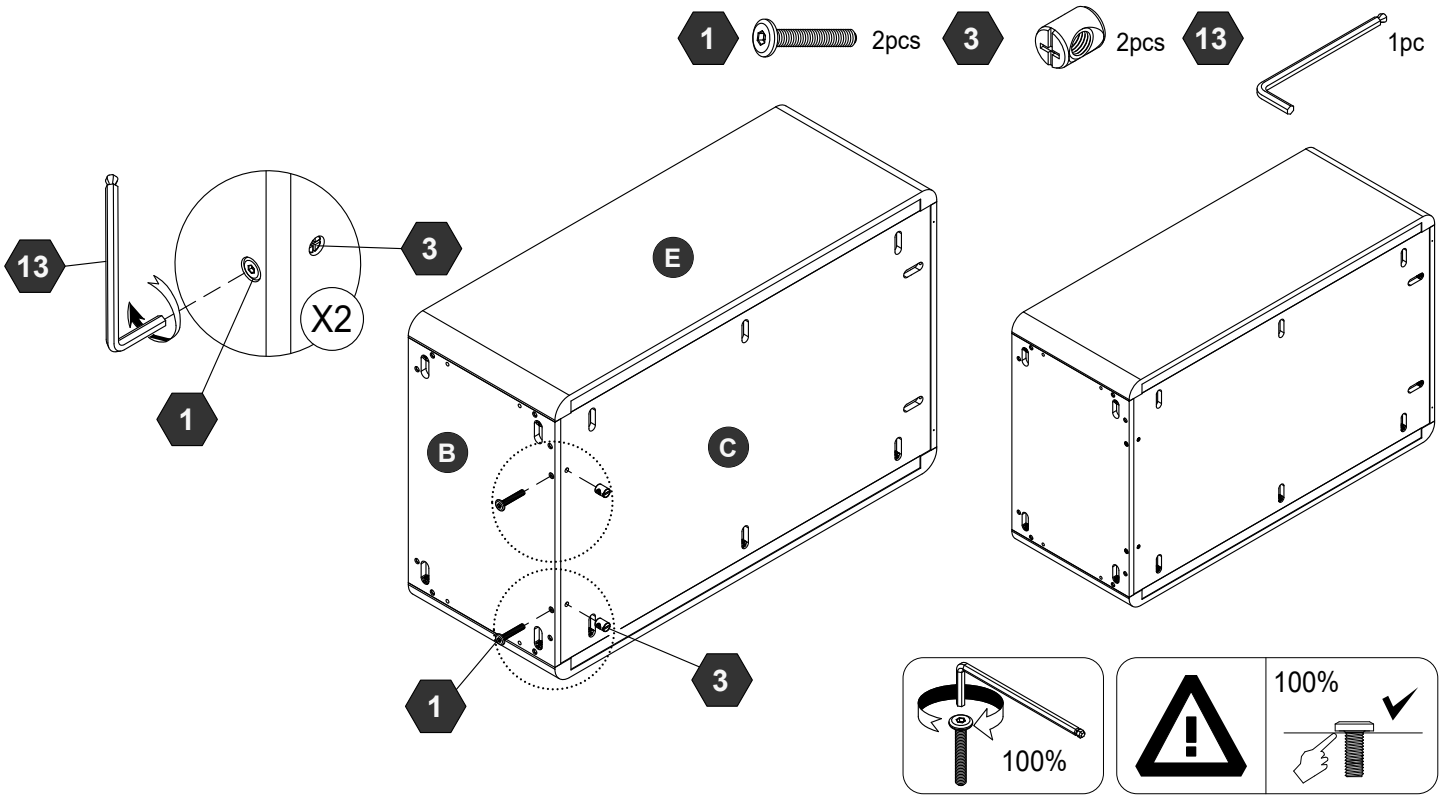

Step 12

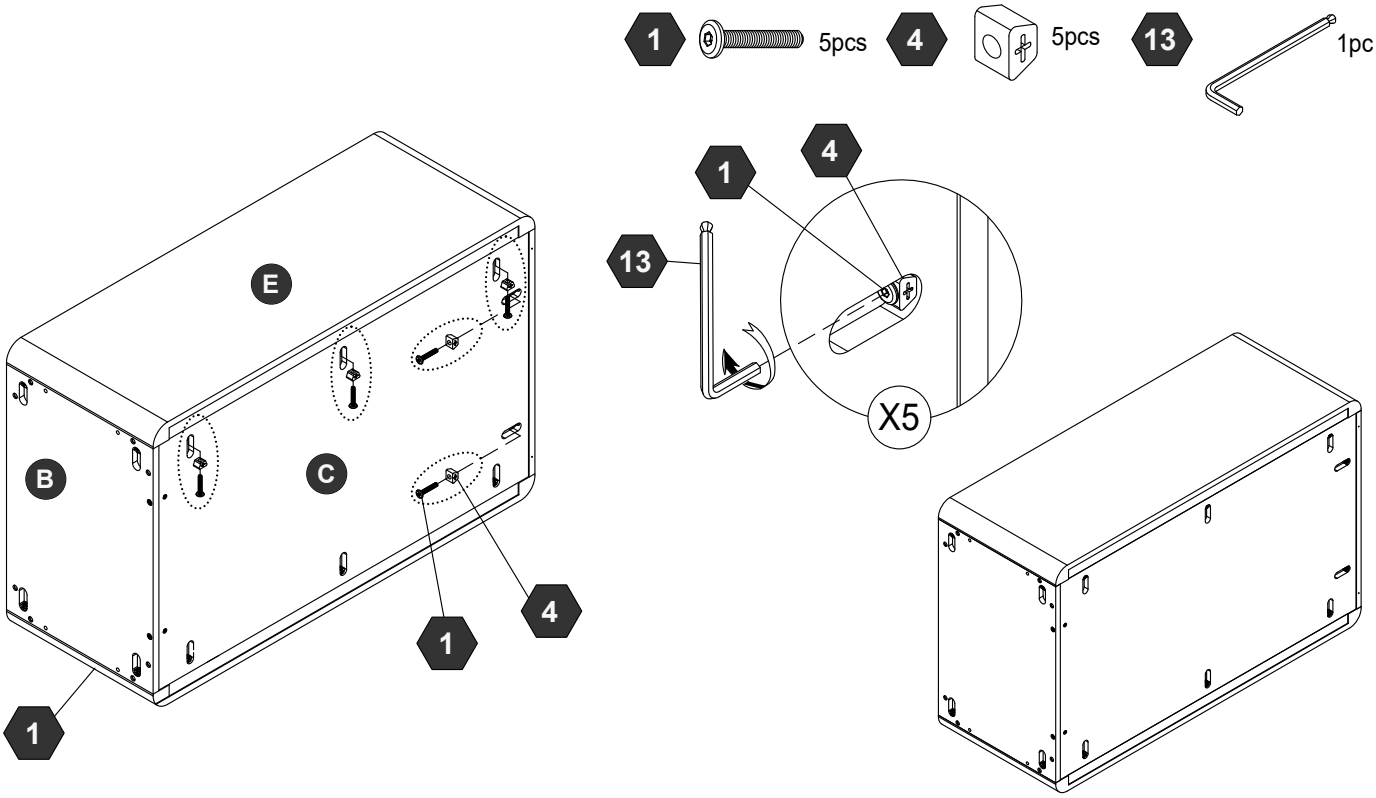

Scan for assembly instructions.

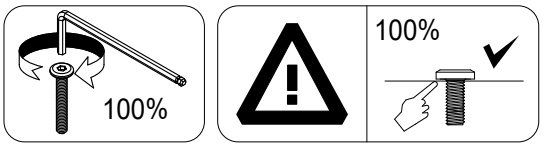

Step 13

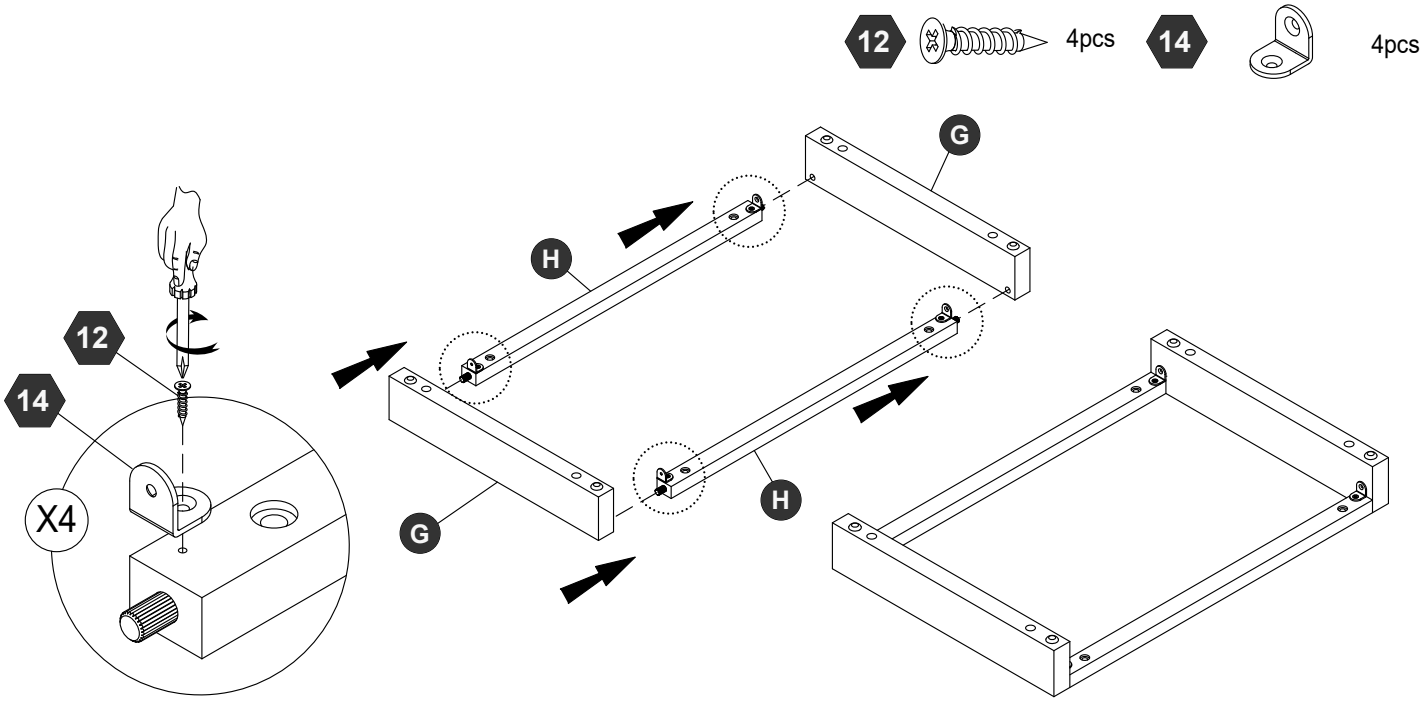

Step 14

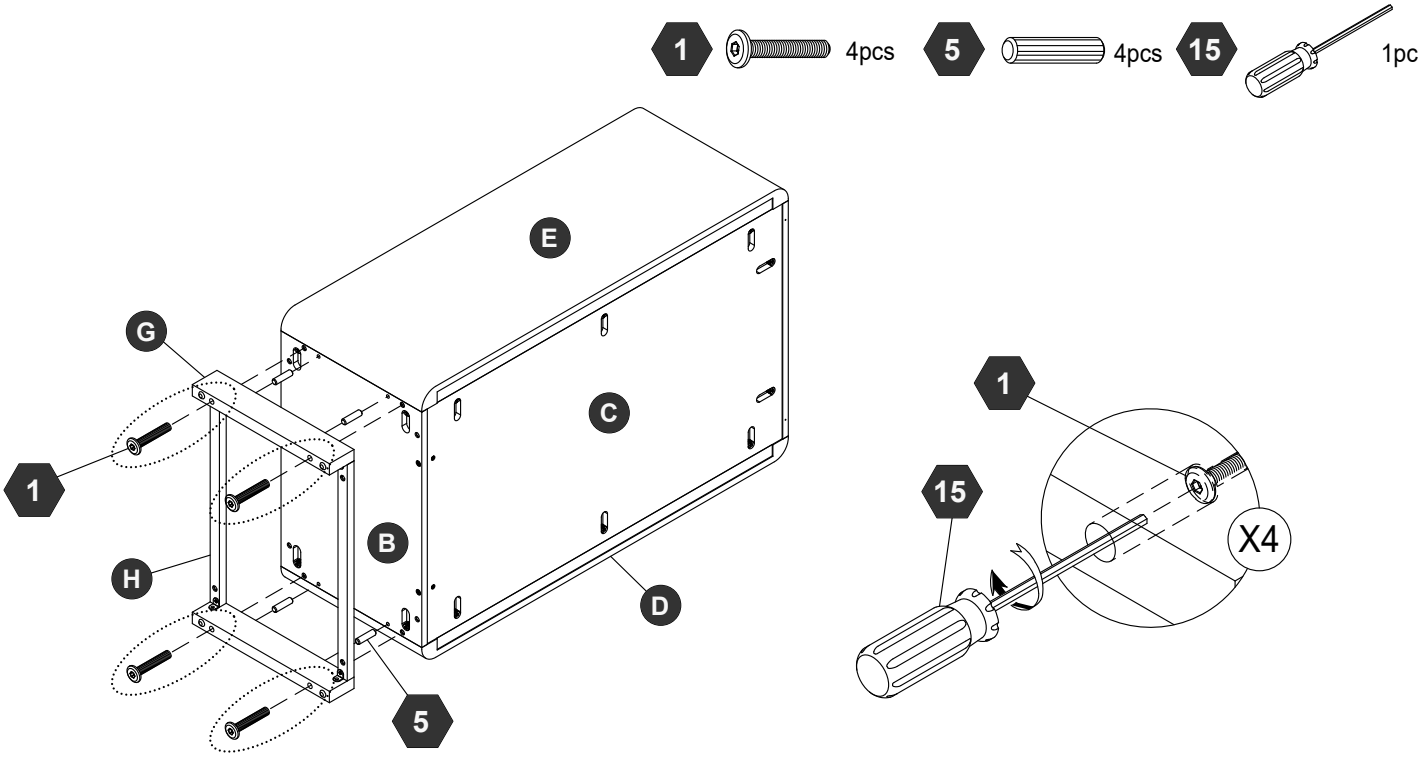

Scan for assembly instructions.

Step 15

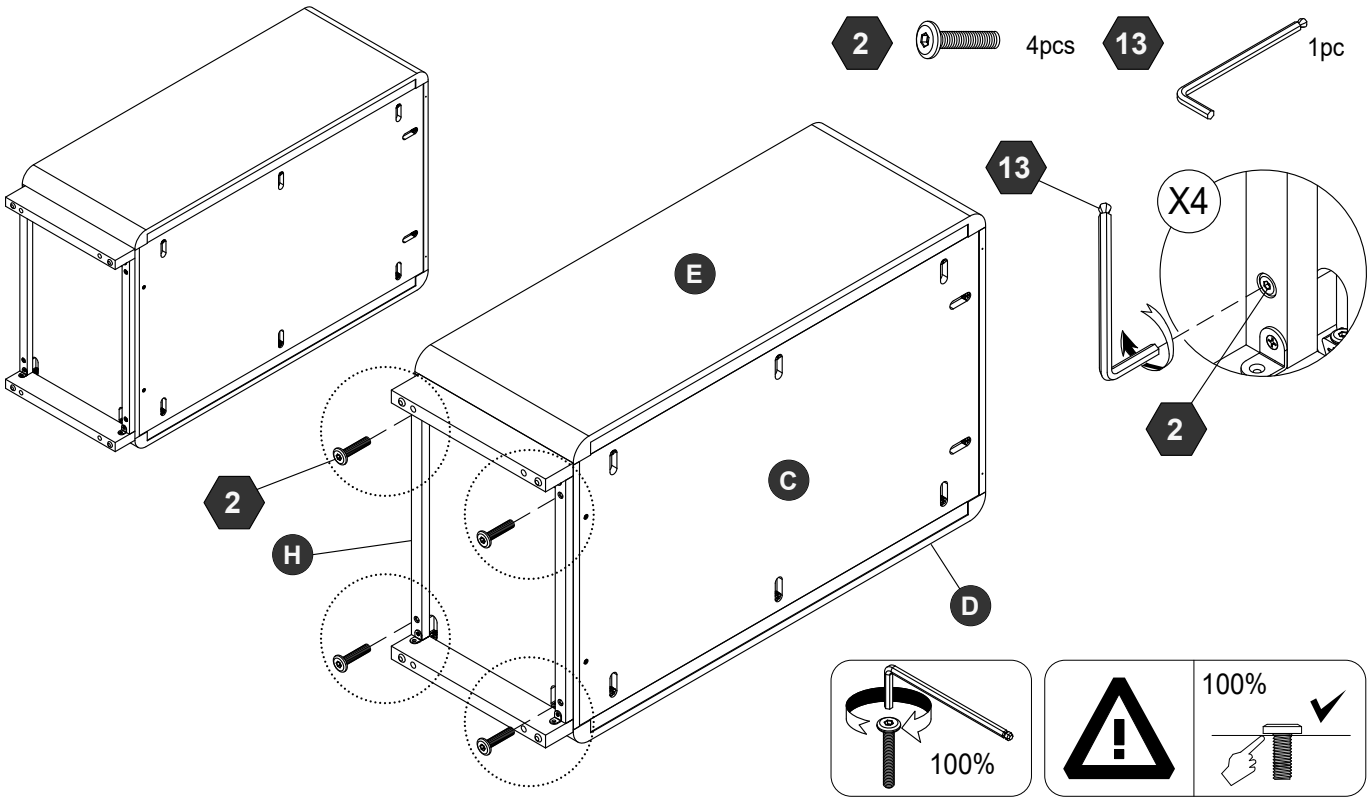

Step 16

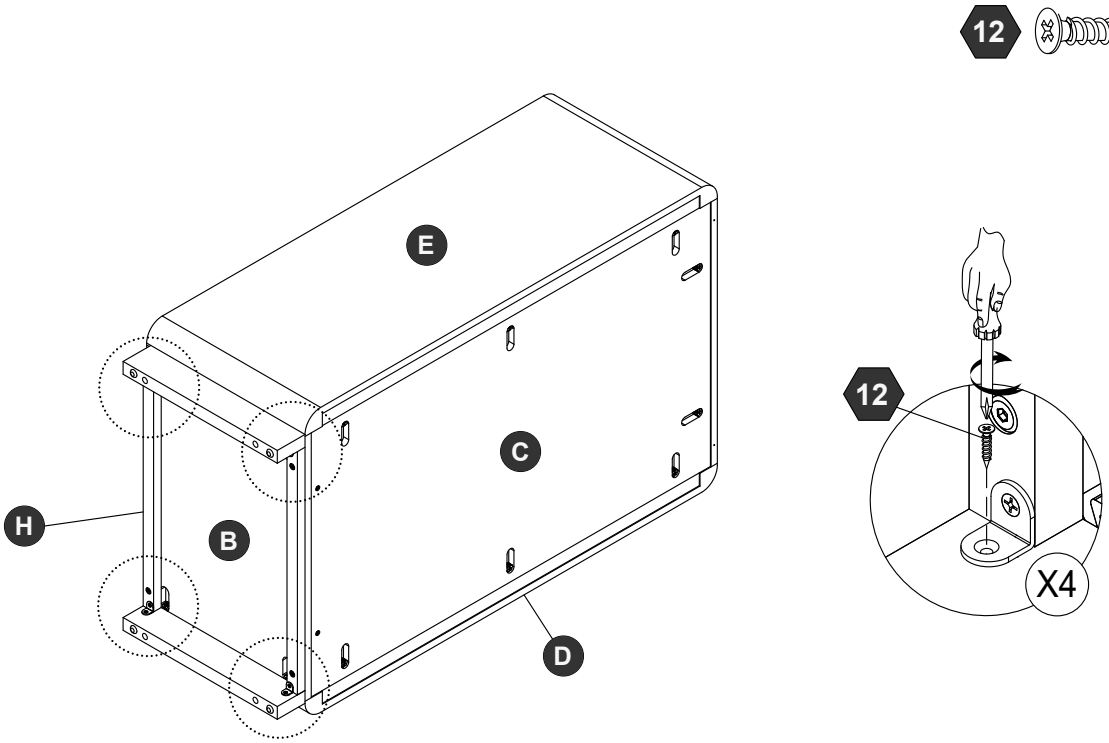

Scan for assembly instructions.

Step 17

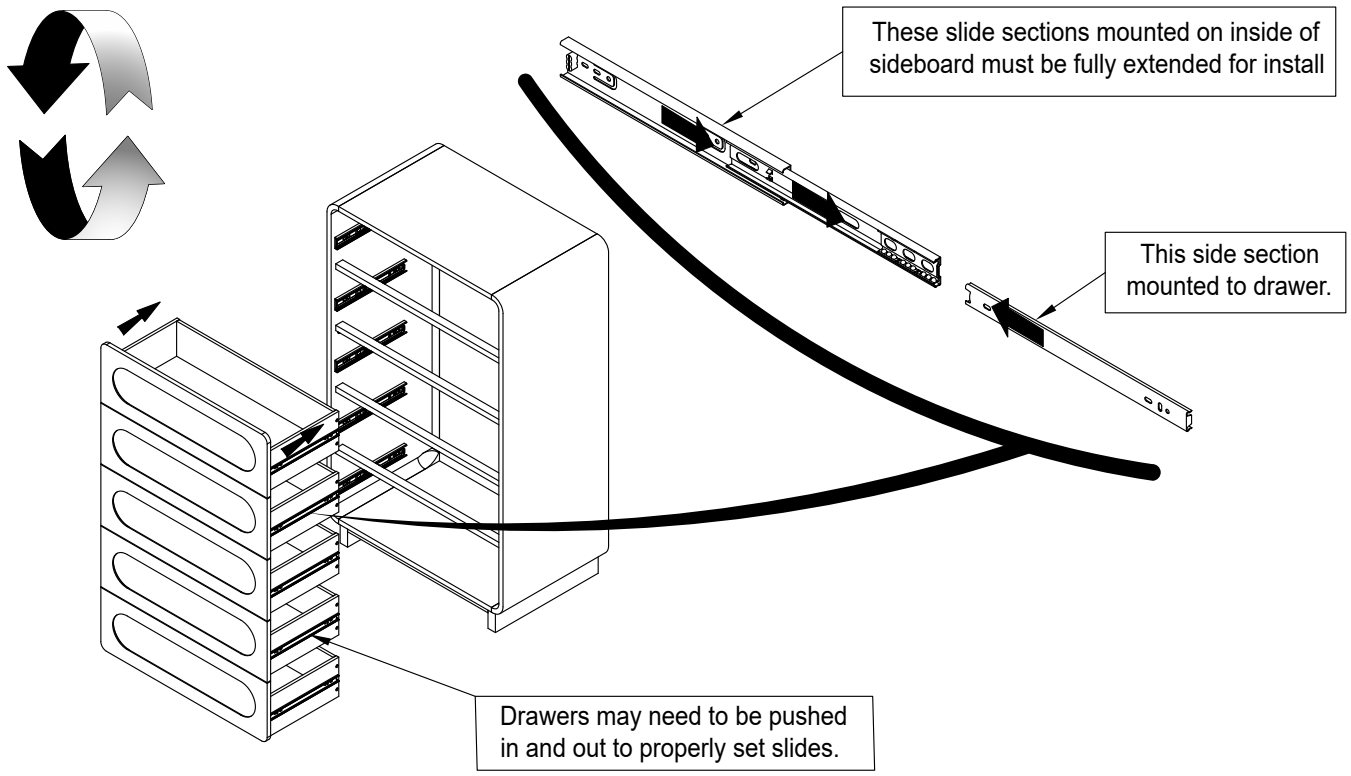

Step 18

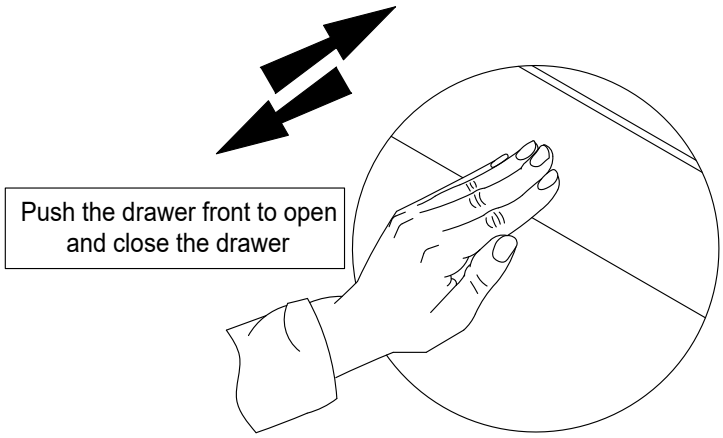

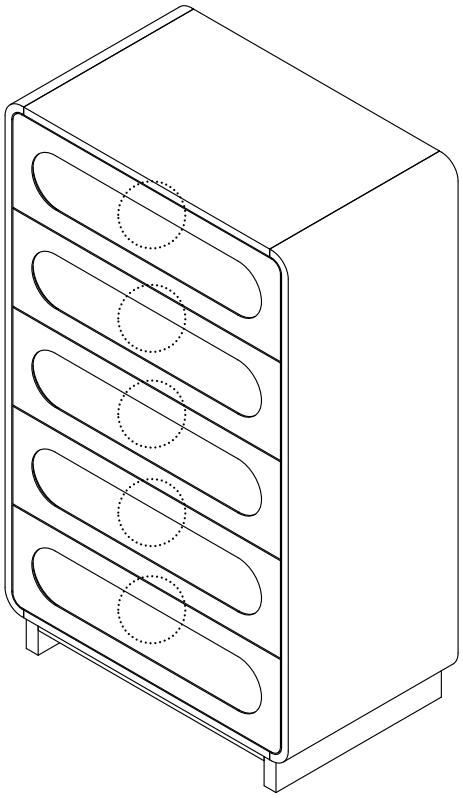

Scan for assembly instructions.

Anti Tip Kit Installation

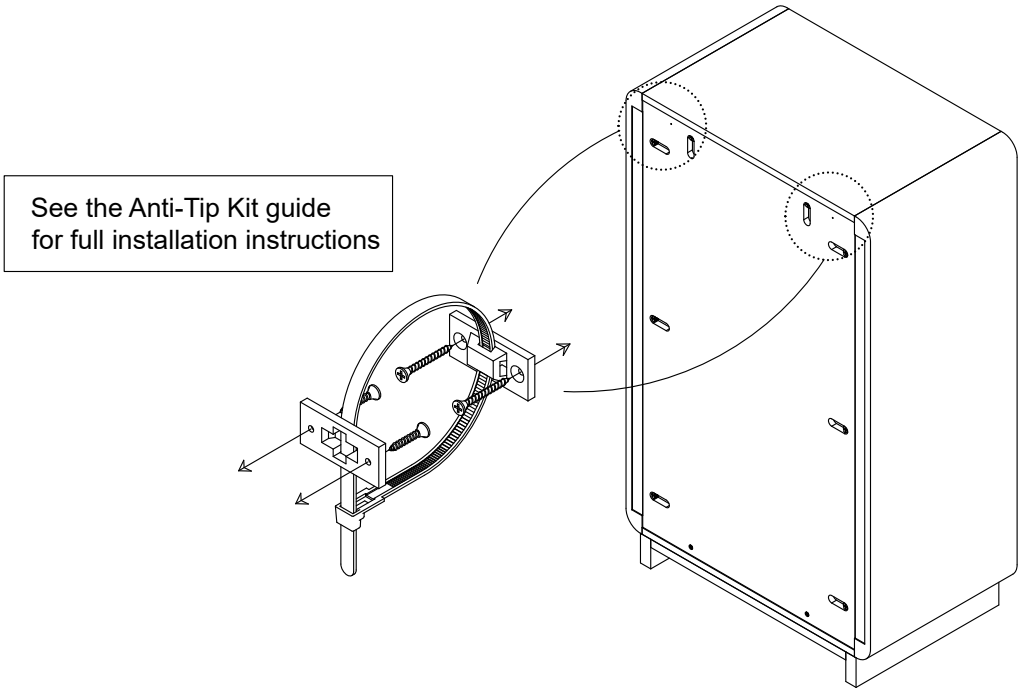

Scan for assembly instructions.