PART NO. B05740

WASHING MACHINE BOX, RIGHT OUTLET, 1/2" MIP/ SWT CONNECTION
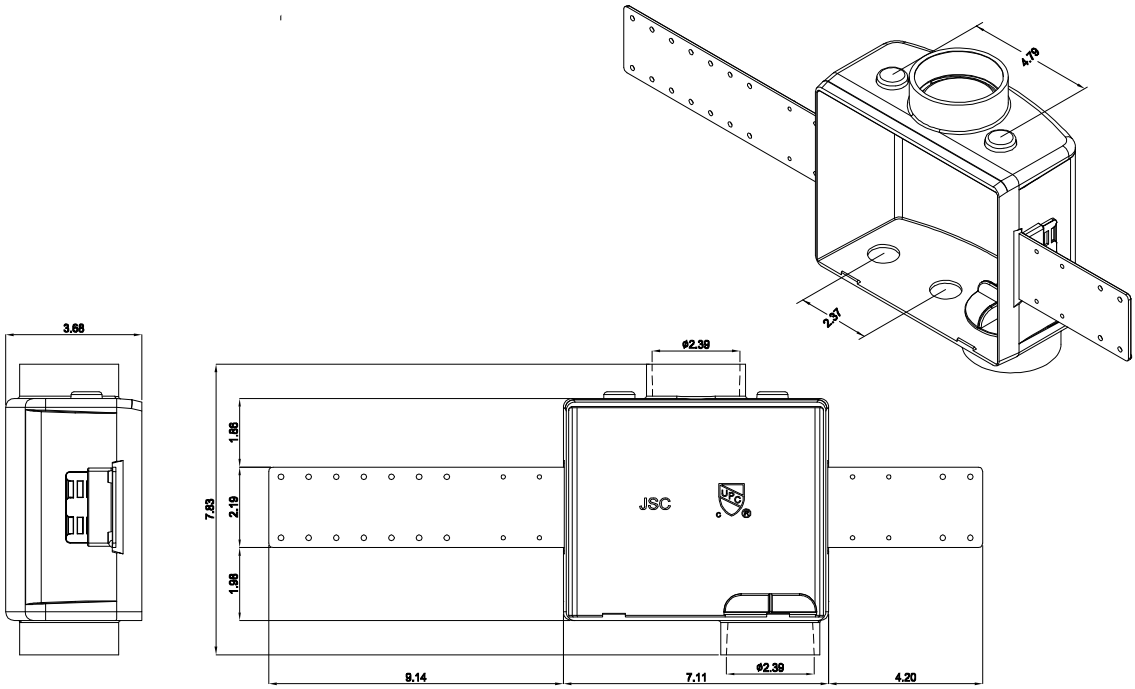
- Compact design
- Quarter-turn valves
- Easy to remove test plug
- Can be converted to a center outlet by rotating box 180°
- Includes mounting brackets and frame
- Meets or exceeds IAPMO PS 54-2015, ASME A112.18.1-2018, and CSA B125.1-18
- cUPC listed