GOJO PRO TDX™ 5000 DISPENSER DIMENSIONS

These dimensions apply to GOJO® PRO TDX 5000 dispenser.

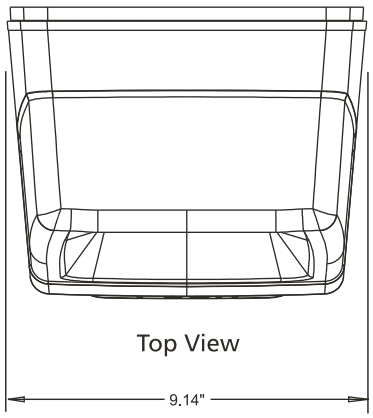

Top View

Use the dimensions provided to ensure adequate wall spacing and clearance for the unit.

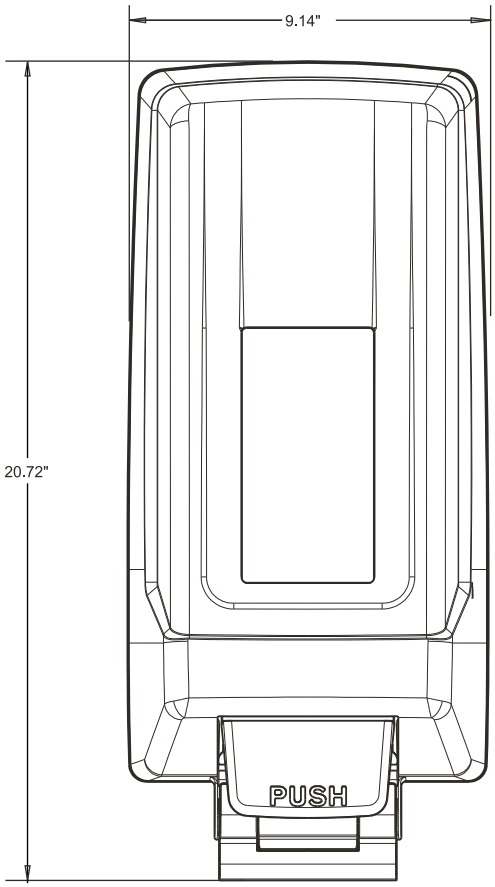

Front View

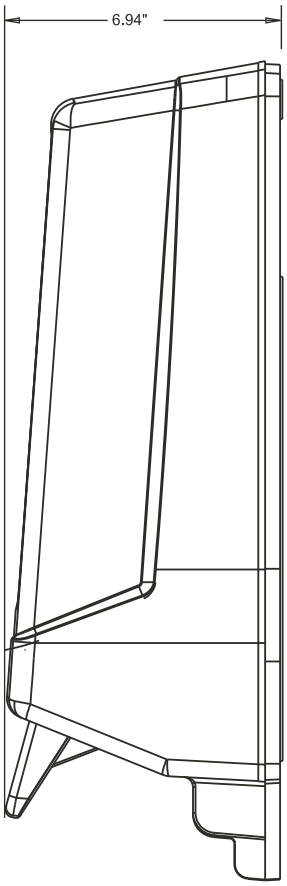

Side View

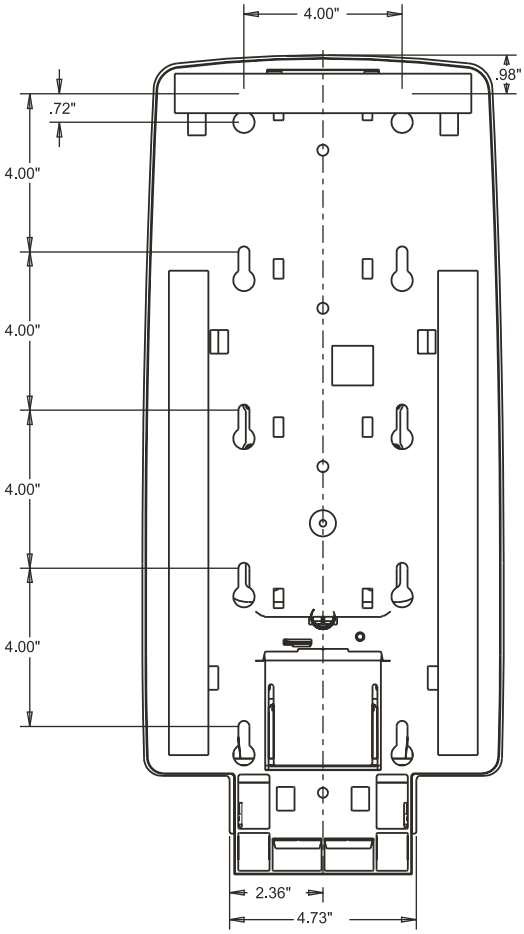

Back View

GOJO Industries, Inc.
One GOJO Plaza, Suite 500
P.O. Box 991 • Akron, OH 44309-0991
Tel: 1-330-255-6000 • Toll-free: 1-800-321-9647
Fax: 1-800-FAX-GOJO

©2014. GOJO Industries, Inc. All rights reserved.