DWG. NO. 251-066-00402P

REV	DESCRIPTION	BY DATE	APPD
A	RELEASE PER NPR 2240A	MJF 2/26/01	

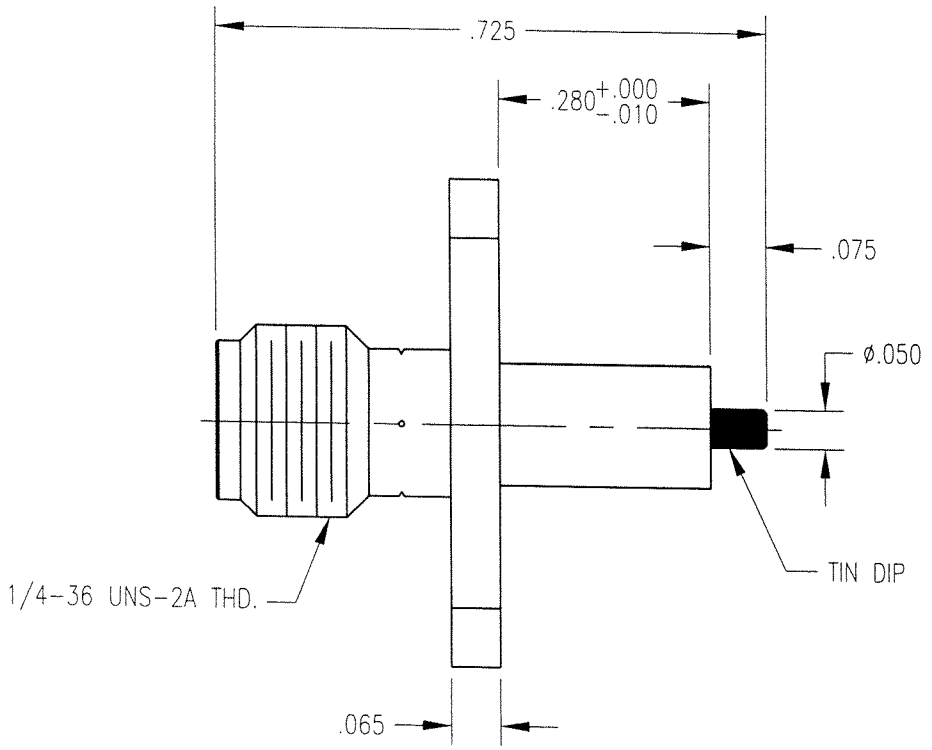

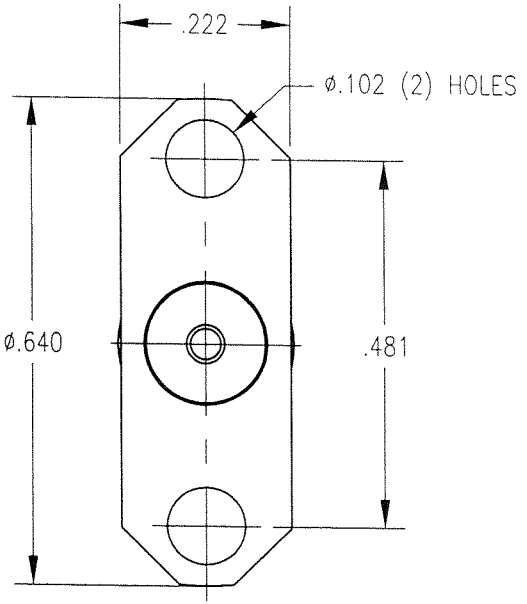

NOTES:

1. MATERIALS:
   - BODY: STAINLESS STEEL PER ASTM A582
   - INSULATOR: TEFLON PER ASTM D1710
   - CONTACT: COPPER ALLOY
2. FINISH:
   - CONTACT: .000030 MIN. GOLD PER MIL-G-45204 OVER .000050 MIN. NICKEL PER QQ-N-290
   - BODY: PASSIVATE PER ASTM A967

PER ASME Y14.5M-1994
UNLESS OTHERWISE SPECIFIED.
DIMENSIONS ARE IN INCHES [MM]
TOLERANCES:
DECIMALS .xx ± .01/0.254
.xxx ± .005/0.127
ANGLES ± 2°
SCALE: 4:1

CUSTOMER DRAWING

DRAWN MJF DATE 2/26/01
CHECKED DATE
APPROVED DATE
APPROVED DATE

Litton
Winchester/Retconn 400 Park Road Watertown, Connecticut 06795

TITLE
SMA FLANGE MOUNT JACK

A	251-066-00402P	SHT. 1 OF 1	REV. A

June 2006 - This drawing became the property of Winchester Electronics Corporation, Wallingford, CT.