AQUATIC
The bath people

OWNER'S MANUAL & INSTALLATION GUIDE

Builders' Choice

INSTALLER: This booklet must be given to the product owner.
Read all instructions before proceeding. All specifications are ± 3/8'' and are subject to change without notice. Dimensions listed in inches.

Model # _____
Purchase Date _____
Serial # _____
Distributor _____

AQUATIC
The bath people

TABLE OF CONTENTS

PRODUCT WARRANTY REGISTRATION INFORMATION 3

INSTRUCTIONS PERTAINING TO A RISK OF FIRE, ELECTRIC SHOCK, OR INJURY TO PERSONS 4 - 5

PRE-INSTALLATION REQUIREMENTS
Inspection Before Installation 6
Pre-Planning Access, Plumbing & Electrical Installation 7
Before You Start 7

INSTALLATION INSTRUCTIONS
Framing Diagrams 8
Deck Cutouts 9
Installation 10
Skirt Installation Procedures 11
Electrical Connections 12-13
Final System Test & Clean-Up 14

OPERATION INSTRUCTIONS
Your Whirlpool Bathtub — What It Is And How It Works. 15
Before Your First Use 15 - 16

FCC CONSUMER INFORMATION 16

TUB CARE
Maintenance 17 - 18
Repair 18

WATER QUALITY
Chemical & Water Quality 19 - 20

TROUBLESHOOTING GUIDE 21

REPLACEMENT PARTS MAPS 22

REPLACEMENT PARTS LIST 23

AQUATIC LIMITED WARRANTY 24

AQUATIC Product Warranty Registration Information

Thank you for choosing an Aquatic bath. You have chosen one of the finest bath products in the industry. Aquatic supports your purchase with strong commitments to quality and customer satisfaction.

IMPORTANT!

To activate Product Warranty please register with Aquatic.
Your product warranty must be registered and confirmed with Aquatic through the Serial Number on your unit. To register, please contact Aquatic.

800.945.2726 • www.aquaticbath.com/register

Please read and follow all of the instructions contained in this Owner's Manual before installing, operating or maintaining your whirlpool. In addition, you should continually refer to these instructions during the life of your tub. Failure to comply with these instructions may invalidate your warranty. If you have questions concerning installation, operation, maintenance or any other aspect of your tub, please contact CUSTOMER SERVICE: 800.945.2726 (The Troubleshooting Guide on page 21 may be helpful in answering some of your questions.)

NOTE: The installation and service of your Tub should be performed ONLY by a licensed electrician and plumber.

IMPORTANT!

This product MUST BE WATER-TESTED and inspected prior to installation or warranty will be voided. [See TO INSPECT on page 6.]
Neither Aquatic nor the distributor will be responsible for removal or reinstallation costs should replacement of the bath be necessary.

PLEASE CHECK ENTIRE UNIT FOR ANY DAMAGE.
If it appears damaged, do not install. Contact your Aquatic Distributor immediately.
Aquatic warranty does not cover damage that occurs in transit.

Model & Serial Number Location

The tub model and serial numbers are located above the pump area on the backside of the bathtub. An access panel should be placed by the installer at this location.

AQUATIC
The bath people

INSTRUCTIONS PERTAINING TO A RISK OF FIRE, ELECTRIC SHOCK, OR INJURY TO PERSONS

WARNING: When using this unit, basic precautions should always be followed. Failure to follow these instructions could result in personal injury, electric shock, or fire.

READ AND FOLLOW ALL INSTRUCTIONS:

- WARNING: Risk of lethal electric shock. To reduce risk of electric shock, connect only to circuits protected by a Ground-Fault Circuit-Interrupter (GFCI) or Residual Current Device (RCD).
- DANGER: To reduce the risk of injury, do not permit children to use this unit unless they are closely supervised at all times.
- Use this unit only for its intended use as described in this manual. Do not use additional attachments and/or equipment not recommended by the manufacturer.
- Never drop or insert any object into any opening.
- Do not operate this unit without the guard over the suction fitting.
- The unit must be connected only to a supply circuit that is protected by a Ground-Fault Circuit-Interrupter (GFCI). Such a GFCI should be provided by the installer and should be tested on a routine basis. To test the GFCI, push the test button. The GFCI should interrupt power. Push the reset button. Power should be restored. If the GFCI fails to operate in this manner, there is a ground current flowing, indicating the possibility of an electric shock. Do not use this unit. Disconnect the unit and have the problem corrected by a qualified service representative before using.
- To reduce the risk of injury, enter and exit the bath slowly.
- This product is intended for indoor use only. Installing this unit outdoors could cause personal injury and will void your warranty.

SAVE THESE INSTRUCTIONS.

Your safety and the safety of others are very important.

We have provided many important safety messages in this manual and on your appliance. Always read and obey all safety messages.

This is the safety alert symbol. This symbol alerts you to potential hazards that can kill or hurt you and others.

All safety messages will follow the safety alert symbol and either the word "DANGER" or "WARNING." These words mean:

DANGER

You can be killed or seriously injured if you don't immediately follow instructions.

WARNING

All safety messages will tell you what the potential hazard is, tell you how to reduce the chance of injury, and tell you what can happen if the instructions are not followed.

WARNING

Electrical Shock Hazard

Plug into a grounded 3-prong outlet.

Do not remove ground prong.

Do not use an adapter.

Do not use an extension cord.

Failure to follow these instructions can result in death, fire, or electrical shock.

CALIFORNIA PROP. 65

WARNING: This product can expose you to chemicals including styrene and styrene compounds, which are known to the State of California to cause cancer and birth defects or other reproductive harm. For more information go to www.p65warnings.ca.gov

INSTRUCTIONS PERTAINING TO A RISK OF FIRE, ELECTRIC SHOCK, OR INJURY TO PERSONS

Before taking your first whirlpool bath, be sure you have performed the "system test." [See **FINAL SYSTEM TEST & CLEAN UP** on page 14.] Be sure that you are familiar with all the controls and switches and that the unit is operating properly. [See **OPERATION INSTRUCTIONS** on page 15-16.]

1. The water in a whirlpool should never exceed 40° C (104° F). Water temperature between 38° C (100° F) and 40° C (104° F) are considered safe for a healthy adult. Bathing time should be limited to approximately 30 minutes, followed by a shower to cool down. Longer exposure may result in hyperthermia. The symptoms of this condition are nausea, dizziness and fainting, which can be fatal. Lower water temperatures are recommended for extended use (exceeding 10 -15 minutes) and for young children.

2. If you will not be operating the whirlpool system during your bath, you may fill the bathtub to any comfortable level. However, if you will operate the system, you must fill the bathtub as described in the section entitled **OPERATION INSTRUCTIONS** on pages 15-16. This will assure proper operation of the system and keep the jets from spraying water outside the bathtub.

3. A few important bathing "DONT'S"-

   DO NOT operate the whirlpool system if:

   - The bathtub isn't filled to required levels above jets.
   - You're pregnant (until you've consulted your doctor).
   - You're taking medications or drugs that may make you drowsy.
   - You're drinking any form of alcohol.
   - You've just had a meal. Wait for 30 minutes after eating.
   - There is a child in the bathtub who may be left unattended at any time. Never allow small children to remain unattended in any bathtub.
   - There are any small objects in the bathtub. The jet action can move small objects at high speeds, causing pain and possible injury.
   - The safety suction cover is not in place. The suction cover is the large fitting with a pattern of holes on its face, mounted on the bathtub's side wall. See Figure 1.
   - You're smoking. The heat of burning tobacco can damage the bathtub surface. Keep tobacco products and ashtrays away from the bathtub.
   - You have problems with your immunity system (until you have consulted your doctor).
   - Never operate electrical appliances (television, hair dryer, radio, telephone, etc.) inside or within five feet (5') of the bath.
   - You are using additional attachments and/or equipment not recommended by the manufacturer.
   - You have a medical history of heart disease, low or high blood pressure, circulatory system problems, or diabetes, consult with a physician before using a whirlpool.
   - You are under the influence of drugs, anticoagulants, stimulants, antihistamines, vasoconstrictors, vasodilators, hypnotics, narcotics, or tranquilizers.

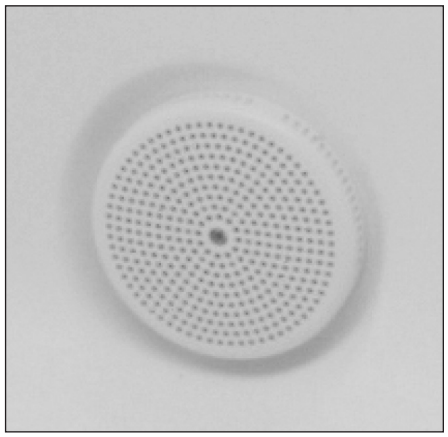

Figure 1

PRE-INSTALLATION REQUIREMENTS

READ ALL INSTRUCTIONS CAREFULLY BEFORE INSTALLATION

TOOLS REQUIRED FOR INSTALLATION: (NOT INCLUDED)

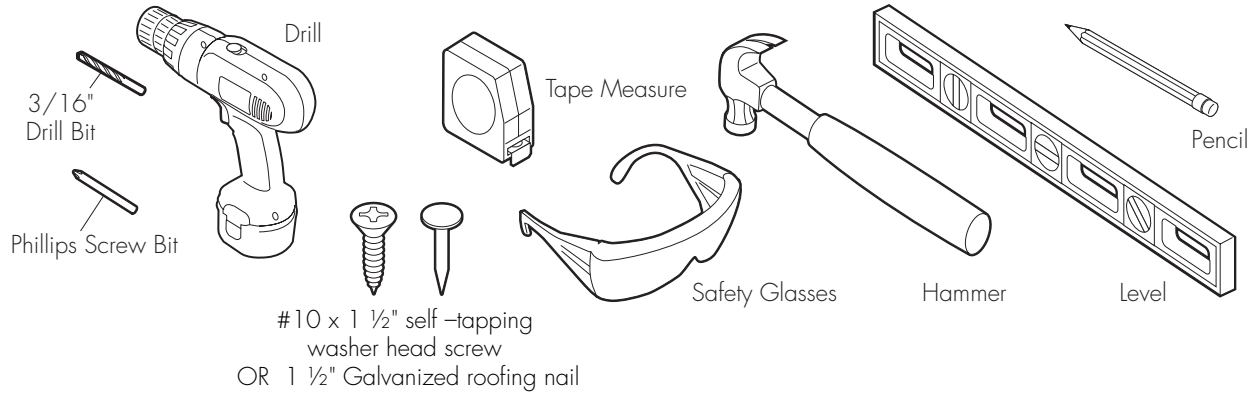

INSPECTION BEFORE INSTALLATION

1. Inspect the Aquatic jetted bath to ensure it is the correct model number, size, color, and has all features, options and accessories originally ordered.
2. If damage or shortage has occurred, notify your distributor, freight carrier, or Aquatic Customer Service Center at (800) 945-2726.

NOTICE: Under no circumstances should a damaged or defective bath be installed without prior factory approval. Neither Aquatic nor the distributor will be responsible for removal or reinstallation costs should replacement of the bath be necessary.

3. Whirlpool is factory-assembled, complete with motor, pump, controls and plumbing. DO NOT lift or support unit using plumbing lines or any part of circulation system. DO NOT relocate or otherwise modify any part of the factory-installed circulation system, as this may affect the performance or safe operation of the whirlpool and will VOID ALL WARRANTIES.
4. For an Aquatic jetted tub supplied with a motor that has an integral pneumatic on/off switch - Make certain the air tube that is connected to the motor is also connected to the on/off button nipple under the deck in order for the system to function.
5. Inspect whirlpool unit and circulation system carefully before installing. WATER TEST the unit before installation. If any damages or defects are observed, DO NOT INSTALL. Repack unit and notify distributor immediately.

WATER TEST: PLACE THE TUB IN AN AREA WHERE IT MAY BE DRAINED AFTER TESTING.

1. Fill the tub with water to the overflow and allow to stand for a few minutes.
2. Run whirlpool for 10 minutes.
3. Inspect the tub completely. Any defect must be reported to Aquatic prior to installation in order to have it covered by warranty.
4. Check to ensure that your installation will conform to all applicable codes and secure necessary permits. All electrical and plumbing connections should be made by qualified electricians and plumbers.
5. This unit has been factory-tested prior to shipment for leakage and proper operation of the system. However, in transit and handling, the unions at both ends of the pump may become loose. Make sure they are hand-tight.

Aquatic will not be liable for any defects or damages, including incidental or consequential damages that could have been discovered or prevented by following these procedures for storage, handling and inspection.

PRE-PLANNING ACCESS, PLUMBING & ELECTRICAL INSTALLATION

1. Building materials and wiring should be routed away from the pump body or other heat-producing components.

2. Ensure that the floor is leveled and can support a load of 50 lbs. per square foot. (If floor is not leveled, shims may be needed to level the bath.)

3. Plan installation to permit access for servicing. **A MINIMUM ACCESS PANEL OF 16" X 16"** must be provided to access the pump or other equipment should service be needed at a later date.

4. Rough-in should be kept to a minimum until the unit is on the job site. Measurements may vary plus zero and minus ⅜" (+0, -⅜") from original specifications.

5. Sufficient clearance must be provided for access to service connections (motor, pump, and heater.)
   A) Alcove Installation (with optional skirt): Access is provided by removing the skirt. To permit removal of skirt, allow at least 6" clearance at both ends of tub: vanity, toilet, etc, must not obstruct skirt removal.
   B) Island or Pier Installations: Provide access panel at motor end. [See Diagrams on page 8.]
   C) Sunken Installations: Provide access panel in floor or in ceiling below.

6. Drain/waste pipe stub must be located in wall or floor to match location of drain, waste and overflow kit tee fitting. Provide a 6" x 12" box-out in sub-floor or slab.

7. When fittings (spout, handles, valves, etc.) are to be mounted on the unit, be certain that the hot and cold water copper supply lines are located where there is ample room for mounting before setting the unit in place.

8. Bathtub must be installed indoors only. Do not install outdoors or warranty will be voided.

WARNING – When using electrical products, basic precautions should always be followed, including the following:

A) **DANGER -** Risk of Electrical Shock. Connect only a separate circuit protected by a Ground-Fault Circuit-Interrupter (GFCI).
B) **Connection -** Electrical hook-up must be performed by a licensed electrician in accordance with local, state and national electrical codes.
C) **Access Panel Required -** For build-in custom units, provide an access panel for servicing electrical components. [See FRAMING & INSTALLATION PROCEDURES on page 11.]

BEFORE YOU START

IMPORTANT: Observe all governing codes and ordinances.

1. Proper installation is your responsibility. Have a qualified technician install this bath.

2. Installation using a Ground-Fault Circuit-Interrupter (GFCI) is required. [See **ELECTRICAL CONNECTIONS** on page 12-13.]

3. It is your responsibility:
   - To contact a qualified electrical installer.
   - To assure that electrical installation is adequate and in conformance with National Electrical Code, ANSI/NFPA 70 - latest edition.

   Copies of this standard may be obtained from:
   National Fire Protection Association
   1 Batterymarch Park
   Quincy, Massachusetts 02169
   (617) 770-3000

INSTALLATION INSTRUCTIONS

FRAMING DIAGRAMS

1. Protect interior of tub throughout installation process.
2. Framing and supports will vary according to the model and type of installation selected.
3. Please refer back to the unit's Technical Data sheet for specific dimensions located at www.aquaticbath.com.

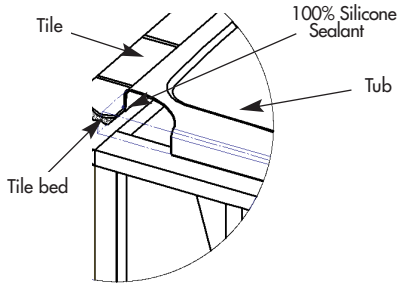

Island Drop-In

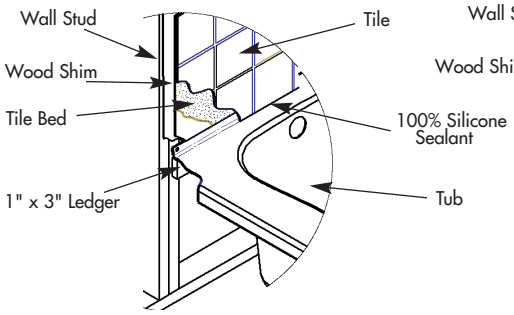

Alcove-Integral Tiling Flange

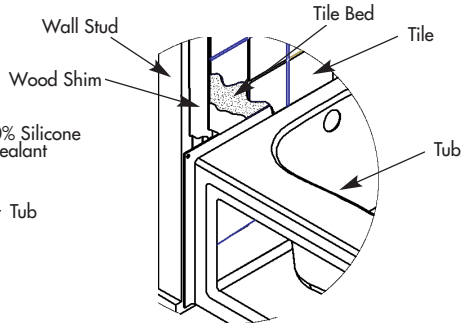

Alcove-Integral Skirted Models

	RECTANGULAR MODELS	CORNER MODELS	OVAL MODELS
ALCOVES	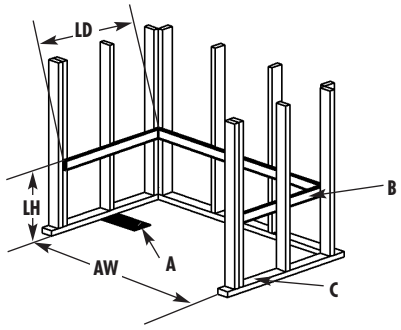	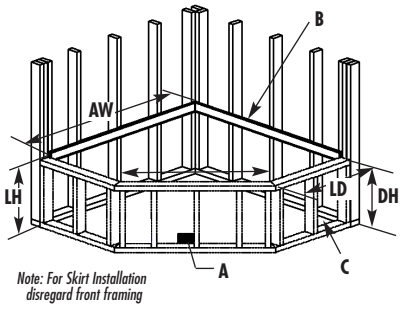	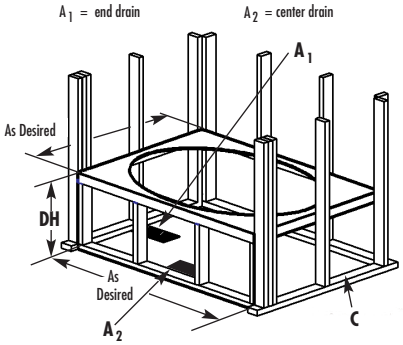
ISLANDS	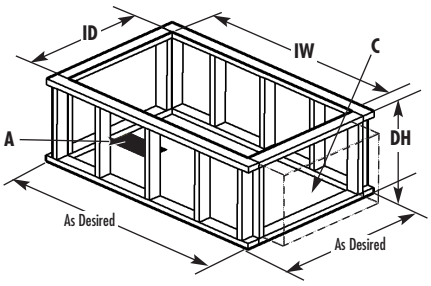	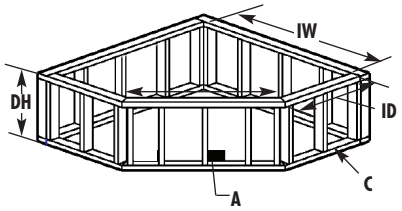	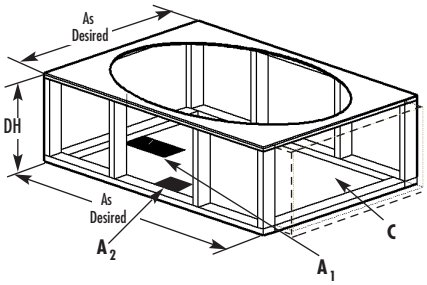
INTEGRALLY SKIRTED MODELS	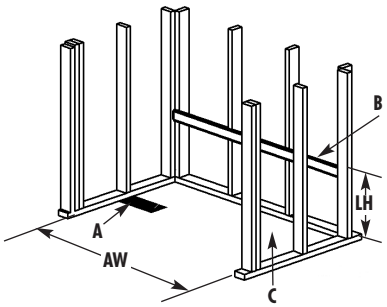		

LEGEND	
AW	Overall Width
DH	Deck Height
ID	Inner Depth
IW	Inner Width
LH	Ledger Height
LD	Ledger Depth

A - 6" x 12" Box-outs
B - Leveled Supports 1" x 3" Ledgers
C - 16" x 16" minimum access on pump end

INSTALLATION INSTRUCTIONS

DECK CUTOUTS

A paper template will be enclosed with all rounded-edged models. Use the directions on the paper template for cutout dimensions. **If the paper template has been lost or needs replacement, please contact Customer Service at: 800.945.2726.**

USING THE CUTOUT TEMPLATE

Draw a center line horizontally and vertically on a 1" thick plywood deck. Place the template in the upper left hand quadrant, noted as Quadrant 1 on the diagram below. Trace template to outline Quadrant 1. Flip the paper cutout horizontally, making sure to match the dotted center line on the template with the center line on the plywood. Trace again to outline Quadrant 2. Repeat until the remaining quadrants of the cutout have been traced.

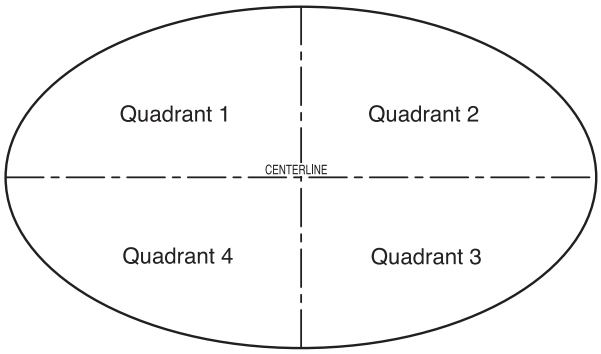

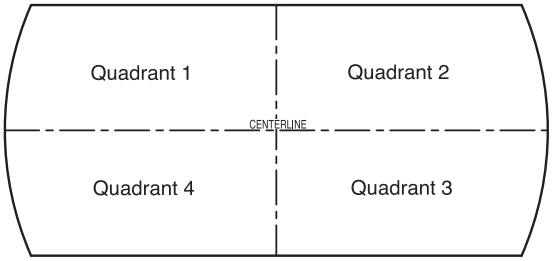

CORNER MODELS

On a 1" thick plywood deck, place the template in the upper section noted as Section 1 in the diagram. Trace Section 1 to establish the centerline and front edge of the cutout. Flip the template along the centerline and trace to complete the other half of the unit noted as Section 2 in the diagram below.

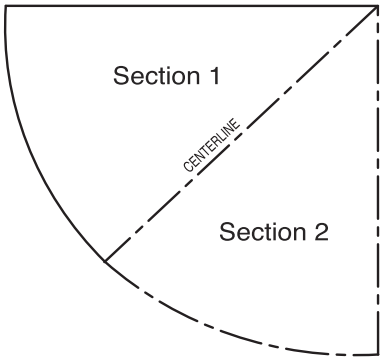

RECTANGLE MODELS

Using a 1" thick plywood deck, the cutout should be 2" smaller than the overall tub dimensions (length & width), for 1" overhangs on all sides. For example, a 72" x 42" unit should have a deck cutout of 70" x 40". Additional dimensions can be found in the technical data sheets at www.aquaticbath.com.

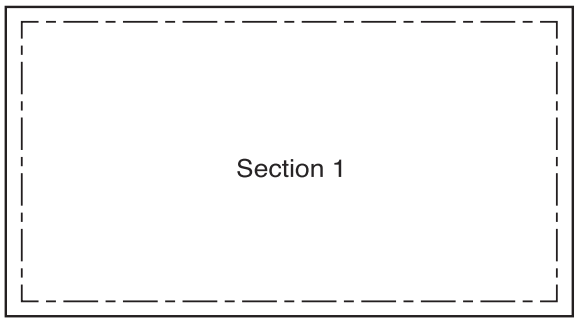

INSTALLATION INSTRUCTIONS

INSTALLATION

WARNING - When using electrical products, basic precautions should always be followed, including the following:

DANGER - RISK OF ELECTRIC SHOCK. Connect only to a circuit protected by a Ground-Fault Circuit-Interrupter (GFCI). (For built-in and custom units.) Install to permit access for servicing.

1. Install outlet(s) as shown. The outlet must be a minimum of 6" above the floor and be accessible through the access panel.

2. Place the bath in the location for installation. Check that the bath is leveled (length and width). A carpenter's level is recommended. If necessary, place shims under support legs. Make measurements for framework construction. Remove bath from location.

3. Construct framework.
   - Ensure that construction and construction materials comply with applicable code requirements for the installation site.
   - All framing must be square, level and designed to provide structural support.
   - Do not allow tub rim to support any of the bath weight.

⚠ WARNING

Installation Recommendation

Use two or more people to move and install jetted bath. Failure to do so can result in back or other injury.

4. An access panel, 16" x 16" minimum, must be provided to allow access to the pump, electrical connections, and other accessories.

5. ALL MODELS WITH LEVELING FEET - The following procedure is recommended for pre-leveled bottoms. Lift unit by the rim and place in alcove or framework. If necessary, shim feet until unit just rests on leveled ledges or framework. Secure the unit by fastening the bottom feet to the subfloor with any construction adhesive. The use of casting plaster or plaster of paris is suggested but not mandatory as a foundation support between floor and bottom of unit to suppress noise and give a solid and stable feel for the user.

6. WHIRLPOOL & SOAKING TUB MODELS WITHOUT LEVELING FEET - (Including island or self rimming units) Just before placing unit in alcove or framework, spread a bed of casting plaster or plaster of paris on the floor or subfloor. Limit the size of bed to dimensions of bottom. Lift unit by the rim and place in alcove or framework. Press down until the tub perimeter rim just rests securely on top of the ledge or framework on all sides. This step is mandatory to prevent shifting after installation and for proper operation, drainage and weight distribution. Use a carpenter's level to check that the unit is leveled.

7. The rim of the bath is not designed to support weight. If finished material is to overlap or contact the bath, the added weight must be fully self-supporting.

IMPORTANT: If a skirt is to be used, it must be installed at the time of tub installation. [See SKIRT INSTALLATION PROCEDURES on page 11.] Install optional trim parts when all installation has been completed.

INSTALLATION INSTRUCTIONS

SKIRT INSTALLATION PROCEDURES

Most (not all) Aquatic integrally skirted whirlpools have color matching removable panels for alcove and corner installations. All integrally skirted units **MUST BE INSTALLED BEFORE** the finished floor and wall materials are installed.

The skirt can be used as an access panel to the pump and controls, and is designed to have the finished wall materials butt up to the acrylic skirt frame and allows installation clearances for baseboard heaters and floor materials.

To remove skirt panel: Simply pry loose at the top corners and pull outward (away from frame).

To reinstall skirt panel: Simply set panel in frame (bottom side first) and push forward. Lightly depress the tabs on the top of the panel while pushing forward until the panel snaps into its frame.

IMPORTANT: Before installation of the skirt, fill the unit and test the whirlpool system and drain waste for leaks. Test the whirlpool system for proper operation.

Skirt kit contents:

a) Molded color matched skirt frames

b) Molded color matched removable skirt panels (if this option has been ordered)

Integrally Skirted

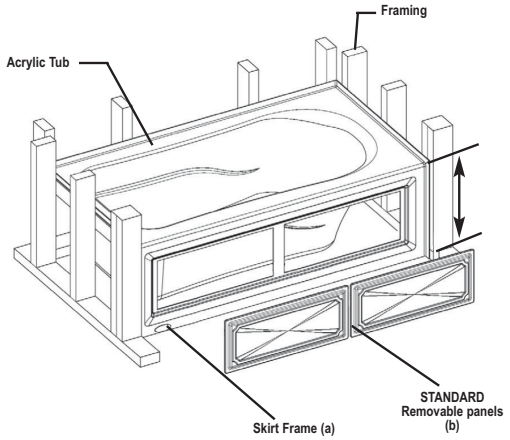

Skirt Panel

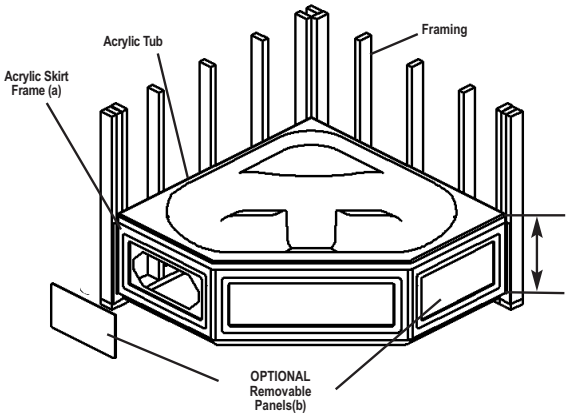

Note: Gelcoat skirt installation instructions are shipped with each panel.

INSTALLATION INSTRUCTIONS

ELECTRICAL CONNECTIONS

READ AND FOLLOW ALL INSTRUCTIONS
All local, state and national electrical codes must be observed by a licensed electrician in connecting power to the Aquatic Whirlpool.

Important Safety Instructions

WARNING - When using electrical products, basic precautions should always be observed, including the following:

1. READ AND FOLLOW ALL INSTRUCTIONS.

2. Circuit - A separate circuit (not to supply any other electrical devices) is required as follows: Each electronic component (pump and heater) must be connected to a separate 120 VAC 15 AMP circuit.

3. GFCI - A Ground-Fault Circuit-Interrupter (GFCI) must be installed in the circuits which bring power to the whirlpool; do not omit. To test the GFCI, push the test button. The GFCI should interrupt power. Push the reset button. Power should be restored. If the GFCI fails to operate in this manner, there is a ground current flowing, indicating the possibility of an electric shock. Do not use this unit. Disconnect the unit and have the problem corrected by a licensed electrician before using.

4. Grounding - Motors and optional heater each have a three prong electrical plug. A ground should be run from J-box receptacle(s) to electrical house panel per code.

5. Bonding - A No. 8 AWG solid copper bonding conductor between all electrical equipment is provided.
   NOTE: Local requirements may supercede this bonding environment. Please check your local requirements for compliance. Double plastic insulated motors have no pressure wire connector as it is not needed.

6. Wall Switch - A remote wall switch is required by many state codes. It must not be within 5 ft (1.5m) reach of a bather while standing in the tub and it must be mounted at a height to be out of the reach of small children. Not further than 10 ft (3.0m) away.

7. Integral On/Off Switch - For an Aquatic Whirlpool supplied with a motor that has an integral on/off switch - Make certain the air tube that is connected to the motor is also connected to the on/off button nipple under the deck in order for the system to function. Air tube must not be kinked, compressed, or slit.

8. Inline Heater (optional) - Units equipped with an inline heater have their own electrical pigtail and three prong plug to be plugged into its own dedicated circuit.

INSTALLATION INSTRUCTIONS

ELECTRICAL CONNECTIONS

Builders' Choice Whirlpool Component Breakdown

Electrical Requirements: 120VAC, 15 Amp GFCI outlet

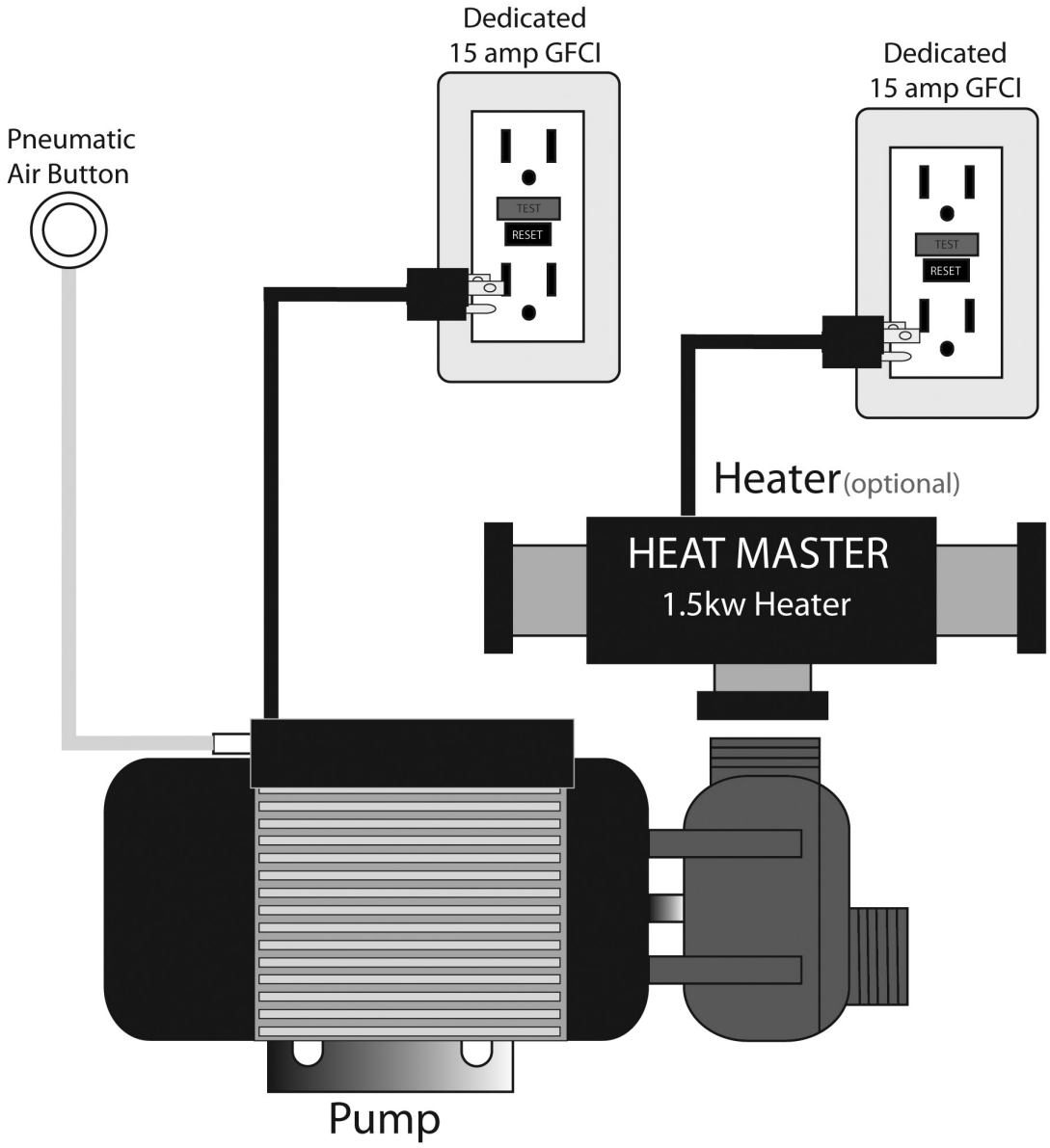

INSTALLATION INSTRUCTIONS

FINAL SYSTEM TEST & CLEAN-UP

System Test

To test system, follow these steps in order listed:

1. Fill clean tub with water to a point no less than 3" (75) above the highest jet.

2. To test the Ground-Fault Circuit-Interrupter (GFCI), push the test button. The GFCI should interrupt power. Push the reset button. Power should be resorted. If the GFCI fails to operate in this manner, there is a ground current flowing, indicating the possibility of an electric shock. Do not use this unit. Disconnect the unit and have the problem corrected by a licensed electrician before using.

3. Push on/off button on the whirlpool.

4. Allow system to run a full 10 minutes.

5. Through access door or removable skirt, check for leaks in whirlpool plumbing system. Make sure half-unions at both ends of pump are hand-tight. If leakage is occurring at any other points, notify distributor.

6. If any electrical malfunctions occur, immediately unplug the unit and consult a licensed electrician. Malfunctions of the pump/motor, whirlpool controls or the circulating system should be reported to the distributor who supplied the whirlpool tub.

Clean-up

1. Remove all construction residue and foreign materials. Wipe unit clean with a damp rag, otherwise staining may occur.

2. Plaster may be removed by scraping with the edge of a piece of wood or rigid plastic. DO NOT use metal scraper. For spots left by plaster or grout: rub lightly with a liquid detergent (Spic-N-Span® or similar) on a damp cloth or sponge.

3. **DO NOT** use abrasive cleaners, scouring powders, steel wool, wire brushes or anything else that may harm or dull the surface.

4. Paint, tar or stubborn stains may be removed with paint thinner, turpentine or rubbing alcohol. To avoid discoloration, cleaners containing petroleum distillate must not remain on surfaces. NEVER use lacquer thinner or chlorinated solvents.

5. Dulled areas can be restored to a high gloss with white or cream-colored automotive rubbing compound, followed by application of carnauba wax or white or cream automotive paste wax and buffing.

6. Major gouges require professional repair. Contact Aquatic to arrange factory-authorized repair services.

OPERATION INSTRUCTIONS

YOUR WHIRLPOOL BATHTUB — WHAT IT IS AND HOW IT WORKS.

Your whirlpool bathtub is a large, extra deep bathtub with a built-in circulating system that mixes the bath water with air and pumps the mixture back into the bathtub creating the hydromassage action. Because it is a bathtub it must be drained after each use.

The circulating system mixes air and water and must never be operated unless the bathtub is filled as described below.

BEFORE YOUR FIRST USE

The professionals who installed your whirlpool bathtub received detailed installation procedures, some of which you need to know about before filling and operating your bathtub for the first time.

1. Make sure bathtub is clean - If there are any residues or foreign materials left from construction, clean the bathtub thoroughly. Use only the methods and materials described in the section entitled ACCEPTABLE CLEANING PROCEDURES FOR ACRYLIC AND GELCOAT SURFACES on page 17-18.

2. Fill bathtub above jets - For your first "test run," fill the bathtub until the water is at least 3" above the highest jet. Never operate the whirlpool unless water is at least this high.

3. Optional remote power switch - A separate switch on your bathroom wall may control power to the whirlpool bathtub. For your safety, it should not be within reach of a person standing in the bathtub and it should be high enough to be out of reach of small children. Please refer to and abide by all state and local plumbing and electrical codes.

Starting the whirlpool system: If installed, set remote power switch to ON.

1. On/off button - Models, so equipped, will have a button mounted on the bathtub. Pushing the button forces a column of air to a control which turns the pump motor on or off.

2. Test the Ground-Fault Circuit-Interrupter (GFCI): Test the GFCI as described in SYSTEM TEST on page 14.] This device should be tested on a routine basis.

3. Directional jet nozzles - The nozzle on each jet rotates freely. You can adjust its position to concentrate the whirlpool action against a specific part of the body or to adjust the overall whirlpool action in the bathtub. Water flow can be adjusted by turning the face plate of the jet. Turning the jet clockwise turns the jet to very low, turning counterclockwise turns the jet to maximum. See Figure 2.

Figure 2

OPERATION INSTRUCTIONS

4. How do jets function?

   Directional Jets: Figure 3

   - Water flow can be adjusted by turning the face plate of the jet.
   - Adjust the pressure by rotating the face plate of individual jets, counterclockwise for more pressure, clockwise for less pressure.

   Rotary Jets: Figure 4

   - Spinning jets add enhanced massage action to the bathing experience.
   - Located in key positions to target back muscles and feet.

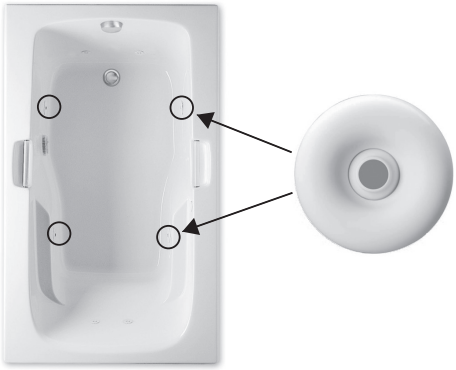

Figure 3

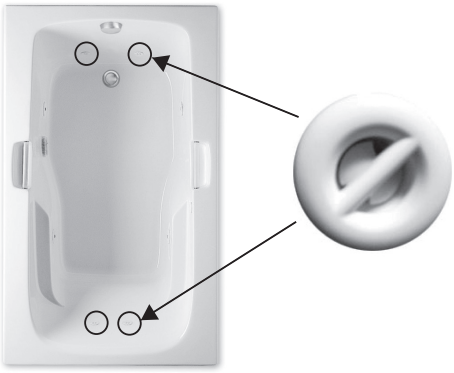

Figure 4

5. Optional in-line heater - The optional inline heater is factory installed and pre-set to maintain water temperature at 104°F (40°C). If the water is too hot, adjust the temperature by adding cold water. Make small adjustments and always test the water prior to entering the tub. The inline heater has a water flow sensor which prevents it from being operated when the pump/motor is off.

   If all systems are "GO" - You're ready for your whirlpool bath.

   If system doesn't operate as described - Turn it off immediately. Go over and repeat each of the preceding steps. If it still won't work refer to the TROUBLESHOOTING GUIDE on page 21.

6. Enter the bathtub. Sit back, stretch out, relax. Push the on/off button (if so equipped).You'll feel water being pumped gently out of the jets. Turn the jet nozzles to direct the air/water mixture against aching or tired limbs and muscles or adjust the nozzles to create maximum whirlpool action in the bathtub. Adjust the pressure by rotating the face plate of individual jets, counterclockwise for more pressure, clockwise for less pressure.

FCC CONSUMER INFORMATION

Electrical Installation Information Listed on pages 12-13.

This equipment generates and uses radio frequency energy and if not installed and used properly, that is, in strict accordance with the manufacturers instruction, may cause interference to radio and television reception. It has been type tested and found to comply with the limits for a class B computing device in accordance with the specifications in subpart J of part 15 of the FCC rules, which are designed to provide reasonable protection against such interference in a residential installation. However, there is no guarantee that interference will not occur in a particular installation. If this equipment does cause interference, which can be determined by turning the equipment on and off, the user is encouraged to try to correct the interference by one or more of the following measures:

- Reorient the receiving antenna.
- Relocate the receiver with respect to the bath tub.
- Move the receiver away from the bath.
- Plug the receiver into a different outlet so that the receiver and bath are on different branch circuits.
- If necessary, the user should consult the dealer or an experienced radio/television technician for additional suggestions.
- The user may find the following booklet prepared by the FCC helpful: "How To Identify and Resolve Radio-TV Interference Problems." It is available from the U.S. Government Printing Office, Washington, DC 20402, Stock No., 004-000-00345-4.

TUB CARE

MAINTENANCE

Cleaning Your Whirlpool Bathtub

IMPORTANT: Use only the recommended cleaners and procedures described in this section. Use of other materials and methods may harm your whirlpool and will **VOID THE WARRANTY**.

Failure to perform periodic maintenance procedures may cause problems and may harm the bathtub, the circulating system and pump, and will **VOID THE WARRANTY.**

- **Monthly Purge:** The whirlpool system must be purged at least once a month.

  To remove accumulations of bath residue from the whirlpool system, we recommend that you purge it at least once a month, or more depending upon usage. To do this, follow this simple procedure:

  1. Fill the bath with hot water (not exceeding 104°F).
  2. Add to the hot water, 4 - 6 tablespoons of low foaming detergent such as liquid Cascade® and 24 - 48 oz. of liquid household bleach, (do not use splashless bleach). Use lesser amounts shown for 5-foot bathtubs, greater amounts for larger bathtubs.
  3. Run the whirlpool for 5 to 10 minutes.
  4. Drain the bath completely and refill with cold water only.
  5. Run the whirlpool for 5 to 10 minutes, then drain the bath completely. Depending on the usage and/or the content of the local water supply, more frequent purging may be necessary.

  If you have followed the monthly purging instructions and still have an excess accumulation of bath residue and desire an alternative cleaning mechanism, we recommend **SUPER SYSTEMS CLEAN PLUS** manufactured by Stearns Packaging Corporation to rectify this condition. This may be obtained by contacting Aquatic at (800) 945-2726. It is recommended that you follow the instructions provided by the manufacturer with the product. Repeated use may be necessary. **SUPER SYSTEMS CLEAN PLUS** does not replace necessity to purge your whirlpool system at least monthly with a low foaming detergent and bleach.

Acceptable Cleaning Procedures for Acrylic and Gelcoat Surfaces

The surface of your whirlpool bathtub will retain its color and gloss indefinitely with normal use, but many bathroom cleaning agents can harm it. Read and follow the cleaning and maintenance instructions in this booklet.

- **To keep your Aquatic unit sparkling clean:** Apply a coat of good quality automotive paste wax and buff to a high shine with a soft cloth or bath towel. Repeat every six months for easier cleaning and long lasting protection. NOTE: Do not wax textured standing/walking surfaces.
- **For normal cleaning,** any non-abrasive liquid cleaner off the shelf may be used. Be sure to read the label and follow the cleanser's recommendations. Do not use harsh abrasives as they will harm and dull the finish of your unit. Instead, use warm water and liquid detergents, especially those bathroom cleaners recommended for cleaning fiberglass or acrylic surfaces, such as Mr. Clean®* All-Purpose, Lysol®* Bathroom, chlorine bleach, Easy-Off®* Mildew stain remover, or Liquid Spic-N-Span®* and the like.

*Note: 3-M is a trademark of 3M.
Cascade and Mr. Clean are registered trademarks of Proctor & Gamble.
Lime-Away, Lysol and Easy-Off are registered trademarks of Reckitt Benckiser, Inc.
Spic-n-Span and Comet are registered trademarks of Prestige Brands.

- **For more difficult stains on your anti-skid floor,** a paste should be made of a cleanser such as Comet®*, Spic-N-Span®*, etc. and spread out onto the floor. Allow the paste to sit for 5 - 10 minutes and then gently scrub with a soft-bristled brush. To prevent scratches, the brush should be no rougher than the texture of a toothbrush.
- **For hard water stains,** calcium deposits, limescale or difficult soap scum after repeated attempts with the above suggestions, you may try Lime-Away®* or white vinegar for removal of calcium or lime deposits. For soap scum, general black grime or algae, chlorine bleach may be used with moderate scrubbing. In both instances the unit should be rinsed carefully with cold water. Scrubbing is never recommended as it could damage the finish on your floor. Always rinse off all remaining paste.
- **To restore a scratched or dull unit:** Use an automotive polishing compound applied with a clean cotton rag. Rub scratches and dull areas vigorously. Wipe off residues. Follow with automotive wax treatment described above.
- **To remove adhesive:** Try 3-M™* Natural Cleaner, or rubbing alcohol and rub vigorously until the adhesive dissolves and disappears. These solvents are highly flammable and must be used sparingly and with caution. Do not smoke or permit others to do so. Make sure all nearby heating devices (including pilot lights) are extinguished. Do not allow solvent to go down the drain. Make sure not to contact plastic drain grates or other synthetic materials.

CAUTION: When using any cleaning or polishing materials, make sure to read and follow all package instructions carefully. Wear rubber gloves at all times and avoid contact with eyes, skin, clothing, rugs and furnishings. Make sure all residues are rinsed off thoroughly.

Rubber mats: If you use a rubber or plastic "anti-skid" mat, make sure to remove it from the unit after each shower to avoid harm to the surface finish.

Hard Water: Water in certain areas, if not wiped up after bathing/showering, may cause fading of some bath fixture colors. This is a natural occurrence beyond Aquatic's control. [See **AQUATIC LIMITED WARRANTY** on page 24.]

REPAIR

The installation and service of your whirlpool/soaker should be performed only by a qualified service technician. Remember when contacting your distributor always have your serial number, proof of purchase and model number available. This will ensure a quick response on warranty items. The model and serial numbers are located above the blower on the backside of the whirlpool/soaker.

NOTE: all warranty repairs must be authorized by aquatic before work is started. For service, always contact your distributor.

CAUTION: Care should be taken to prevent inappropriate chemicals coming in contact with the Lucite® acrylic surface. Please read and observe all instructions and/or warnings on containers containing substances you contemplate applying to your whirlpool/soaker. Any failure to comply may void your warranty.

*Note: 3-M is a trademark of 3M.
Cascade and Mr. Clean are registered trademarks of Proctor & Gamble.
Lime-Away, Lysol and Easy-Off are registered trademarks of Reckitt Benckiser, Inc.
Spic-n-Span and Comet are registered trademarks of Prestige Brands.

WATER QUALITY

CHEMICAL & WATER QUALITY

Owners of fill and drain whirlpool bathtubs need to know basic information concerning water quality, how it affects the performance and enjoyment of the operation of their tubs, and steps that can be taken by the owner to correct related problems. Important issues are the microbiological and chemical quality of the water.

1. Microbiological Quality
   Microbes are present in water supplied by individual wells or water systems and even in the air around us. These microbes are usually in amounts below what is noticeable. Microbes from the water or air or from a bather's body may settle on wet surfaces such as bathtub surface or piping system where they can grow in numbers. With regards to whirlpool bathtubs, brown/black fungi/mold or pigmented (colored) bacteria can be noted.

   Fungi/Mold - Fungi and mold are always present. Usually the levels are such that we don't notice them. When moisture and temperature are sufficient, the organisms will grow to levels that we may smell and/or see. The best examples of such growth is the very common black growth on the bottom of shower curtains. The best solution to keep these surfaces free from fungi/mold growth is frequent cleaning.

   Pigmented Bacteria - A pinkish substance may appear on bathroom fixtures that is very persistent, appearing in the shower, sink and along the water line of toilet bowls. The residue is less likely a problem associated with water quality than with naturally occurring airborne bacteria. The bacteria may produce a pinkish film, and sometimes a dark gray film, on surfaces that are regularly moist, including toilet bowls, shower heads, sink drains, and tiles. The problem is more common in humid areas of the country. In any particular case, the determination of the exact species of bacteria causing the problem would require lengthy and costly laboratory testing; however, most experts believe the bacteria responsible is Serratia Marcescens. These bacteria thrive on moisture, dust and phosphates, and are widely distributed in soil , food and also in animals. The best solution to keep these surfaces free from the bacterial film is continual cleaning. A chlorine containing compound is the best cleaner. Avoid abrasives to limit scratching fixtures, which will make them even more susceptible to bacteria.

2. Chemical Quality
   The water supplied by individual wells or water systems always contains chemicals, usually in amounts below those which the consumer would notice. Examples of such chemicals, which are of potential concern for the owners of whirlpool bathtubs, are calcium and magnesium salts, copper, iron, manganese and sulfates. When these chemicals are present in sufficient amounts, they may cause problems in whirlpool bathtubs. You should contact your water supply or treatment company and follow their suggestions for treatment.

   Calcium and Magnesium Salts - Collectively, the various compounds of calcium and/or magnesium are referred to as salts. Calcium and magnesium salts are often found in ground water supplies and cause "hardness" in water. Hard and soft water are relative terms. Hard water retards the cleaning action of soaps and detergents, causing expense in the form of extra work and cleaning agents. When hard water is heated, it will deposit a hard scale. With regard to whirlpool bathtubs, high calcium and/or magnesium levels may result in the formation of white stains and scale formation on the inside of the tubs, especially noticeable with colored tubs. If this occurs, you need to contact the water supplier to determine the calcium and/or magnesium content and/or corrosion potential of the water and follow their suggestions for treatment. If your water supply is generated from a well, you need to contact a water treatment company to test your water and suggest solutions if a problem is present.

WATER QUALITY

Iron - Iron is found in many natural waters especially from wells. Iron in water can also result from the corrosion of piping in the water supply system, such as cast iron mains or galvanized steel service lines, or galvanized piping in the home water system. High iron levels may result in the formation of brown stains in the vicinity of the faucet outlets of various fixtures in the home. With whirlpool bathtubs, the staining may be particularly pronounced because the aeration action can oxidize iron to a form that settles out on the inside of the tubs, especially noticeable with white tubs. If high iron in the water is present, you can also notice rust colored deposits inside your toilet tank or dishwasher. If this occurs, you need to contact the water supplier to determine the iron content and/or corrosion potential of the water and follow their suggestions for treatment. If your water supply is generated from a well you need to contact the water treatment company to test your water and suggest solutions if a problem is present.

Manganese - Manganese is found in many natural waters especially from wells. High manganese levels may result in the formation of small black particles that can stain laundry, especially noticeable with whites such as sheets or towels. With whirlpool bathtubs, the formation of small black particles may be particularly pronounced because the aeration action in the tub can oxidize manganese to an insoluble form that is especially noticeable with white tubs. If high manganese in the water is present, you may also notice black stains on white laundry. If this occurs, you need to contact the water supplier to determine the manganese content of the water and follow their suggestions for treatment. If your water supply is generated from a well, you need to contact a water treatment company to test your water and suggest solutions if a problem is present.

3. **Treatment**
   If you have contacted your water supplier and followed their instructions and you are still having problems, you need to increase the frequency of cleaning with low-foaming detergent/bleach starting from monthly purging down to using it every other day as required to eliminate your particular problem. The use of certain bath oils, bubble bath soaps and bath additives may increase the level of accumulations of bath residue in the whirlpool system. More frequent cleaning may be necessary if these products are used in the whirlpool tub. If excess accumulations persist, you should discontinue the use of these products. If you have followed the monthly purging instructions and still have an excess accumulation of bath residue and desire an alternative cleaning mechanism, we recommend **SUPER SYSTEMS CLEAN PLUS** (Aquatic Part #ST1010) manufactured by Stearns Packaging Corporation to rectify this condition. This may be obtained by contacting Aquatic at (800) 945-2726. It is recommended that you follow the instructions provided by the manufacturer with the product. Repeated use may be necessary. **SUPER SYSTEMS CLEAN PLUS** does not replace the necessity to purge your whirlpool system at least once a month with a low foaming detergent and bleach.

TROUBLESHOOTING GUIDE

WARNING: Always turn off power at the main electrical service panel when servicing your whirlpool.

SYMPTOMS	POSSIBLE PROBLEMS	SUGGESTED SOLUTIONS
Pump does not start:	1) GFCI or circuit breaker in OFF position. 2) Fuses blown or thermal overload open. 3) Locked motor shaft. 4) Motor windings burned out. 5) Defective starting switch inside single-phase motor. 6) Disconnected or defective wiring. 7) Low voltage.	1) Reset GFCI. 2) Contact your electrician. 3) Contact Aquatic. 4) Contact Aquatic. 5) Contact Aquatic. 6) Check and reconnect if needed. 7) Contact your electrician.
Motor does not reach full speed:	1) Low voltage. 2) Motor windings connected for wrong voltage. 3) Wiring too small. 4) Suction or discharge line partly clogged. 5) Impeller clogged.	1) Contact your electrician. 2) Contact Aquatic. 3) Contact your electrician. 4) Clean and unclog. 5) Clean and unclog.
Pump runs, water not circulating:	1) Leakage of air into suction system. 2) Faulty suction line check valve. 3) Jets may be closed. 4) Suction screen may be clogged. 5) Impeller may be clogged.	1) Check suction screen for clogs. 2) Contact Aquatic. 3) Turn jets counter-clockwise to open water flow. 4) Replace suction screen before operating. While motor is off, unscrew safety suction cover and remove any accumulated debris. If necessary, call a plumber to check the suction line. If problem persists, notify Warranty Services at (800) 945-2726 to arrange a repair service call. 5) Contact Aquatic.
Noisy pump and motor:	1) Worn motor bearings. 2) Pumps touching a stationary object. 3) Suction line partly clogged. 4) Pump not supported properly.	1) Contact Aquatic. 2) Refer to installer/dealer. 3) Clean and unclog. 4) Contact Aquatic.
Leakage of water at shaft:	1) Shaft seal requires replacement.	1) Contact Aquatic.
Leaking unions:	1) O-ring missing or damaged. 2) Loose unions.	1) Contact Aquatic. 2) Tighten unions.
Vibration noise:	1) Tub or tub plumbing is touching tile/wall. 2) Pump is touching framing.	1) Refer to installer/dealer. 2) Refer to installer/dealer.
Whirlpool jets emit water outside of bathtub:	1) Insufficient water in bathtub.	1) Ensure water level is at least 3" above the highest whirlpool jet.
Water leakage:		1) Call a plumber to determine and correct source of leak. If plumber determines that whirlpool system is at fault, notify Aquatic Warranty Services at (800) 945-2726 to arrange a repair service call.
Motor overheats (protector trips):	1) Low voltage. 2) Motor windings connected for wrong voltage. 3) Wiring too small. 4) Suction or discharge line partly clogged. 5) Pump running at reduced speed. 6) Impeller clogged. 7) Pump located in a small space.	1) Contact your electrician. 2) Contact Aquatic. 3) Contact your electrician. 4) Clean and unclog. 5) Reference "SYMPTOMS: Motor does not reach full speed." 6) Clean and unclog. 7) Ensure pump has adequate ventilation and no objects are blocking air flow.
Pump runs and there is water flow, but no heat:	1) Limited water flow will NOT build up enough pressure to allow the heater to come on. 2) System screen may be clogged.	1) Make sure all jets are open to allow a full flow of water through the system. 2) While motor is off, clean the suction screen to assure maximum water flow. Do not operate whirlpool without replacing suction screen.
Pump does not shut off manually:	1) Defective on/off button. 2) Disconnected air hose.	1) Shut off circuit breaker. Contact Aquatic. 2) Shut off circuit breaker. Contact Aquatic.
Circuit breaker trips repeatedly:	1) Defective breaker. 2) Short circuit between bath and breaker box. 3) Other items are connected to the same circuit.	1) Contact electrician. 2) Contact electrician. 3) Contact electrician.

BUILDERS' CHOICE SERIES

REPLACEMENT PARTS MAP

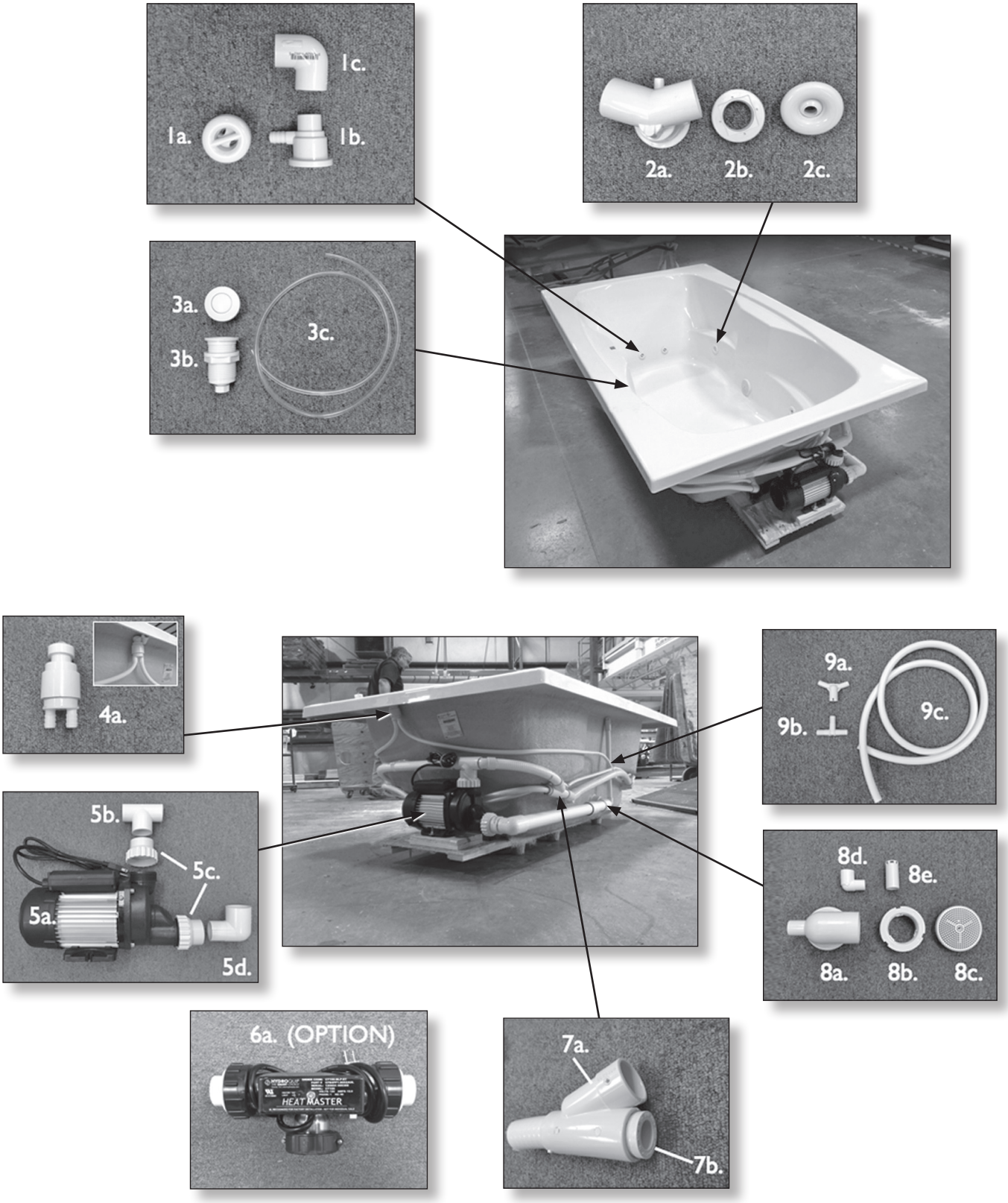

BUILDERS' CHOICE SERIES REPLACEMENT PARTS LIST

ILLUSTRATION #	PART NUMBER	DESCRIPTION
1a.	8188ROTOxx*	MICRO; ROTO INTERNAL
1b.	8188JTB	MICRO; JET BODY
1c.	8406005FTG	1/2" 90 DEG ELBOW; SLIP
2a.	8190VJTB	V-JETBODY; 1" SLIP x 3/8" BARB
2b.	8190WFTG	WALL FLANGE
2c.	8190ASSYxx*	DIRECTIONAL JET FACE; EYE
3a.	8115BUTTNxx*	BUTTON; AIR ON/OFF
3b.	8115BODY	BODY; AIR BUTTON
3c.	8110TUBE	TUBING; 1/8" AIR
4a.	8499FTG + 5982MANIFOLD	1" AIR CHECK VALVE ASSEMBLY
5a.	8078MOTOR	PUMP/MOTOR; 0.75HP
5b.	810250FTG	TEE; BULLHEAD 1"x 1"x 1.5"
5c.	8150UNION	1.5" PUMP UNION
5d.	8409015FTG	1.5" 90 DEG ELBOW; ST
6a. (OPTION)	8095HEATER	1.5KW INLINE MAINTENANCE HEATER
7a.	8415FTG	1" WYE FITTING
7b.	8437130FTG	1"x 0.5" REDUCER BUSHING
8a.	——	SUCTION ELBOW
8b.	——	SUCTION WALL FLANGE
8c.	1126xx*	SUCTION COVER
8d.	8409005FTG	0.5" 90 DEG ELBOW; SLIP
8e.	1119SLIP	0.5" SAFETY SUCTION CHECK VALVE
9a.	B140100	WYE; 3/8" AIR
9b.	8038TEE	3/8" BARB TEE
9c.	1092	3/8" AIR TUBING

* To indicate color, replace "xx" with "WH" for White, "BO" for Bone, "BI" for Biscuit, "AL" for Almond, or "ST" for Sterling Silver.

Aquatic Limited Warranty

For Builders' Choice Whirlpools
Limited Warranty For Original Consumer For Household Usage

WHAT PRODUCTS ARE COVERED

Structures and surface finishes on Whirlpools ("Whirlpools") and Soaking Tubs ("Tubs"), and their support equipment, components, attachments, controls and plumbing equipment. Different warranty periods apply to specific components.

Warranty Periods for Specific Components

10 YEAR STRUCTURAL WARRANTY FOR WHIRLPOOL/TUB SHELL

Aquatic extends to the original consumer purchaser of the acrylic, fiberglass reinforced shell of a Builders' Choice Whirlpool a limited warranty that the shell will retain its structural integrity and configuration and be free of water loss due to a defect in the tub shell for a period of 10 years from the date of purchase, but never more than 11 years from date of manufacture. This limited structural warranty does not apply to attachments to the acrylic, fiberglass reinforced shell, such as plumbing, fittings and other apparatus; these pieces are covered below in a 2 Year Warranty.

10 YEAR SURFACE WARRANTY FOR FACE OF WHIRLPOOL/TUB

The interior surface/face of a Builders' Choice Whirlpool is warranted against fading, blistering, cracking and delamination due to defects in the surface materials for a period of 10 years from the date of purchase, but never more than 11 years from date of manufacture. This surface warranty extends to defects due to surface material mixing or molding. This surface warranty does not apply to fading, cracking, delamination or blistering due to *excessive wear, sun fading or scouring due to cleaning*.

2 YEAR EQUIPMENT WARRANTY FOR SUPPORT EQUIPMENT, COMPONENTS, CONTROLS & PLUMBING EQUIPMENT

All support equipment, components, controls and plumbing equipment on the Builders' Choice Whirlpools are warranted for 2 years from date of purchase, but not more than 3 years from date of manufacture, against defects in workmanship and materials. Pump seals, "O" rings, light bulbs, fuses and pillows are not included in this two-year period. However, these accessories are warranted to be free from defects in materials and workmanship at the time of delivery to the original purchaser. Limited and reasonable costs may be covered for 2 years from purchase, but never more than 3 years from date of manufacture, for limited labor on the support equipment, controls, or plumbing.

EXCLUSIVE REMEDY

Aquatic will, **at its option** and as your sole and exclusive remedy, repair or replace (without removal or installation) the affected components of any defective Unit or System; repair or replace (without removal or installation) the entire defective Unit or System; or refund the then-current list price of the Whirlpool or Tub. In all cases, a reasonable time period must be allowed for warranty repairs to be completed.

WHAT YOU MUST DO

In order to make a claim under these warranties:

1. You must be the original consumer purchaser of the Whirlpools or Tubs.
2. You must promptly notify us within the warranty period of any defect and provide us with any substantiation that we may reasonably request.
   Write to: **Aquatic 1521 N. Cooper, Suite 500, Arlington, TX. 76011.**
3. The whirlpools and tubs must have been installed and maintained in accordance with good industry practice and the specific Aquatic directions contained in the Owner's Manual and Installation Guide. Write for one if you don't have one!

EXCLUSIONS

These warranties do not extend to or do not cover defects caused by:

1. Shipping damage by carriers or installation errors.
2. Accident, acts of God, abuse or misuse.
3. Unreasonable use (including any use for non-bathing purposes or failure to provide reasonable and necessary maintenance as specified in Aquatic Owner's Manual and Installation Guide supplied with the Whirlpool or Tub).
4. Any alteration, customization, or modification of the Whirlpool/Tub or its components.

LIMITATIONS

1. **Aquatic whirlpools and tubs sold for industrial, commercial or hotel use** are warranted for 2 years, but not more than 3 years from date of manufacture, with a limited warranty that the shell will retain its structural integrity and configuration and be free of water loss due to a defect in the tub and the interior surface/face of the whirlpool/tub is warranted against fading, blistering, cracking and delamination due to defects in the surface materials. All support equipment, components, controls and plumbing equipment and limited labor on the support equipment, controls, or plumbing are warranted for 1 year, but not more than 2 years from date of manufacture. Pump seals, "O" rings, light bulbs, fuses and pillows are not included in this two-year period. However, these accessories are warranted to be free from defects in materials and workmanship at the time of delivery to the original purchaser.
2. **In all cases, Aquatic reserves the right to fully satisfy its obligations under the Limited Warranties by refunding the then-current list price of the defective Whirlpool or Tub (or, if the Whirlpool or Tub has been discontinued, of the closest comparable current product).**
3. Aquatic reserves the right to furnish a substitute or replacement component or product in the event a Whirlpool or Tub or any component of these products is discontinued or otherwise unavailable.
4. THESE WARRANTIES ARE NON-TRANSFERABLE TO ANY OTHER PURCHASER OR PARTY OTHER THAN THE ORIGINAL CONSUMER. NO OTHER AGENT OR PARTY CAN GIVE ANY OTHER WARRANTY OR PROMISE ON BEHALF OF AQUATIC. THIS IS THE SOLE WARRANTY FOR YOUR AQUATIC PRODUCT.
5. Aquatic will not cover any installation or reinstallation costs related to this warranty, except under the limited labor allowance under the 2 Year Equipment Warranty above.
6. For indoor use only. Installing whirlpool tub or any of its components outdoors will void your warranty.

GENERAL

This warranty gives you specific legal rights; you may also have other rights, which vary from state to state. THE DURATION OF ANY IMPLIED WARRANTIES, INCLUDING THE IMPLIED WARRANTIES OF MERCHANTABILITY AND FITNESS FOR A PARTICULAR PURPOSE, ARE LIMITED TO THE DURATION OF THE EXPRESS WARRANTIES HEREIN. AQUATIC EXPRESSLY DISCLAIMS LIABILITY FOR INCIDENTAL AND CONSEQUENTIAL DAMAGES, INCLUDING BUT NOT LIMITED TO LOSS OF USE, TIME, INCONVENIENCE, OR LOSS OF USE OF RESIDENCE. SOME STATES DO NOT ALLOW ANY LIMITATION ON HOW LONG AN IMPLIED WARRANTY LASTS, OR THE EXCLUSION OR LIMITATION OF INCIDENTAL OR CONSEQUENTIAL DAMAGES; SO THE ABOVE EXCLUSION MAY NOT APPLY TO YOU.

AQUATIC

The bath people

Customer Service: 800.945.2726 • aquaticbath.com

8MANBLD | Rev. 7/18