SHIMANO

STELLA S A-RB

STL-SW30000

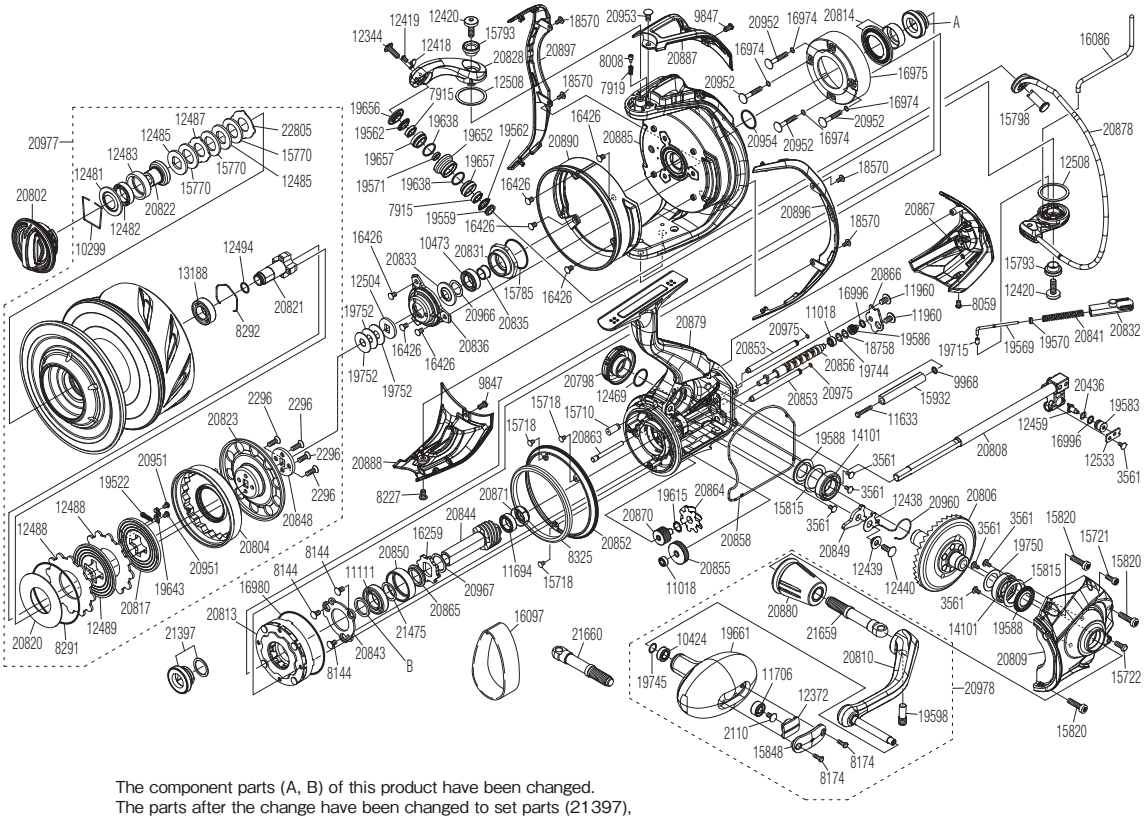

The component parts (A, B) of this product have been changed.
The parts after the change have been changed to set parts (21397),
and the parts before the change have been discontinued.
If you need the A or B parts, order them as a set part (21397) and replace the entire set.
If you need to replace it for maintenance etc., it is recommended that you leave it at the store.
Please note that the number of adjusting washers may not always be the same as shown in the exploded views.
(51SF24Z300X) Please note that your actions take full responsibility when you take it apart.

#	Part No.	Description	#	Part No.	Description	#	Part No.	Description
2110	103E9	Screw	16086	106KK	Bail Trip Lever	20853	10SQL	Oscillating Guide
2296	10MLB	Screw	16259	107ZQ	Ratchet	20855	10SEQ	Idle Gear
3561	10MT4	Screw	16426	103LB	Screw	20856	10SR3	Worm Shaft
7915	104W1	Ball Bearing	16974	10LAD	O Ring	20858	10SR7	Body Seal
7919	1077Q	Click Spring	16975	10MHD	Clutch Water Proof Cover	20863	10SQN	Idle Gear Shaft
8008	10CH8	Click Pin	16980	10MLR	Clutch Cover Water Proof	20864	10SRB	Idle Gear (Large)
8059	10L9D	Screw	16996	10TNF	O Ring	20865	10SRD	Pinion Gear Collar
8144	10ML2	Screw	18570	10MT2	Screw	20866	10SF9	Worm Shaft Retainer
8174	103NM	Screw	18758	10TK0	Washer	20867	1012J	Rear Protector
8227	10CYT	Screw	19522	10E90	Drag Click Assembly	20870	10SF8	Idle Gear (Small)
8291	108WD	O Ring	19559	1014N	Collar	20871	10SF4	Bushing
8292	10LWM	Bearing Retainer	19562	1016K	Line Roller Seal	20878	1012U	Bail Assembly
8325	104AZ	Friction Ring	19569	1016J	Bail Spring Guide A	20879	1012S	Body Assembly
9847	10CYU	Screw	19570	10DUU	Spring Guide A Support Collar	20880	10DTA	Handle Shaft Cover Assembly
9968	108W9	O Ring	19571	1014P	Collar	20885	10SRA	Rotor
10299	10B6K	Retainer	19583	10164	Collar	20887	10SQS	Bail Spring Cover
10424	105BN	Ball Bearing	19586	1015D	Bushing	20888	10SQH	Bail Hold Support Guard
10473	104PS	Ball Bearing	19588	1015Q	Bearing Water Proof	20890	10SQF	Rotor Brim
11018	10PDA	Ball Bearing	19598	10E85	Screw	20896	10SFF	Rotor Guard A
11111	104PV	Ball Bearing	19615	10160	Washer	20897	10SF5	Rotor Guard B
11633	10LSC	Screw	19638	1015S	O Ring	20951	10SC7	Screw
11694	10583	Ball Bearing	19643	1017R	Spring Holder	20952	10RP7	Screw
11706	10KX1	Ball Bearing	19652	1015F	Line Roller	20953	10SCS	Screw
11960	103H6	Screw	19656	10161	Line Roller Plate	20954	1027V	O Ring
12344	10K46	Screw	19657	1015A	Bushing	20960	100SL	Stopper Spring
12372	10B97	Handle Knob Seal	19661	10RDQ	Handle Knob	20966	10HU1	Washer
12418	107LE	Retainer	19715	10R2F	Bail Spring Guide A Bush	20967	10GD6	Washer
12419	107LF	Screw	19744	100XZ	Washer	20975	10B0V	O Ring
12420	10Q86	Screw	19745	104FH	Washer	20977	10TGU	Spool Assembly
12438	102VH	Stopper Cover	19750	101DP	Washer	20978	100XV	Handle Assembly
12439	10J3U	Collar	19752	101DM	Spool Washer A	21397	10U05	Roller Clutch Inner Assembly
12440	103HM	Screw	20436	100CW	Washer	21475	10T1K	Washer
12459	106V5	Oscillating Pawl	20798	10SFB	Handle Screw Cap	21659	10RFJ	Handle Shaft
12469	108WP	O Ring	20802	10SRT	Drag Knob Assembly	22805	1461Z	Eared Washer
12481	10LQZ	Waterproof Sheet	20804	1012Z	Drag Cover Assembly			
12482	10KX7	Ball Bearing	20806	10SQP	Drive Gear Assembly	A	10669	Roller Clutch Inner
12483	10LWS	Bearing Bushing	20808	1012V	Main Shaft Assembly	B	10SEY	Washer
12485	10BA1	Key Washer	20809	1012W	Side Cover Assembly			
12487	10BEB	Eared Washer	20810	10DTD	Handle Shank Assembly			
12488	10C18	Drag Washer B	20813	10SRU	Roller Clutch Assembly			
12489	10BS6	Drag Disk A	20814	1012Y	Roller Clutch Waterproof Assembly			
12494	108WQ	O Ring	20817	10SFD	Drag Disk B			
12504	10J3W	Spool Support A	20820	10SET	Drag Washer C			
12508	10J7H	Washer	20821	10SQZ	Bearing Bushing			
12533	10H7S	Oscillating Pawl Cover	20822	1011U	Bearing Support			
13188	10BGD	Ball Bearing	20823	10SR1	Heat Sink			
14101	104PW	Ball Bearing	20828	1012L	Bail Arm			
15710	10AYR	Body Flange Seal	20831	10SEP	Rotor Nut			
15718	1055G	Screw	20832	10SEN	Bail Spring Guide B			
15721	10A6N	Screw	20833	10SFJ	Bearing Water Proof			
15722	10A6P	Screw	20835	10SR4	Spacer			
15770	10344	Drag Washer A	20836	10RBZ	Retainer			
15785	10CG0	Nut Water Proof	20841	10SEV	Bail Spring			
15793	10K7M	Collar	20843	10SFC	Bearing Retainer			
15798	10Q3F	Line Roller Support	20844	10SQK	Pinion Gear			
15815	10BGG	Washer	20848	10SQJ	Spool Support B			
15820	10PVN	Screw	20849	10SQW	Stopper			
15848	108T1	Handle Knob ID Plate	20850	10SR8	Bearing Housing	16097	109UY	Belt (LL) (accessory)
15932	10AYM	Collar	20852	1012P	Body Flange Ring	21660	10RFX	Handle Shaft (Right) (accessory)