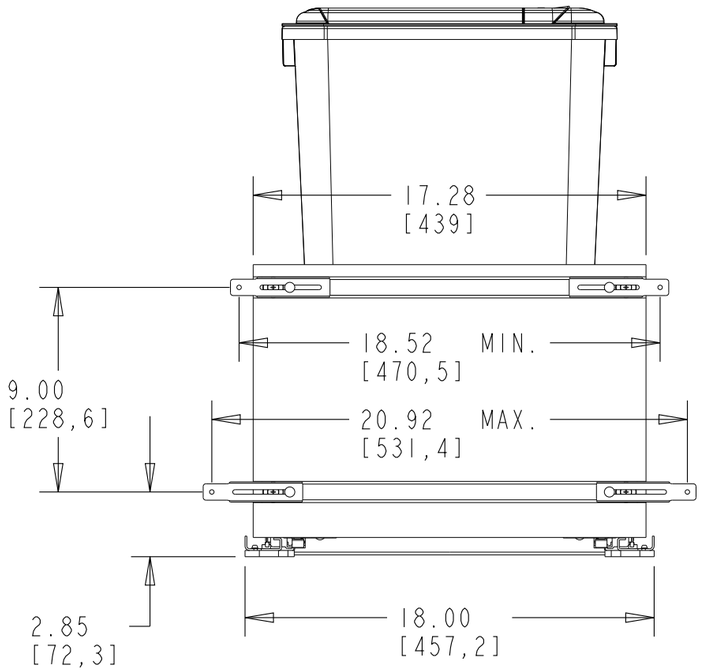

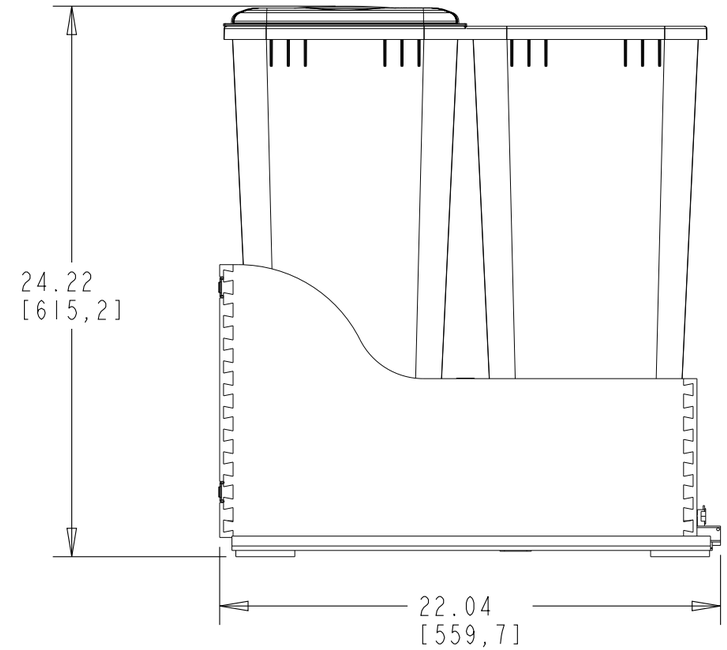

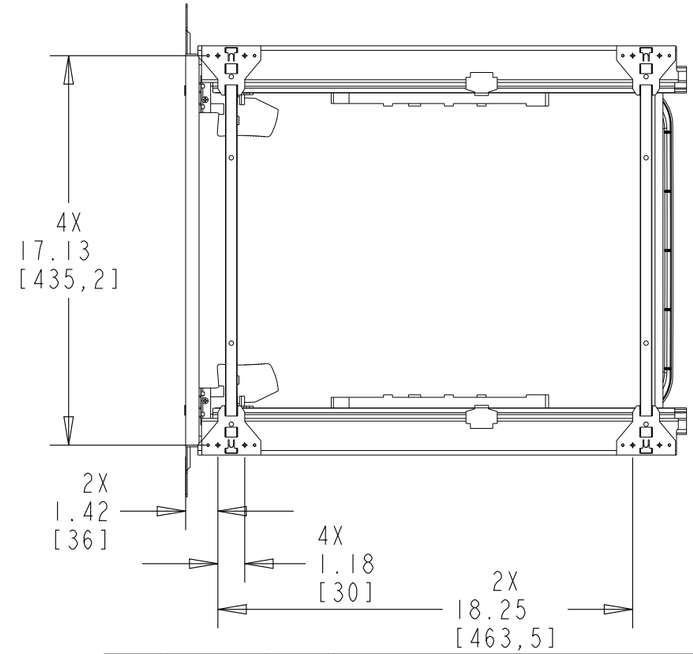

NOTES:
1. FINISH: MAPLE
2. HOLDS (2) 50 QT WASTE CONTAINER

CUSTOMER DRAWING

REV.	DATE	BY	DESCRIPTION OF CHANGE

			BY	DATE	REV-A-SHELF® INC.
INCH [MM]	AMERICAN PROJECTION	DRAWN	KRR	6-2-11	SIZE B — BLUM WCBM 21" CABINET DOUBLE 50 QT
TOLERANCES MAT. DEC. (WOOD) .XX ±.03 [.8mm] (OTHER) .XX ±.02 [.5mm] (ALL) .XXX ±.005 [.13 mm] FRACTIONS ±1/32 [.8 mm]		ANGLES ±1/2°	MATERIAL		DRAWING NO. 4WCSC-2150DM-2_CUST — SCALE 0.150
			FINISH		PART NO. 4WCSC-2150DM-2 — SHEET 1 OF 2

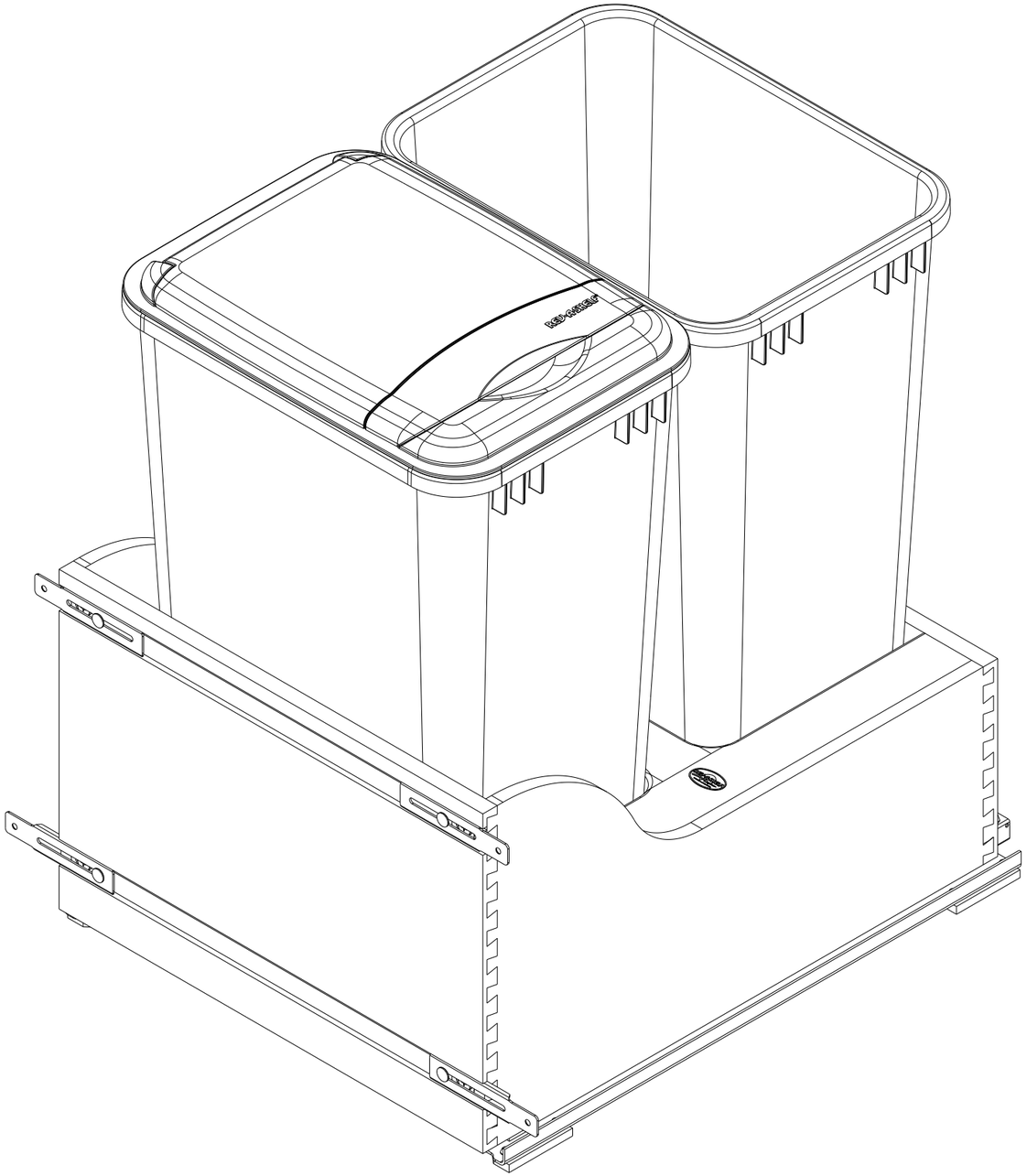

PART DIMENSIONS		
	MIN	MAX
WIDTH	18.00	
DEPTH	22.04	
HEIGHT	24.22	
WEIGHT		
DIAMETER		
RADIUS		
CONTAINTER CAPACITY	50 (X 2)	
CONTAINER UOM	QUART	

MIN CABINET OPENING	
WIDTH	18.00
DEPTH	22.125
HEIGHT	24.50

PRODUCT MAX WEIGHT RATING

SLIDE SPECIFICATIONS				
SLIDE TYPE	UNDERMOUNT	SLIDE EXTENSION	FULL	MAX WEIGHT RATING
SLIDE CLOSING	SOFT	SLIDE LENGTH	21"	
SLIDE MOUNTING	BOTTOM	SLIDE FINISH	ZINC	110 LB

CUSTOMER DRAWING

REV.	DATE	BY	DESCRIPTION OF CHANGE

INCH [MM] — AMERICAN PROJECTION

	BY	DATE
DRAWN	KRR	6-2-11

REV-A-SHELF®, INC.

SIZE B — BLUM WCBM 21" CABINET DOUBLE 50 QT

TOLERANCES
MAT. DEC.
(WOOD) .XX ±.03 [.8mm]
(OTHER) .XX ±.02 [.5mm]
(ALL) .XXX ±.005 [.13 mm]
FRACTIONS ±1/32 [.8 mm]
ANGLES ±1/2°

MATERIAL

FINISH

DRAWING NO. 4WCSC-2150DM-2_CUST

SCALE 0.250

PART NO. 4WCSC-2150DM-2

SHEET 2 OF 2