Wolf Steel Ltd.
24 Napoleon Road, Barrie, Ontario Canada, L4M 0G8

INSTALLATION INSTRUCTIONS

HIGH EFFICIENCY
AIR HANDLERS

1.5-5 Tons

FEATURING R-410A OR R22 REFRIGERANT

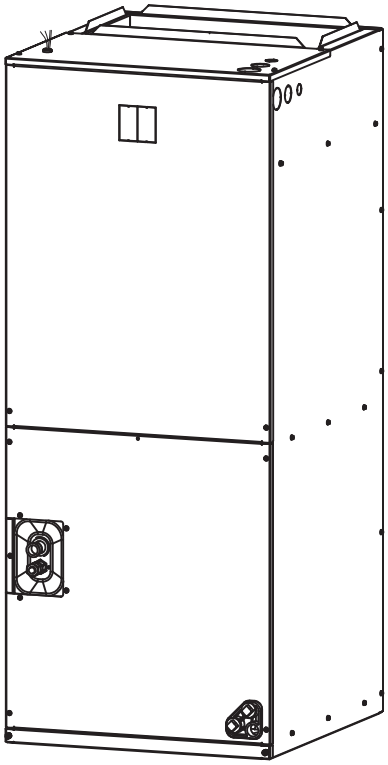

RECOGNIZE THIS SYMBOL AS AN INDICATION OF IMPORTANT SAFETY INFORMATION

WARNING

These instructions are intended as an aid to qualified licensed service personnel for proper installation, adjustment and operation of this unit. Read these instructions thoroughly before attempting installation or operation. Failure to follow these instruction may result in improper installation,adjustment, service or maintenance possibly resulting in fire, electrical shock, property damage, personal injury or death.

C ETL LISTED US
Intertek

DO NOT DESTROY THIS MANUAL
Please read carefully and keep in a safe place for future reference by a serviceman.

CONTENTS

1. SAFETY.....2
2. GENERAL.....3
3. APPLICATIONS.....6
4. ELECTRICAL WIRING.....8
5. AIRFLOW PERFORMANCE.....10
6. DUCTWORK.....11
7. REFRIGERANT CONNECTIONS.....11
8. AIR FILTER (NOT FACTORY-INSTALLED).....12
9. FILTER INSTALLATION DIMENSIONS.....13
10. WIRING DIAGRAM.....14

Air Handler Features

- Multi-speed blower motor.
- Replace piston to TXV easily.
- Multi-position installation - upflow or horizontal right standard; field convertible to horizontal left or downflow.
- Multiple electrical entry locations.
- Field-installed electric heater kits 5, 7.5, 10, 15, 20 kW available as an accessory.
- Dual front panel design for ease of maintenance.
- Blower and coil easy slide out for ease of maintenance.
- Fully-insulated cabinet design.
- Horizontal and vertical condensate drain pans standard.
- Condensate drain pan is polymer with UVC inhibitor.
- Primary and secondary condensate drain fittings.
- Factory-sealed cabinet certified to achieve 2% or less air leakage rate at 1.0 inch water column.
- Integrated filter rack with tool-less door access.
- AHRI and ETL listed.

This document is customer property and is to remain with this unit. These instructions do not cover all the different variations systems nor does it provide for every possible contingency to be met in connection with installation.

All phases of this installation must comply with national state and local codes. If additional information is required, please contact your local distributor.

1. SAFETY

This is a safety alert symbol. When you see this symbol on labels or in manuals, be alert to the potential for personal injury.

This is an attention alert symbol. When you see this symbol on labels or in manuals, be alert to the potential for personal injury.

WARNING

Disconnect all power to unit before installing or servicing. More than one disconnect switch may be required to de-energize the equipment. Hazardous voltage can cause server personal injury or death.

WARNING

If removal of the blower assembly is required, all disconnect switches supplying power to the equipment must be de-energized and locked (if not in sight of unit) so the field power wires can be safely removed from the blower assembly. Failure to do so can cause electrical shock resulting in personal injuring or death.

WARNING

Because of possible damage to equipment or personal injury, installation, service, and maintenance should be performed by a trained, qualified service personnel. Consumer service is recommended only for filter cleaning/replacement. Never operate the unit with the access panels removed.

WARNING

These instructions are intended as an aid to qualified, licensed service personnel for proper installation, adjustment and operation of this unit. Read these instructions thoroughly before attempting installation or operation. failure to follow these instructions may result in improper installation, adjustment, service or maintenance possibly resulting in fire, electrical shock, property damage, personal injury or death.

WARNING

The unit must be permanently grounded. Failure to do so can result in electrical shock causing personal injury or death.

WARNING

PROPOSITION 65: This appliance contains fiberglass insulation. Respirable particles of fiberglass are known to State of California to cause cancer.

All manufacturer products meet current federal OSHA Guidelines for safety. California Proposition 65 warnings are required for certain products, which are not covered by the OSHA standards.

California's Proposition 65 requires warnings for products sold in California that contain or produce any of over 600 listed chemicals known to the State of California to cause cancer or birth defects such as fiberglass insulation, lead in brass, and combustion products from natural vapor.

All "new equipment" shipped for sale in California will have labels stating that the product contains and/or produces Proposition 65 chemicals. Although we have not changed our processes, having the same label on all our products facilitates manufacturing and shipping. We cannot always know "when, or if" products will be sold in the California market.

You may receive inquiries from customers about chemicals found in, or produced by, some of our heating and air-conditioning equipment, or found in natural vapor used with some of our products. Listed below are those chemicals and substances commonly associated with similar equipment in our industry and other manufacturers.

Glass Wool (Fiberglass) Insulation
Carbon Monoxide (CO)
Formaldehyde
Benzene

More details are available at the websites for OSHA (Occupational Safety and Health Administration), at www.osha.gov and the State of California's OEHHA (Office of Environmental Health Hazard Assessment), at www.oehha.org. Consumer education is important since the chemicals and substances on the list are found in our daily lives. Most consumers are aware that products present safety and health risks, when improperly used, handled and maintained.

CAUTION

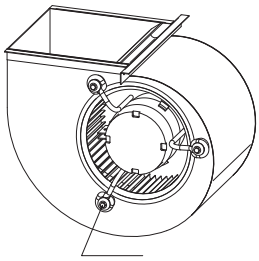

Make sure the blower motor support is tight (3-motor mount bolts) then check to see if wheel is secured to motor shaft before operating unit.

Fig.1 CHECKING MOTOR FIX STATUS

WARNING

The first 6 inches of supply air plenum and ductwork must be constructed of sheet metal as required by NFPA 90B. The supply air plenum or duct must have a solid sheet metal bottom directly under the unit with no openings, registers or flexible air ducts located in it. If flexible supply air ducts are used, they may be located only in the vertical walls of rectangular plenum, a minimum of 6 inches from the solid bottom. Metal plenum of duct may be connected to the combustible floor base, if not, it must be connected to the unit supply duct exposed to the supply air opening from the downflow unit. Exposing combustible (non-metal) material to the supply opening of a downflow unit can cause a fire resulting in property damage, personal injury or death.

Exception warning to downflow:
Installations on concrete floor slab with supply air plenum and ductwork completely encased must be not less than 2 inches of concrete (See NFPA 90A).

2. GENERAL

The unit can be positioned for bottom return air in the upflow position, left and right return in the horizontal position, top return in downflow position.

This Air Handler provides the flexibility for installation in any upflow or downflow horizontal application. The direct drive motors provide a selection of air volume to match any application. 3-Speed motors provide selections of air flow to meet desired applications.

Top and side power and control wiring, accessible screw terminals for control wiring all combine to make the installation easy, and minimize installation cost. See Fig.6.

Do not install unit in an area where flammable materials are present due to the risk of an explosion resulting in serious injury or death.

WARNING

If the supporting structural members are not strong enough to take the unit's weight, the unit could fall out of place and cause serious injury.

If a return-air duct is not installed, carefully select the place and method of product installation so that air flow into the product will not be blocked.

The unit should be installed in a level position to ensure proper condensation drainage. Up to an additional ¼" rise over the width or depth of the unit is allowed to create additional sloping towards the drain. Unit must be positioned between level and ¼" rise, sloping toward the drain connections.

Install the indoor and outdoor unit, power supply wiring and connecting wires at least 3.5 ft. away from televisions or radios in order to prevent image interference or noise.

To ensure the proper installation, select a solid and level site.

Ensure enough space maintained for installation and maintenance. See Fig.2 and Fig.3.

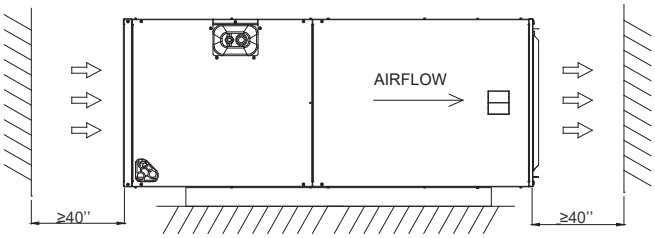

Fig.2 CLEARANCES IN THE HORIZONTAL POSITION

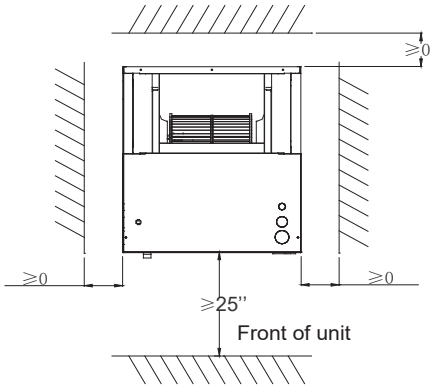

Fig.3 CLEARANCES IN THE VERTICAL POSITION

When the unit is installed in a hot and humid place, If the humidity inside the installation space might exceed 86℉ and RH 80%, it is recommended to insulate the cabinet exterior.

Use glass wool or polyethylene foam as insulation so that the thickness is more than 2 in. and fits inside the installation space opening.

Respectively, condensation may form on the surface of the insulation. Be sure to use insulation that is designed for use with HVAC Systems

Condensation may form on the product during cool operation. It is also recommended to use second drain pan and secure the unit firmly to prevent it from falling.see Fig.4 and Fig.5 .

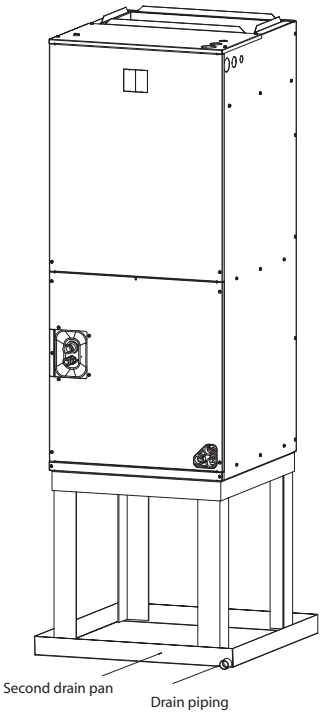

Fig.4 INSTALLED VERTICALLY

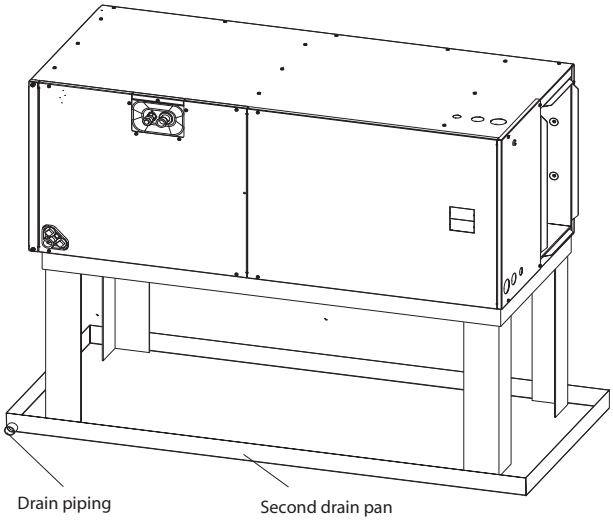

Fig.5 INSTALLED HORIZONTALLY

2.1 UNIT DIMENSIONS

NOTE: 25” CLEARANCE IS REQUIRED IN THE FRONT OF THE UNIT FOR FILTER AND COIL MAINTENANCE.

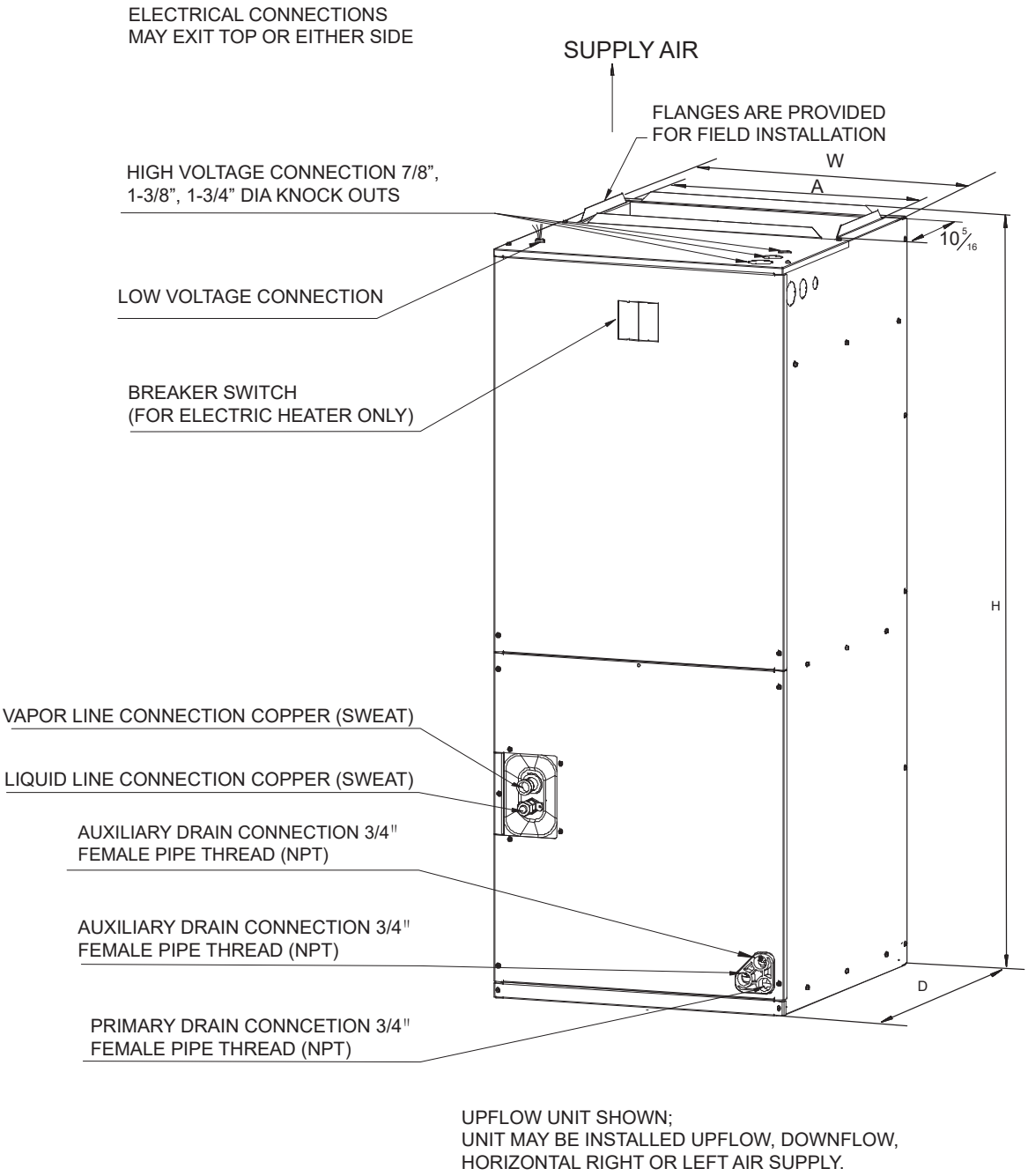

Fig.6 DIMENSIONS

DIMENSIONAL DATA

MODEL SIZE	Dimensions inch [mm]				UNIT WEIGHT /SHIPPING WEIGHT (LBS.[kg])
	UNIT HEIGHT "H" IN. [mm]	UNIT WIDTH "W" IN.[mm]	UNIT LENGHT "D" IN.[mm]	SUPPLY DUCT "A"	
24	41-3/8"[1050]	18-1/8"[460]	20-1/2"[520]	16"[406]	101/114 [46]/[52]
36	46-1/2"[1180]	19-5/8"[500]	21-5/8"[550]	18"[456]	125/141 [57]/[64]
48	54-1/2"[1385]	22"[560]	24"[610]	19-1/2"[496]	159/177 [72]/[80]

3 APPLICATIONS

3.1 VERTICAL UPFLOW

- Vertical Upflow configuration is the factory set on all models.See Fig.6.

- If return air is to be ducted, install duct flush with floor.
  Use fireproof resilient gasket 1/8 to 1/4 in. thick between the ducts, unit and floor. Set unit on floor over opening.

IMPORTANT NOTE

Torque applied to drain connections should not exceed 15ft.lbs.See Fig.6&7.

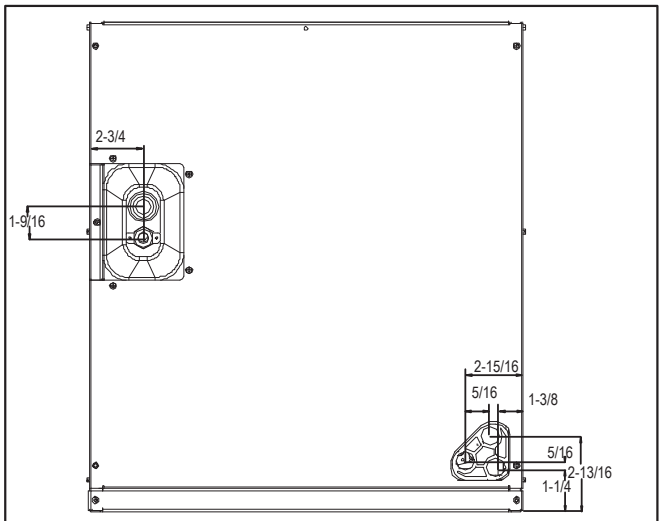

Fig.7 DIMENSIONS FOR FRONT CONNECT COIL

3.2 VERTICAL DOWNFLOW

Conversion to Vertical Downflow: A vertical upflow unit may be converted to vertical downflow. Remove the door and indoor coil and reinstall 180° from original position. See Fig.8.

IMPORTANT: To comply with certification agencies and the National Electric Code for downflow application, the circuit breaker(s) on field-installed electric heater kits must be re-installed per procedure below so that the breaker switch “on” position and marking is up and, “off” position and marking is down.

- To rotate breaker(s): Rotate one breaker set (circuit) at a time starting with the one on the right. Loosen both lugs on the load side of the breaker. (Make sure that wires are identified and are reinstalled into proper breaker).Wires are bundled with wire ties, one bundle going to the right lug and one bundle going to the left lug.
- Using a screwdriver or pencil, lift white plastic tab with hole away from breaker until breaker releases from mounting opening.
- With breaker held in hand, rotate breaker so that “on” position is up, “off” position is down with unit in planned vertical mounting position. insert right wire bundle into top right breaker lug, ensuring all strands of all wires are inserted fully into lug, and no wire insulation is in lug.
- Tighten lug as tight as possible while holding circuit breaker. Check wires and make sure each wire is secure and none are loose. Repeat for left wire bundle in left top circuit breaker lug.
- Replace breaker by inserting breaker mounting tab opposite white pull tab in opening, hook mounting tab over edge in opening.
- With screwdriver or pencil, pull blue tab with hole away from breaker while setting that side of breaker into opening. When breaker is in place, release tab, locking circuit breaker into location in opening.
- Repeat above operation for remaining breaker(s) (if more than one is provided).
- Replace single point wiring jumper bar, if it is used, on line side of breaker and tighten securely.
- Double check wires and lugs to make sure all are secure and tight. Check to make sure unit wiring to circuit breaker load lugs match that shown on the unit wiring diagram.

CAUTION

When using the unit with electrical heater, the switch is used only for electrical heater on the front of panel.

3.3 HORIZONTAL

Horizontal right is the default factory configuration for the units.
Horizontal left isn’t the default factory configuration for the units.
Conversion to Horizontal left: A vertical upflow unit may be converted to horizontal left by removing indoor coil assembly and reinstalling coil as shown for left hand air supply.

- Rotate unit into the downflow position, with the coil compartment on top and the blower compartment on bottom. See Fig. 8.
- Reinstall the indoor coil 180° from original position. Ensure the retaining channel is fully engaged with the coil rail. See Fig. 8.
- Secondary drain pan kits are recommended when the unit is configured for the horizontal position over a finished ceiling and/or living space.

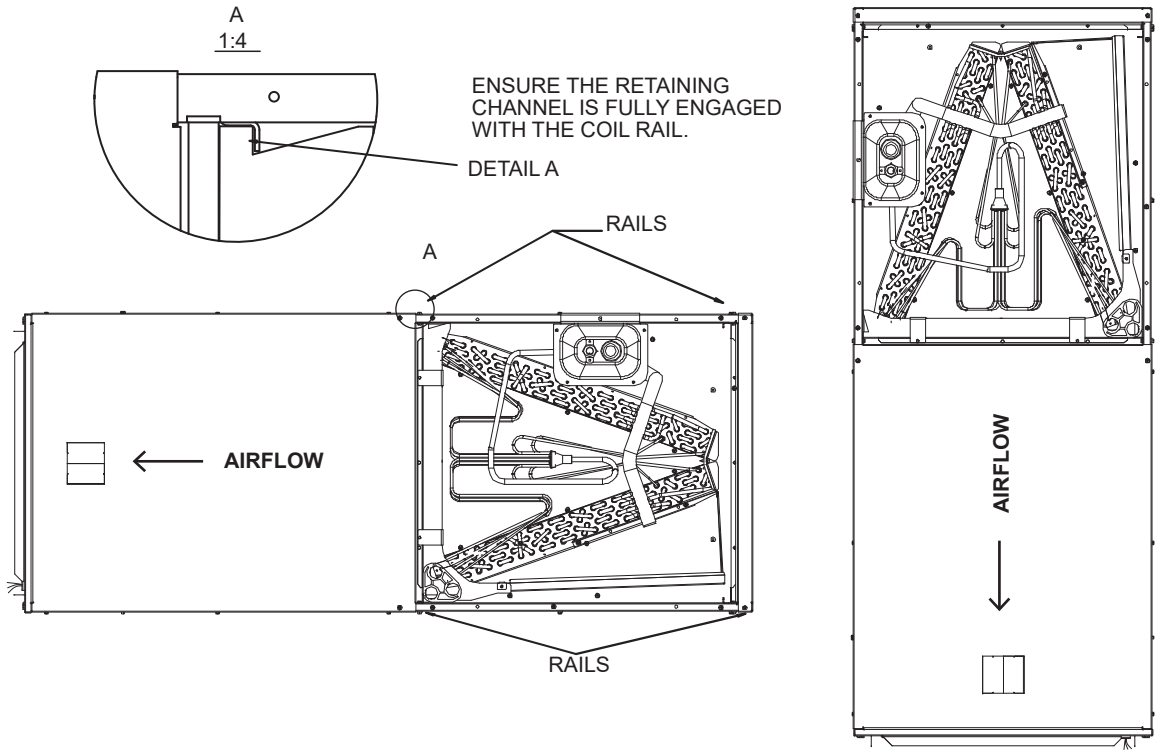

Fig.8 VERTICAL DOWNFLOW & HORIZONTAL LEFT APPLICATIONS
(lower front service panel removed “view”.)

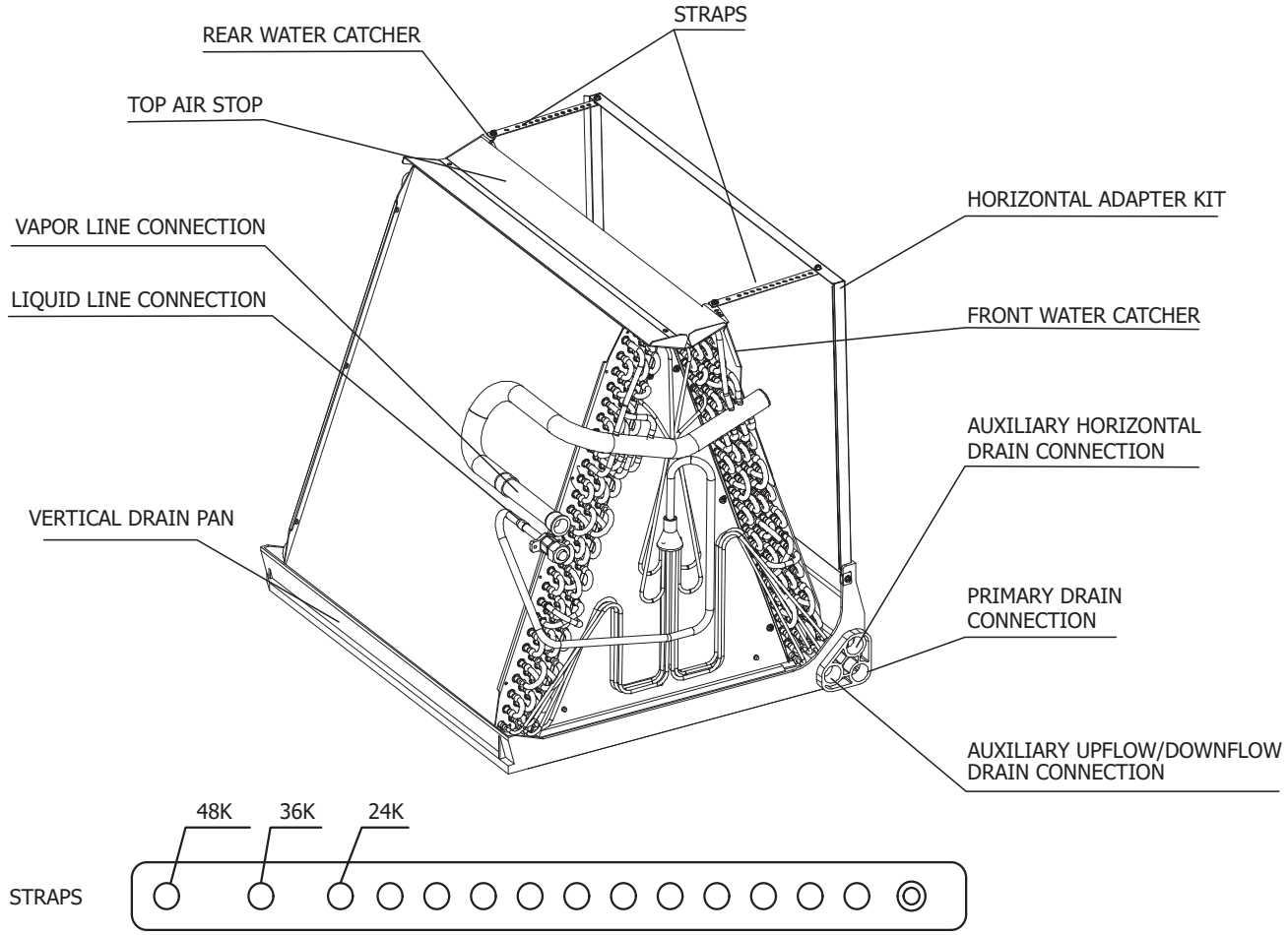

Fig.9 INDOOR COIL AND DRAIN PAN SET-UP

CAUTION

Horizontal units must be configured for right hand air supply or left hand air supply. Horizontal drain pan must be located under indoor coil. Failure to use the drain pan can result in property damage.

Conversion in Horizontal Direction: Horizontal right-hand supply can be changed to horizontal left-hand supply by removing the indoor coil and reinstalling 180° from original.

3.4 INSTALLATION IN AN UNCONDITIONED SPACE

IMPORTANT: There are two pairs of coil rails in the air handler for default and counter flow application. If the air handler is installed in an unconditioned space, the two unused coil rails should be removed to minimize air handler surface sweating. The coil rails can be easily removed by taking off the 6 mounting screws from both sides of the cabinet.

4. ELECTRICAL WIRING

Field wiring must comply with the National Electric Code (C.E.C. in Canada) and any applicable local ordinance.

WARNING

Disconnect all power to unit before installing or servicing. More than one disconnect switch may be required to de-energize the equipment. Hazardous voltage can cause severe personal injury or death.

4.1 POWER WIRING

It is important that proper electrical power is available for connection to the unit model being installed. See the unit nameplate, wiring diagram and electrical data in the installation instructions.

- If required, install a branch circuit disconnect of adequate size, located within sight of, and readily accessible to the unit.
- **IMPORTANT:** After the Electric Heater is installed, units may be equipped with one two or three 30-60 amp. circuit breakers. These breaker(s) protect the internal wiring in the event of a short circuit and serve as a disconnect. Circuit breakers installed within the unit do not provide over-current protection of the supply wiring and therefore may be sized larger than the branch circuit protection.
- Supply circuit power wiring must be 75°C minimum copper conductors only. See Electrical Data in this section for ampacity, wire size and circuit protector requirement. Supply circuit protective devices may be either fuses or “HACR” type circuit breakers.
- Power wiring may be connected to either the right, left side or top. Three 7/8", 1-3/8", 1-3/4" dia. concentric knockouts are provided for connection of power wiring to unit.
- Power wiring is connected to the power terminal block in unit electric cabinet.

4.2 CONTROL WIRING

IMPORTANT: Class 2 low voltage control wiring should not be run in conduit with main power wiring and must be separated from power wiring, unless class 1 wire of proper voltage rating is used.

- Low voltage control wiring should be 18 Awg. color-coded. For lengths longer than 100 ft., 16 Awg. wire should be used.
- Low voltage control connections are made to low voltage pigtails extending from top of air handler (upflow position - see Fig3).
- Connections for control wiring are made with wire nuts. Control wiring knockouts (5/8" and 7/8") are also provided on the right and left side of the unit for side connection.
- See wiring diagrams attached to indoor and outdoor sections to be connected.
- Make sure, after installation, separation of control wiring and power wiring has been maintained.

4.3 GROUNDING

WARNING

The unit must be permanently grounded. Failure to do so can result in electrical shock causing personal injury or death.

- Grounding may be accomplished by grounding metal conduit when installed in accordance with electrical codes to the unit cabinet.
- Grounding may also be accomplished by attaching ground wire(s) to ground lug(s) provided in the unit wiring compartment.
- Ground lug(s) are located close to wire entrance on left side of unit (up-flow). Lug(s) may be moved to marked locations near wire entrance on right side of unit (up-flow). If alternate location is more convenient.
- Use of multiple supply circuits require grounding of each circuit to lug(s) provided in unit.

4.4 ELECTRICAL DATA

MODEL	VOLTAGE	HERTZ	HP	SPEEDS	CIRCUIT AMPS.	MAXIMUM CIRCUIT PROTECTOR
24	208/230	60	1/3	5	2.6	15(A)
36	208/230	60	1/2	5	3.0	15(A)
48	208/230	60	3/4	5	4.5	15(A)

4.5 "WHK" ELECTRIC KIT MCA/MOP DATA

Heat Kit Model	(kW)Electric Heat	MIN. Circuit Ampacity		MAX.Fuse or Breaker (HACR) Ampacity	
		240	208	240	208
WHK-05A	5	27	23	30	25
WHK-08A	7.5	40	34	45	35
WHK-10A	10	53	46	60	50
WHK-15B	15	79	68	80	70
WHK-20B	20	105	91	110	100

"WHK" ELECTRIC KIT & AHU MATCHED TABLE

Heat Kit Model	(kW)Electric Heat	Model 24		Model 36	Model 48
		1.5 Ton	2-2.5 Ton		
WHK-05A	**5**	●	●	●	●
WHK-08A	**7.5**	●	●	●	●
WHK-10A	**10**	×	●	●	●
WHK-15B	**15**	×	×	●	●
WHK-20B	**20**	×	×	●	●

* Heat kit suitable for AHU 4-way position installation[● means available，X means not available].

5. AIRFLOW PERFORMANCE

Airflow performance data is based on cooling performance with a coil and no filter in place. Select performance table for appropriate unit size. External static applied to unit allows operation within the minimum and maximum limits shown in table below for both cooling and electric heat operation.

AIRFLOW PERFORMANCE DATA

Air Handler Model	Outdoor Unit Size(Tons)	Motor Speed		CFM Wet Coil without filter and Electric Heat								
				External Static Pressure-Inches W.C.[kPa]								
				0[0]	0.1[.025]	0.2[.050]	0.3[.075]	0.4[0.100]	0.5[0.125]	0.6[0.150]	0.7[0.175]	0.8[0.200]
24	2	1	SCFM	590	544	511	447	404	345	311	273	239
			Power/W	49	57	64	70	75	82	91	97	102
			Current/A	0.77	0.81	0.84	0.87	0.91	0.94	0.99	1.02	1.11
		2	SCFM	681	633	591	535	490	446	388	354	313
			Power/W	63	69	77	83	90	96	103	111	118
			Current/A	0.84	0.87	0.93	0.96	0.99	1.03	1.07	1.13	1.16
		3	SCFM	788	736	687	648	597	558	511	473	429
			Power/W	86	91	100	108	114	121	128	133	142
			Current/A	0.95	0.99	1.11	1.14	1.18	1.21	1.26	1.31	1.37
		4 (Factory Default)	SCFM	883	842	796	758	717	681	642	599	524
			Power/W	121	128	135	144	151	159	165	173	181
			Current/A	1.21	1.28	1.32	1.38	1.43	1.47	1.54	1.59	1.64
		5	SCFM	1103	1073	1036	998	967	934	896	855	814
			Power/W	233	241	249	258	265	275	281	286	291
			Current/A	1.97	2.03	2.09	2.16	2.22	2.29	2.34	2.37	2.41
36	3	1	SCFM	898	752	603	511	405	360	301	259	203
			Power/W	78	72	65	60	54	48	41	38	36
			Current/A	0.68	0.64	0.59	0.52	0.46	0.42	0.36	0.29	0.28
		2	SCFM	1026	902	810	694	630	544	490	409	366
			Power/W	109	99	106	111	120	126	135	140	148
			Current/A	0.94	0.86	0.91	0.95	1.03	1.07	1.14	1.18	1.24
		3	SCFM	1161	1114	1052	992	893	825	768	694	646
			Power/W	148	158	164	175	187	193	203	209	219
			Current/A	1.26	1.34	1.39	1.48	1.57	1.61	1.69	1.73	1.81
		4 (Factory Default)	SCFM	1287	1244	1186	1142	1078	969	914	892	893
			Power/W	194	205	211	221	233	241	252	253	253
			Current/A	1.62	1.69	1.75	1.83	1.93	1.98	2.07	2.08	2.11
		5	SCFM	1491	1442	1396	1348	1302	1243	1150	1088	1029
			Power/W	290	298	307	318	325	337	351	362	367
			Current/A	2.35	2.42	2.49	2.58	2.64	2.73	2.83	2.92	2.96
48	4	1	SCFM	1344	1284	1226	1151	1076	946	904	893	869
			Power/W	143	151	159	168	177	191	197	195	194
			Current/A	1.23	1.26	1.33	1.41	1.50	1.61	1.63	1.61	1.62
		2	SCFM	1531	1477	1418	1366	1299	1239	1138	1064	1001
			Power/W	200	211	222	231	239	250	266	277	291
			Current/A	1.73	1.74	1.81	1.89	2.02	2.14	2.22	2.31	2.38
		3 (Recommended)	SCFM	1647	1592	1538	1490	1436	1378	1315	1215	1140
			Power/W	244	254	263	273	283	300	305	325	336
			Current/A	2.03	2.11	2.14	2.19	2.31	2.38	2.53	2.64	2.72
		4 (Factory Default)	SCFM	1875	1822	1774	1729	1677	1629	1581	1533	1473
			Power/W	340	353	365	375	388	399	412	423	437
			Current/A	2.73	2.79	2.86	3.02	3.12	3.21	3.29	2.38	3.51
		5	SCFM	2021	1967	1924	1879	1828	1785	1742	1694	1641
			Power/W	409	416	429	447	461	471	487	500	513
			Current/A	3.21	3.29	3.38	3.52	3.61	3.73	3.76	3.86	4.04

--- Shaded boxes represent airflow outside the required 300-450 cfm/ton.

NOTES: Airflow based upon cooling performance at 230V with no electric heat and no filter.Airflow at 208V is approximately the same as 230V because the mult-tap ECM motor is a constant torque motor. The torque doesn't drop off at the speeds in which the motor operates.
The air distribution system has the greatest effect on airflow. The duct system is totally controlled by the contractor. For this reason, the contractor should use only industry-recognized procedures.
Heat pump systems require a specified airflow for electric heat operating. Each ton of cooling requires between 350 and 450 cubic feet of air per minute (CFM), or 400 CFM nominally.
Duct design and construction should be carefully done. System performance can be lowered dramatically through bad planning or workmanship. Air supply diffusers must be selected and located carefully. They must be sized and positioned to deliver treated air along the perimeter of the space. If they are too small for their intended airflow, they become noisy. If they are not located properly, they cause drafts. Return air grilles must be properly sized to carry air back to the blower. If they are too small, they also cause noise.
The installers should balance the air distribution system to ensure proper quiet airflow to all rooms in the home. This ensures a comfortable living space.
An air velocity meter or airflow hood can be used to balance and verify branch and system airflow (CFM).

6. DUCTWORK

Field ductwork must comply with the National Fire Protection Association NFPA 90A, NFPA 90B and any applicable local ordinance.

WARNING

Do not, under any circumstances, connect return ductwork to any other heat producing device such as fireplace insert, stove, etc. Unauthorized use of such devices may result in fire, carbon monoxide poisoning, explosion, personal injury or property damage.

Sheet metal ductwork run in unconditioned spaces must be insulated and covered with a vapor barrier. Fibrous ductwork may be used if constructed and installed in accordance with SMACNA Construction Standard on Fibrous Glass Ducts. Ductwork must comply with National Fire Protection Association as tested by UL Standard 181 for Class I Air Ducts. Check local codes for requirements on ductwork and insulation.

- Duct system must be designed within the range of external static pressure the unit is designed to operate against. It is important that the system airflow be adequate. Make sure supply and return ductwork, grills, special filters, accessories, etc. are accounted for in total resistance. See airflow performance tables in this manual.
- Design the duct system in accordance with “ACCA” Manual “D” Design for Residential Winter and Summer Air Conditioning and Equipment Selection. Latest editions are available from: “ACCA” Air Conditioning Contractors of America, 1513 16th Street, N.W., Washington, D.C. 20036. If duct system incorporates flexible air duct, be sure pressure drop Information (straight length plus all turns) shown in “ACCA” Manual “D” is accounted for in system.
- Supply plenum is attached to the 3/4” duct flanges supplied with the unit. Attach flanges around the blower outlet.

  IMPORTANT: If an elbow is included in the plenum close to the unit, it can not be smaller than the dimensions of the supply duct flange on the unit.

  IMPORTANT: The front flange on the return duct if connected to the blower casing must not be screwed into the area where the power wiring is located. Drills or sharp screw points can damage insulation on wires located inside unit.
- Secure the supply and return ductwork to the unit flanges, using proper fasteners for the type of duct used and tape the duct-to-unit joint as required to prevent air leaks.

7. REFRIGERANT CONNECTIONS

Keep the coil connections sealed until refrigerant connections are made. See the Installation Instructions for the outdoor unit for details on line sizing, tubing installation, and charging information.

Coil is shipped with Nitrogen. Evacuate the system before charging with refrigerant.

Install refrigerant tubing so that it does not block service access to the front of the unit.

Nitrogen should flow through the refrigerant lines while brazing.

Use a brazing shield to protect the cabinet’s paint and a wet rag to protect the rubber grommet and input pipe’s pistion seal ring from being damaged by torch flames.

After the refrigerant connections are made, seal the gap around the connections with pressure sensitive gasket.

WARNING

Use a wet rag to protect the two seal ring in the input pipe from being damaged by torch flames while brazing.

After the work is finished,make sure to check that there is no vapor leak After checking for vapor leaks,be sure to insulate the piping connections referring to Fig.10.

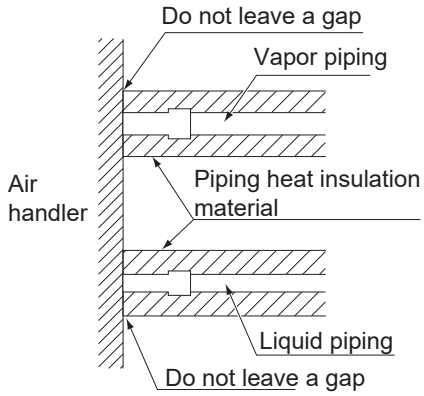

Fig.10 PIPING CONNECTIONS

7.1 CONDENSATE DRAIN TUBING

Consult local codes for specific requirements.

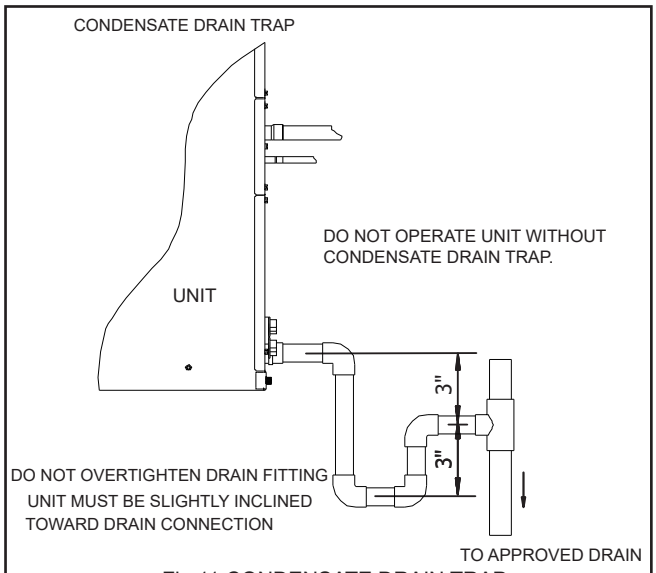

Fig.11 CONDENSATE DRAIN TRAP

IMPORTANT:

1. When making drain fitting connections to the drain pan, use a thin layer of Teflon paste, silicone or Teflon tape and install, hand tighten.
2. When making drain fitting connections to drain pan, do not overtighten. Over tightening fittings can split pipe connections on the drain pan.

- Install drain lines so they do not block service access to front of the unit. Minimum clearance of 24 inches is required for filter, coil or blower removal and service access.
- Make sure unit is level or pitched slightly toward primary drain connection so that water will drain completely from the pan. (See Fig.11)
- Do not reduce drain line size less than connection size provided on condensate drain pan. Use 3/4" PVC piping for drain piping connections.
- All drain lines must be pitched downward away from the unit a minimum of 1/8" per foot of line to ensure proper drainage.
- Do not connect condensate drain line to a closed or open sewer pipe. Run condensate to an open drain or run line to a safe outdoor area.
- The drain line should be insulated where necessary to prevent sweating and damage due to condensate forming on the outside surface of the line.
- Make provisions for disconnecting and cleaning of the primary drain line should it become necessary. Install a 3 inch trap in the primary drain line as close to the unit as possible. Make sure that the top of the trap is below connection to the drain pan to allow complete drainage of pan (See Fig. 11).
- Auxiliary drain line should be run to a place where it will be noticeable if it becomes operational. Homeowner should be warned that a problem exists if water should begin running from the auxiliary drain line.
- Plug the unused drain connection with the plugs provided in the parts bag, using a thin layer of teflon paste, silicone or teflon tape to form a water tight seal.
- Test condensate drain pan and drain line after installation is complete. Pour water into drain pan, enough to fill drain trap and line. Check to make sure drain pan is draining completely, no leaks are found in drain line fittings, and water is draining from the termination of the primary drain line.
- Be sure to insulate the drain piping and drain socket since condensation may cause water leakage.
- Be sure to install a drain trap at the drain outlet since the inside of the unit is at negative pressure relative to atmospheric pressure during operation.

8. AIR FILTER (not factory-installed)

External filter or other means of filtration is required. Units should be sized for a maximum of 300 feet/min air velocity or what is recommended for the type filter installed.

Filter application and placement are critical to airflow, which may affect the heating and cooling system performance. Reduced airflow can shorten the life of the system's major components, such as motor, limits, elements, heat relays, evaporator coil or compressor. Consequently, we recommend that the return air duct system have only one filter location. For systems with a return air filter grill or multiple filter grills, can have a filter installed at each of the return air openings.

If adding high efficiency filters or electronic air filtration systems, it is very important that the air flow is not reduced. If air flow is reduced the overall performance and efficiency of the unit will be reduced. It is strongly recommended that a professional installation technician is contacted to ensure installation of these such filtration systems are installed correctly.

IMPORTANT: Do not double filter the return air duct system. Do not filter the supply air duct system. This will change the performance of the unit and reduce airflow .

WARNING

Do not operate the system without filters. A portion of the dust entrained in the air may temporarily lodge In the duct runs and at the supply registers. Any circulated dust particles could be heated and charred by contact with the air handler elements. This residue could soil ceilings, walls, drapes, carpets and other articles in the house.

Soot damage may occur with filters in place, when certain types of candles, oil lamps or standing pilots are burned.

9. FILTER INSTALLATION DIMENSIONS

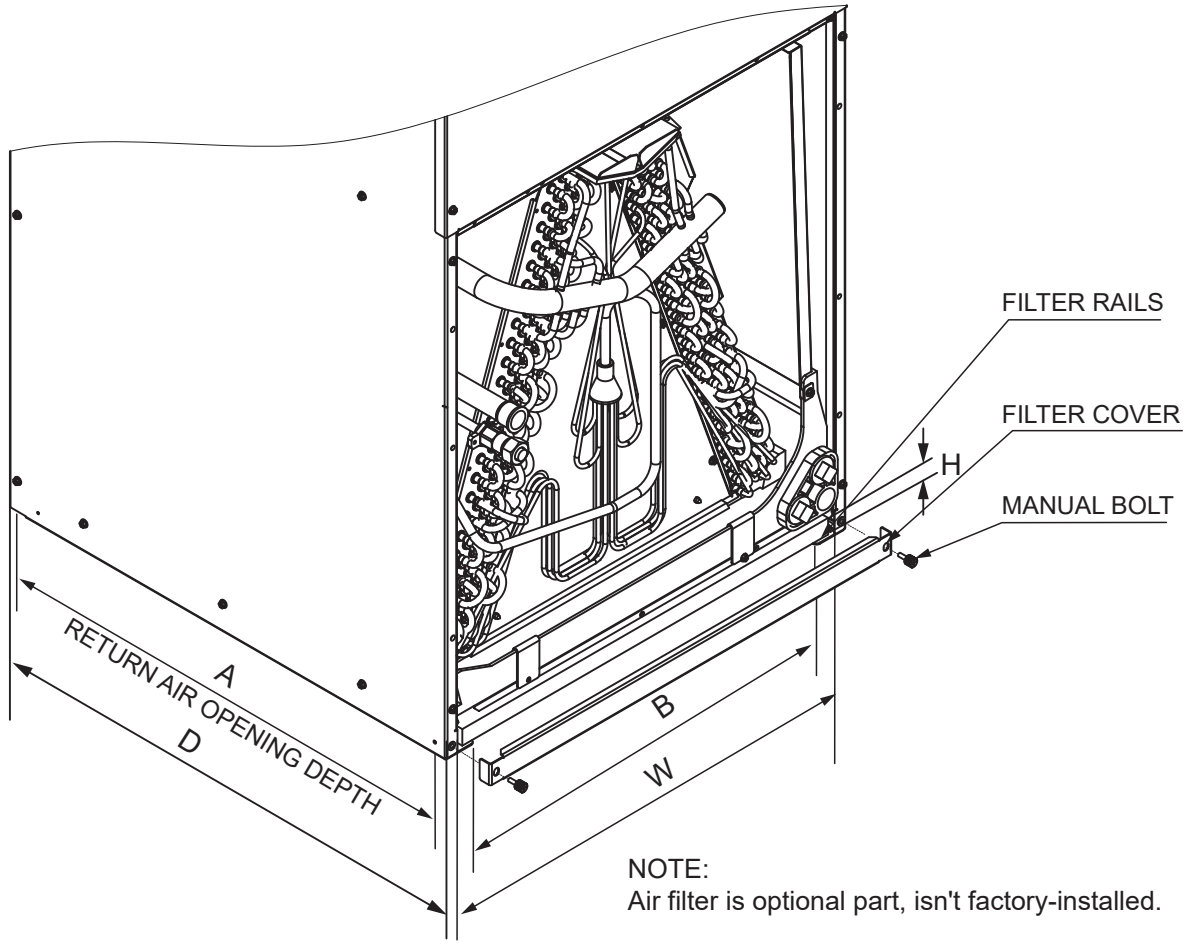

Fig.12 EXTERNAL FILTER BASE

DIMENSIONAL DATA

MODEL	FILTER SIZE IN [mm]	"W" IN [mm]	"D" IN [mm]	"H" IN [mm]	Return width "A" IN	Return length "B" IN
24	16X20[406X508]	16.8[426]	20.4[518]	1[25.4]	19.6	14.8
36	18X20[457X508]	18.3[466]	21.6[548]	1[25.4]	20.8	16.3
48	20X22[508X559]	20.7[526]	23.9[608]	1[25.4]	23	18.8

- AIR FILTER REMOVAL

1. Remove bolts manually, remove air filter recover, see in Fig.12.
2. Hold the edge of the air filter and extract out.
3. Clean the air filter (Vacuum cleaner or pure water may be used to clean the air filter. If the dust accumulation is too heavy, use soft brush and mild detergent to clean it and dry out in cool place).See in Fig.13.
4. Install new filter so that the arrow on the filter is in the same direction as airflow.

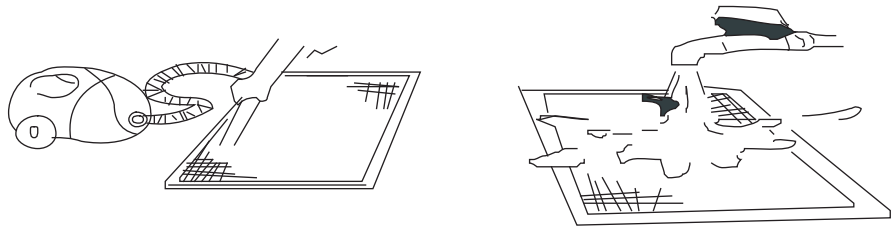

Fig.13 AIR FILTER CLEAN

10.WIRING DIAGRAM

1. To avoid the electrical shock, please connect the air conditioner with the ground lug. The main power plug in the air conditioner has been joined with the ground wiring, please don't change it freely.
2. The power socket is used as the air conditioner specially.
3. Don't pull the power wiring hard.
4. When connecting the air conditioner with the ground, observe the local codes.
5. If necessary, use the power fuse or the circuit, breaker or the corresponding scale ampere.

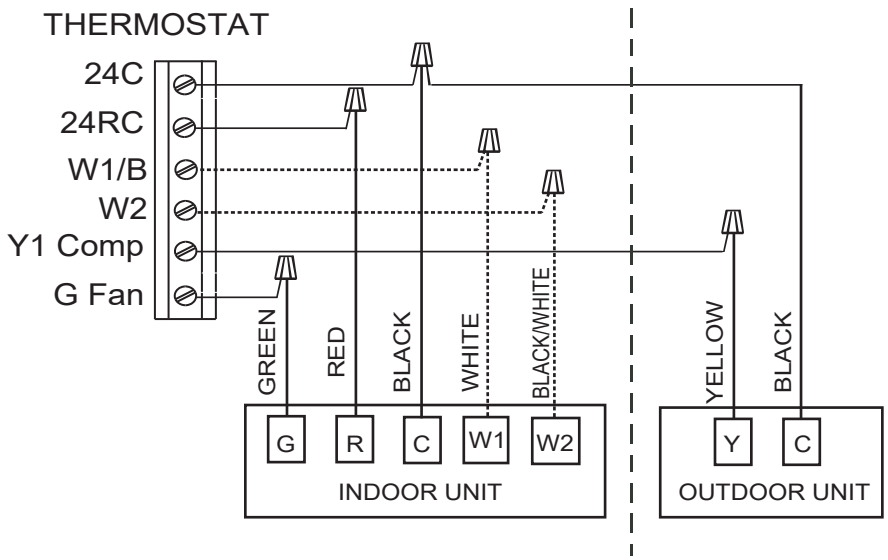

Fig.14 CONTROL WIRING FOR AC SYSTEMS

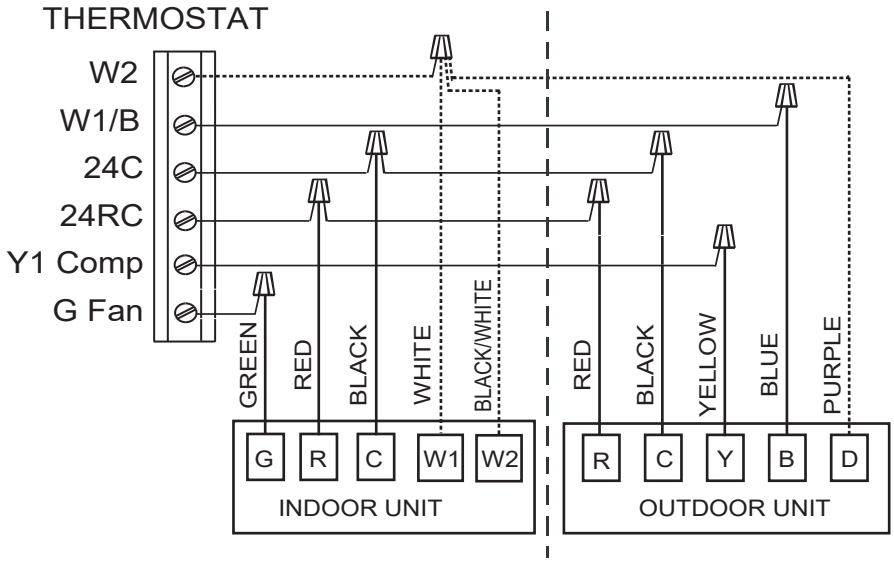

Fig.15 CONTROL WIRING FOR HP SYSTEMS

WARNING

HIGH VOLTAGE!
DISCONNECT ALL POWER BEFORE SERVICING OR INSTALLING THIS UNIT. MULTIPLE POWER SOURCES MAY BE PRESENT. FAILURE TO DO SO MAY CAUSE PROPERTY DAMAGE, PERSONAL INJURY OR DEATH.

SCHEMATIC DIAGRAM

SEE RATING PLATE FOR VOLTS&HERTZ

FIELD POWER WIRING

CAUTION:
NOT SUITABLE FOR USE ON SYSTEMS EXCEEDING 150V TO GROUND
ATTENTION:
NE CONVIENT PAS AUXINSTALLATIONS DE PLUS DE 150V ALA TERRE

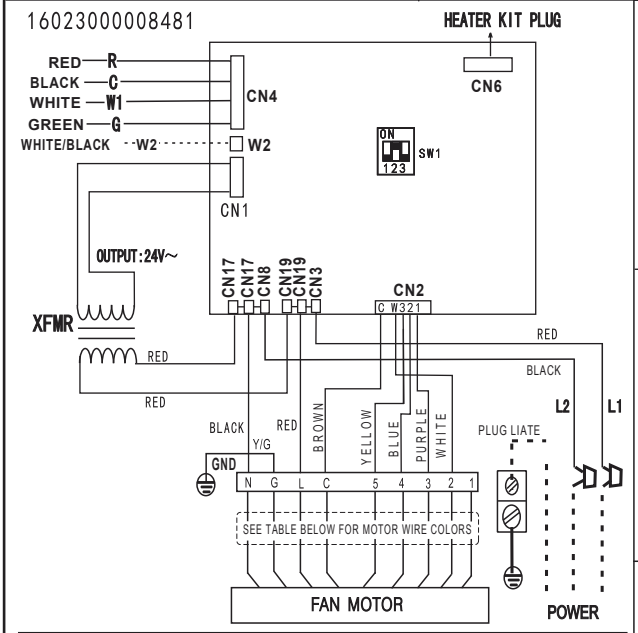

	N	GND	L	C	5	4	3	2	1
FM WIRE CONFIG 1	YEL	Y/G	BLK	BRN	GRY	WHT	ORG	BLU	BLK
FM WIRE CONFIG 2	BLU	GRN	RED	WHT	PINK	GRY	BRN	YEL	BLK

NOTES:

1: Use Copper Wire (75˚C Min) Only Between Disconnect Swicth And Unit .
2: To Be Wired In Accordance With NEC And Local Codes.
3: If Any Of The Original Wire ,As Supplied,Must Be Replaced.Use The Same Or Equivalent Type Wire.
4: Connect R To R,G To G,Etc.See Outdoor Instruction For Details.
5: To Change Speed Tap,Adjust Dip Switches(SW1).
6: See Airflow Tables For Airflow Settings.

DIP SWITCH SETTINGS

ON 123	PROHIBITED IN THIS STATE
ON 123	3 MEDIUM
ON 123	4 MEDIUM HIGH
ON 123	5 HIGH

SPEED TAPS

1	LOW
2	MEDIUM LOW
3	MEDIUM
4	MEDIUM HIGH
5	HIGH

SEE NOTE 6

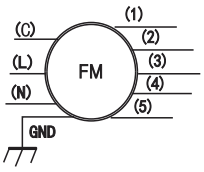

TFMR TRANSFORMER
FL FUSE LINK
FM FAN MOTOR
CAP FAN CAPACITOR
GND GROUND
- - - FIELD POWER WIRING

Fig.16: FACTORY DEFAULT WIRING DIAGRAM

OUTDOOR UNIT SIZE (TONS)	1.5T/3.5T	2.5T/4T	2T/3T/5T* *Default wiring
MOTOR TERMINAL SETTINGS	WHITE, YELLOW, BLUE, PURPLE 5 4 3 2 1	YELLOW, BLUE, PURPLE, WHITE 5 4 3 2 1	YELLOW, BLUE, PURPLE, WHITE 5 4 3 2 1
COOLING AND FAN ONLY SPEED DIP SWITCH SETTINGS	ON 123: PROHIBITED IN THIS STATE ON 123: 1 LOW ON 123: 2 MEDIUM LOW ON 123: 3 MEDIUM	ON 123: PROHIBITED IN THIS STATE ON 123: 2 MEDIUM LOW ON 123: 3 MEDIUM ON 123: 4 MEDIUM HIGH	ON 123: PROHIBITED IN THIS STATE ON 123: 3 MEDIUM ON 123: 4 MEDIUM HIGH ON 123: 5 HIGH

NOTES:

1. Air handler systems use the 2T/3T/5T wiring diagram as the factory default setting.
2. When the air handler system matches with a different capacity outdoor unit, refer to the diagram to adjust the motor terminal settings and dip switch settings.

Fig.17: FAN SPEED SETTING DIAGRAM

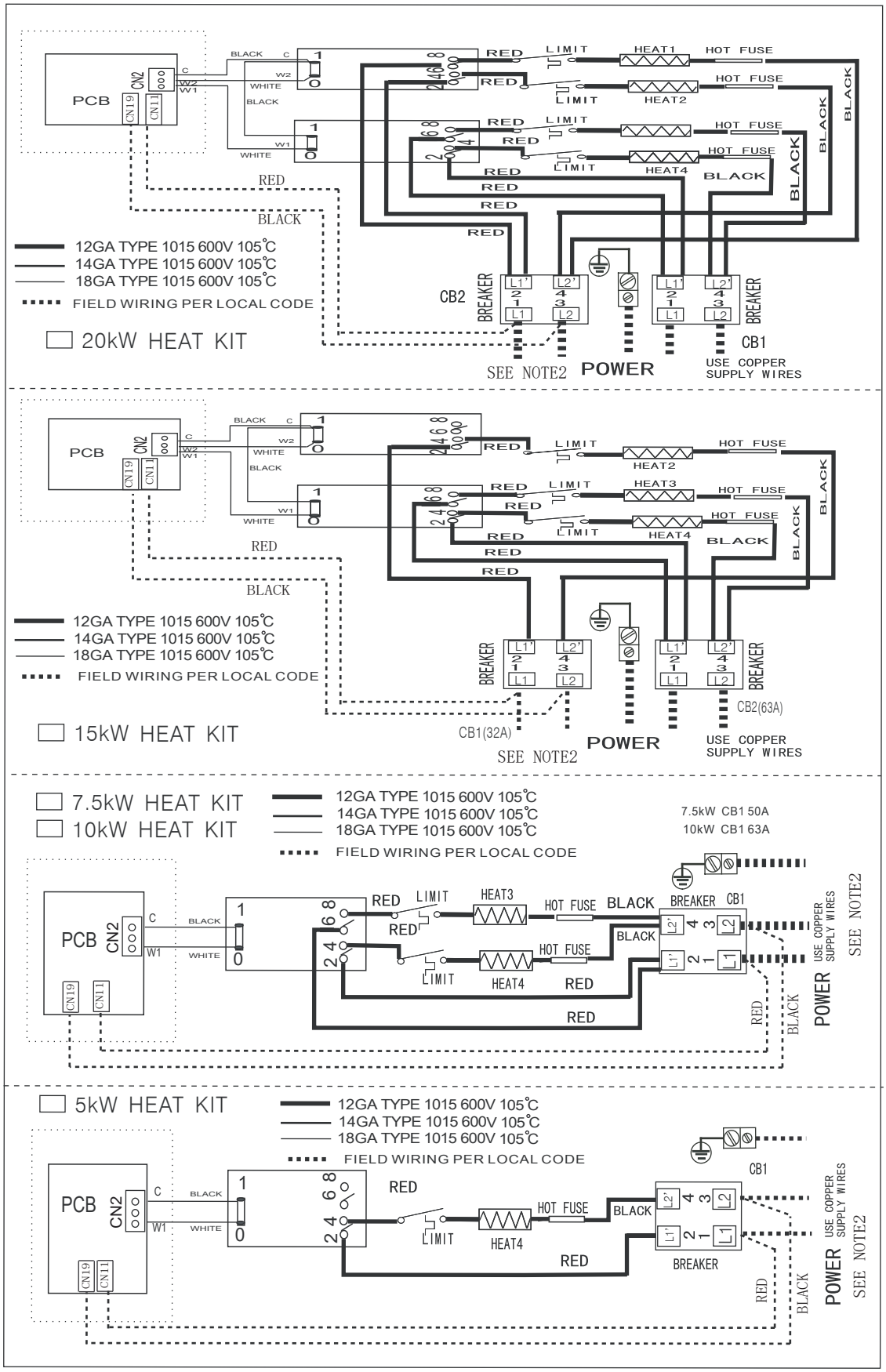

Fig.18:Indoor Unit Wiring Diagram for Electric Heat

This coil comes with a factory installed piston metering device. See Table 1 for factory installed piston size. Some system combinations will require a different sized piston to be field installed.

- Contact your local parts center to order the appropriate MAYORIACHP piston kit for your system combination.
- Use Table 3 for TXV kit part numbers.

A TXV may be required to achieve minimum efficiency ratings or for long refrigerant line set applications. Reference AHRI for system combination ratings.

Reference Table 4 to charge the system by superheat when using a piston. Reference the outdoor unit installation guide to change the system by subcooling when using a TXV.

Table1. Factory installed piston size for each model. Additional piston sizes are provided in the ship-with literature bag as necessary.

Model	50	52	56	58	63	65	68	70	73	75	80	83	90
24		X*		X									
36		X		X		X			X*				
48												X*	

* means that this piston is pre-installed

WARNING

Failure to install the proper piston can lead to poor system performance and possible compressor damage.

Table 2 . Optional TXV kit part numbers. Some combinations may require a TXV. See AHRI for system combination ratings.

Outdoor Unit Capacity (Tons)	R410a TXV Kit
1.5-3.0	3-ton
3.5-4.0	4-ton
5	5-ton

Table 3.Superheat Charging Chart

Charge the system by superheat when using a piston. Reference the outdoor unit installation guide to charge the system by subcooling when using a TXV.

Outdoor Temp(°F)	Indoor Temperature(°F) Dry Bulb/wet Bulb					
	95/79	90/75	85/71	80/67	75/63	70/58
	Superheat (°F)					
115	23	16	7	6	5	5
110	24	17	9	6	5	5
105	26	19	11	6	5	5
100	27	21	13	7	6	5
95	29	23	14	9	6	5
90	30	25	18	12	7	5
85	32	26	20	15	9	6
80	34	28	22	17	11	6
75	35	30	24	19	13	7
70	37	32	26	21	16	10
65	38	34	29	24	19	13
60	40	36	31	27	22	17
55	41	37	34	30	26	21

16123000001412 V.K