SIDES	BOTTOM

1 PCS #5/16-18 Hex Nut Installed

1 PCS #5/16-18×1-1/4 Screws Installed

Material:Steel-0.0866″-G60 Galvanized

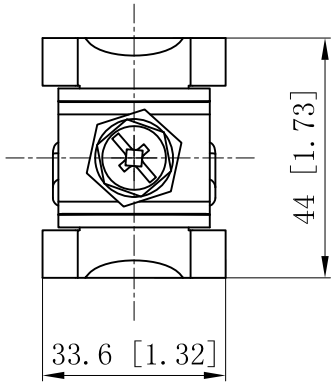

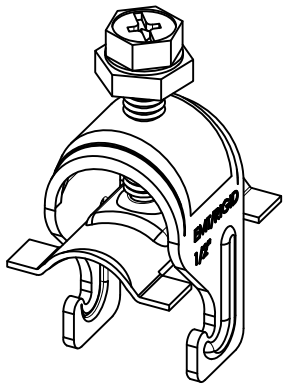

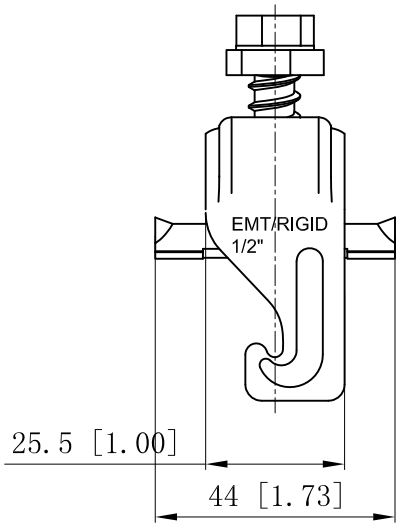

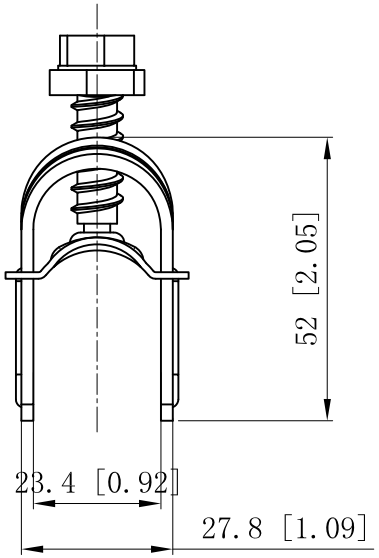

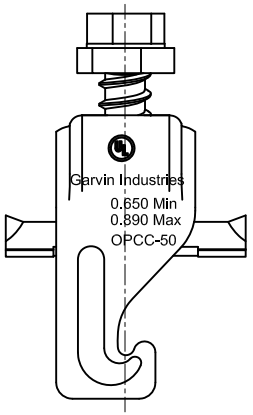

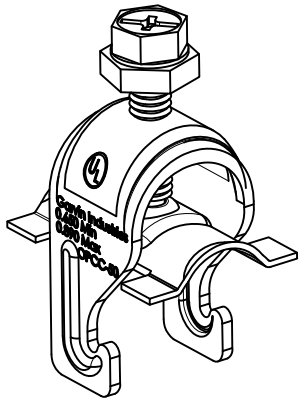

This data sheet is for reference only .GARVIN INDUSTRIES reserves the right to make changes to the design without prior notice.

DESCRIPTION

TRADE REFERENCE TERMS

STANDARD PACKING

GARVIN INDUSTRIES

TITLE

One Piece Strut Clamp

SIZE	DWG NO.	REV
A4	OPCC-50	

DATA SHEET