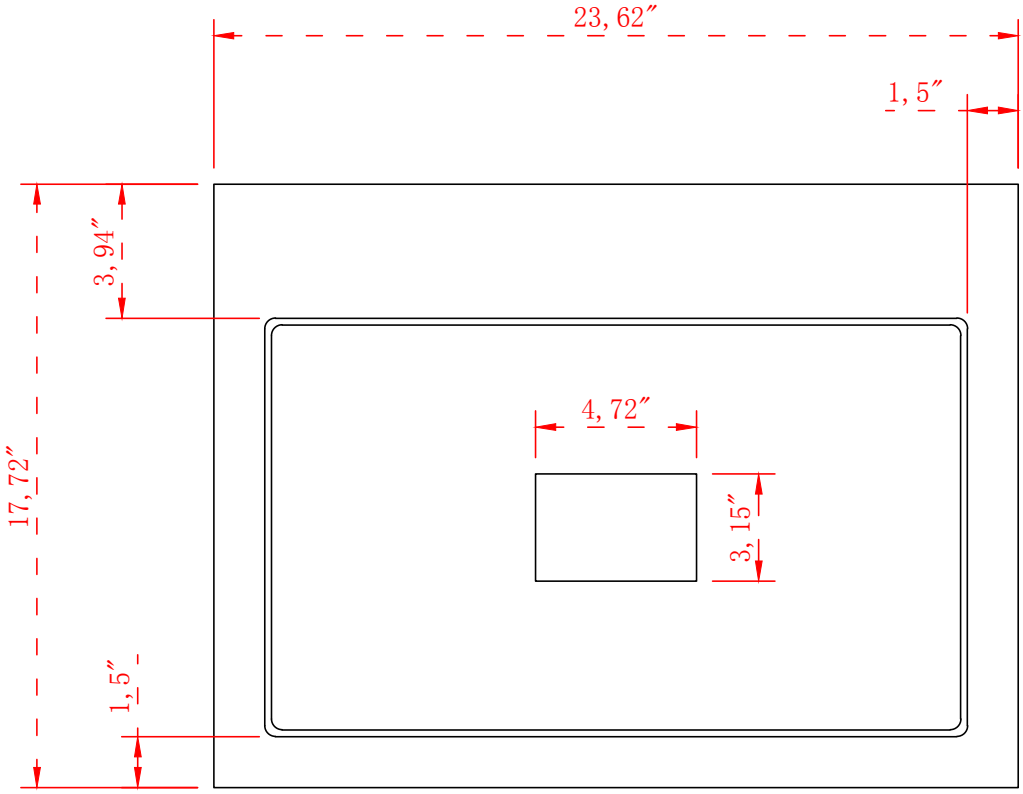
23, 62″
1, 5″
3, 94″
17, 72″
4, 72″
3, 15″
1, 5″

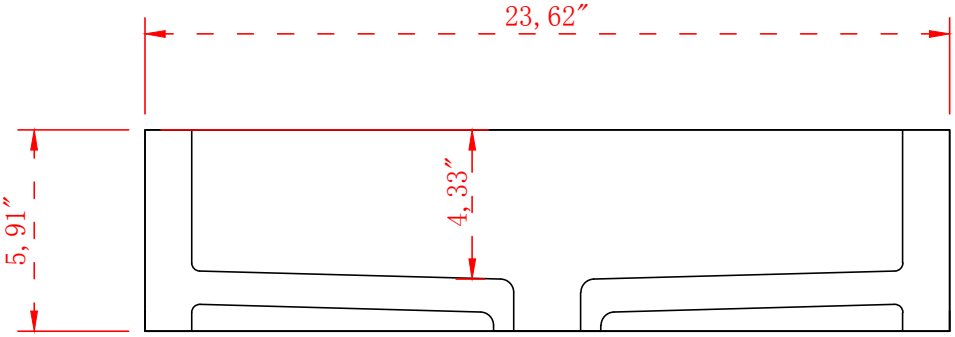
23, 62″
5, 91″
4, 33″