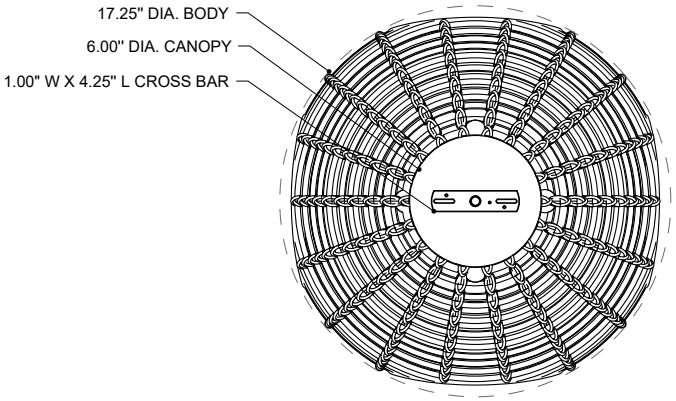

TOP VIEW

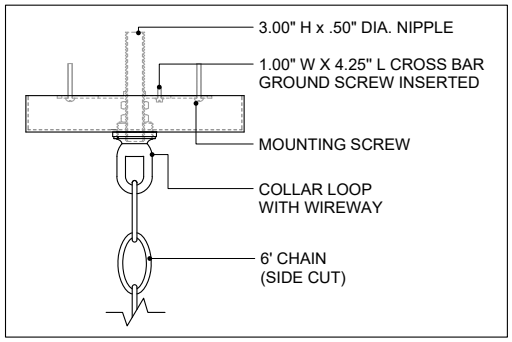

CANOPY DETAIL

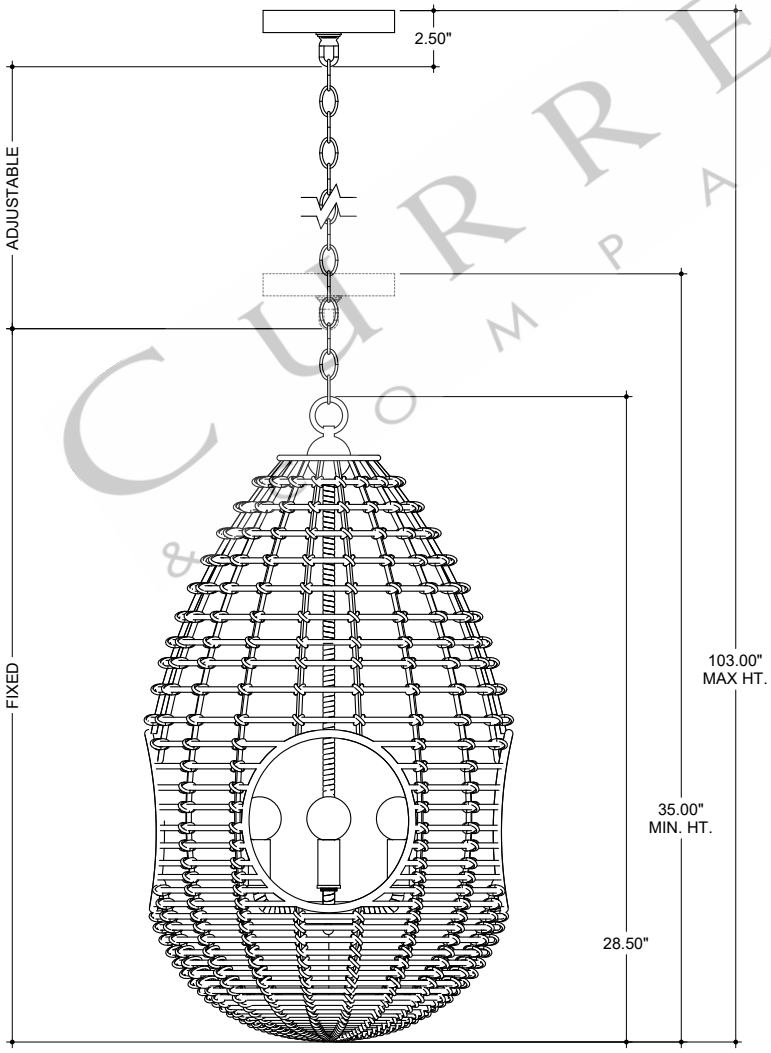

FRONT VIEW

CURREY & COMPANY

9000-1151

ALL WORK © 2023 CURREY & COMPANY