NO.					
1					
2					

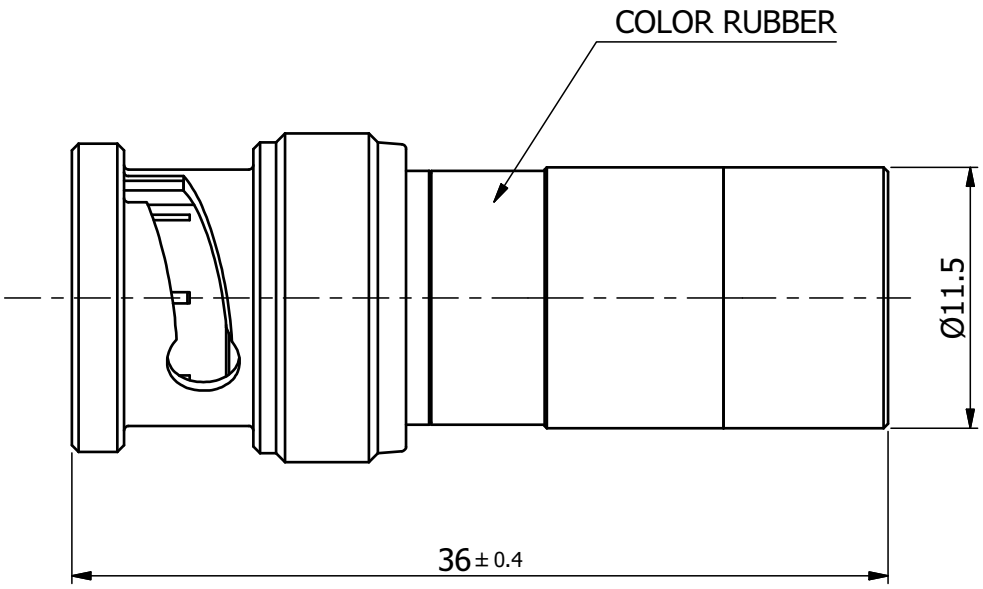

MATERIAL SPECIFICATIONS:

Bodies: Brass , Nickel Plated
Pin: PHOS.BRNZ , Gold Plated
Insulators: HD.PE & POM
Nut: Zinc , Nickel Plated
Spring: PHOS.BRNZ , Sn Plated
Washer: SUS304
Oring: SILICON & EPDM
RUBBER: SILICON

UNSPECIFIED TOLERANCES:±0.1mm

Cable: RG-59

			PART NAME	K3901		