AE8400,1,5,7,8RX
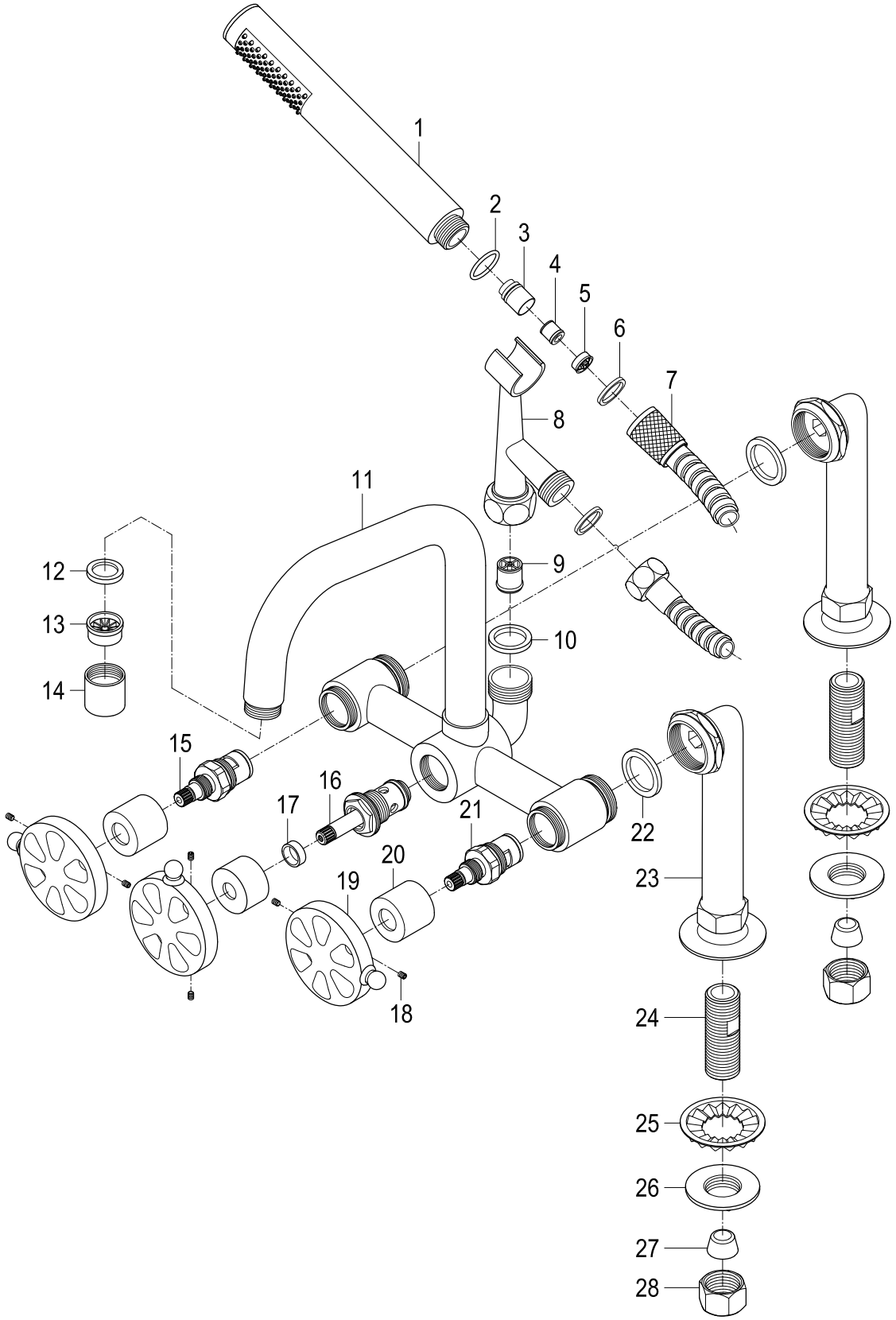
Deck Mount Tub Filler with Head Shower