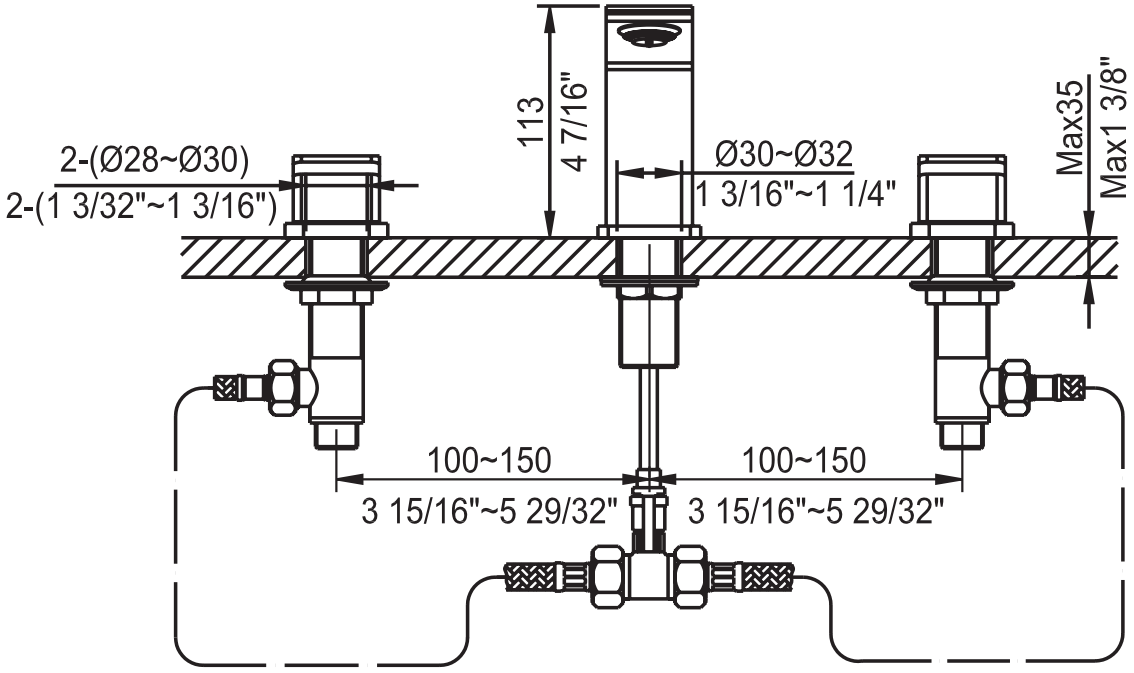
2-(Ø28~Ø30)
2-(1 3/32"~1 3/16")
113
4 7/16"
Ø30~Ø32
1 3/16"~1 1/4"
Max35
Max1 3/8"
100~150
3 15/16"~5 29/32"
100~150
3 15/16"~5 29/32"

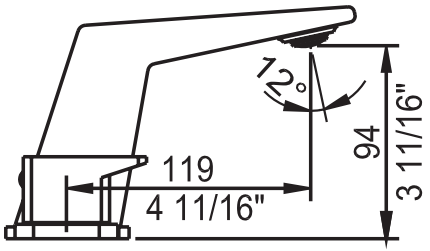
12°
119
4 11/16"
94
3 11/16"