KINGSTON

TO ORDER PARTS, CALL: 1-877-252-7277
www.kingstonbrass.com

VTSQ593223

59" Acrylic Freestanding Tub with Drain

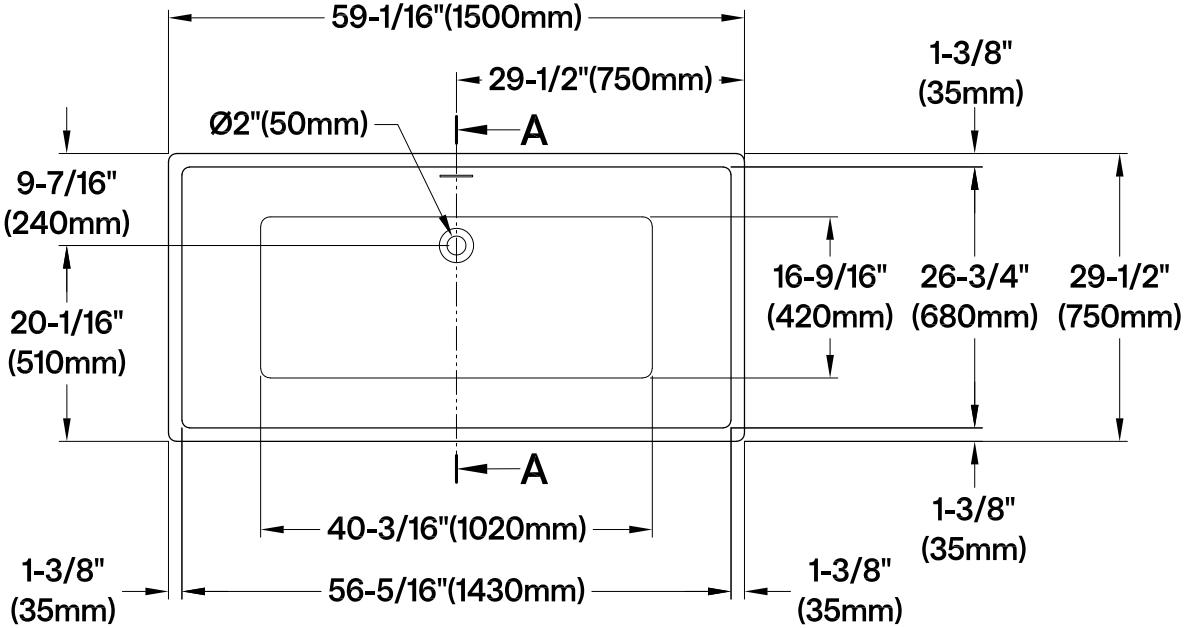

Drain Hole Size

Scale (3:1)

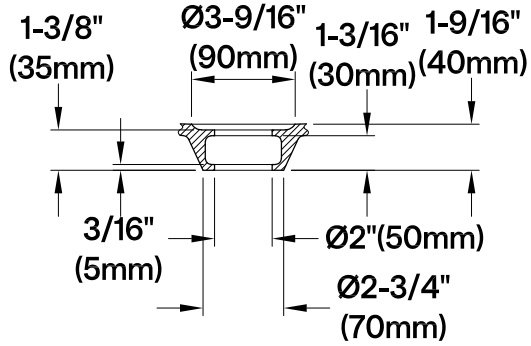

View B

Scale (5:1)

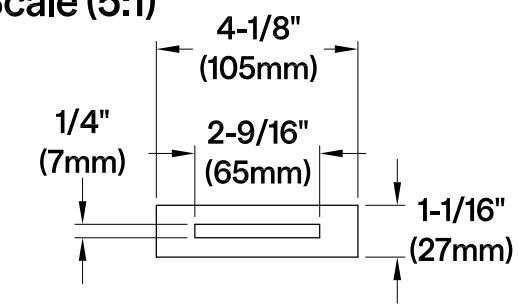

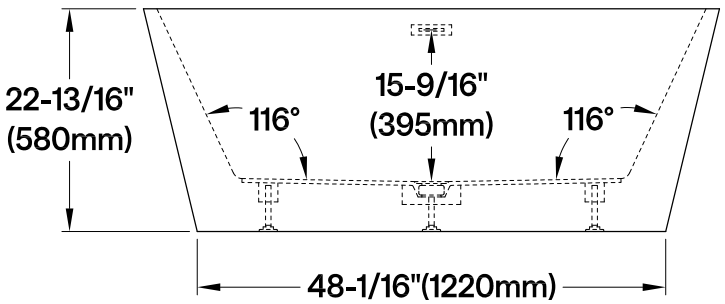

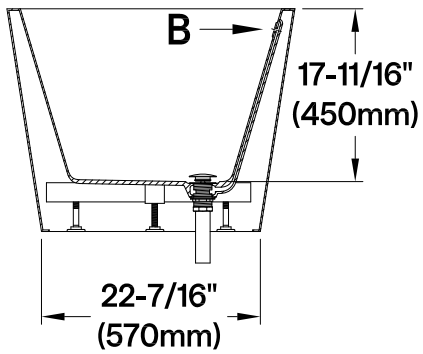

Section A-A

M14 x 120 (4 pcs)
M14 x 100 (1 pc)

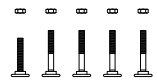

2025-10-B