K250A0,1,2,3,5,7,8CK
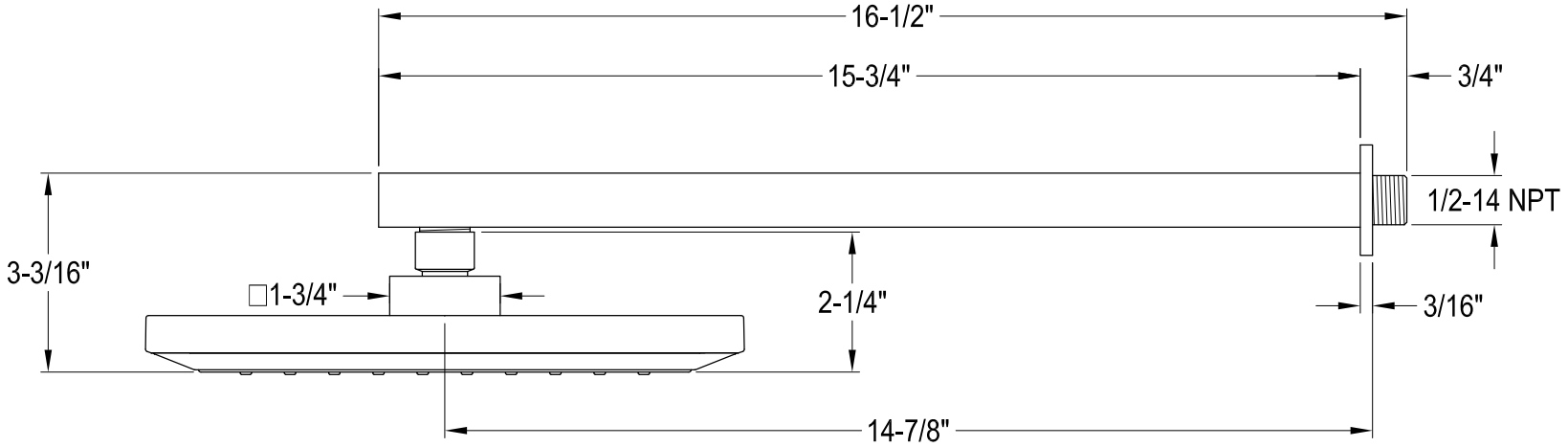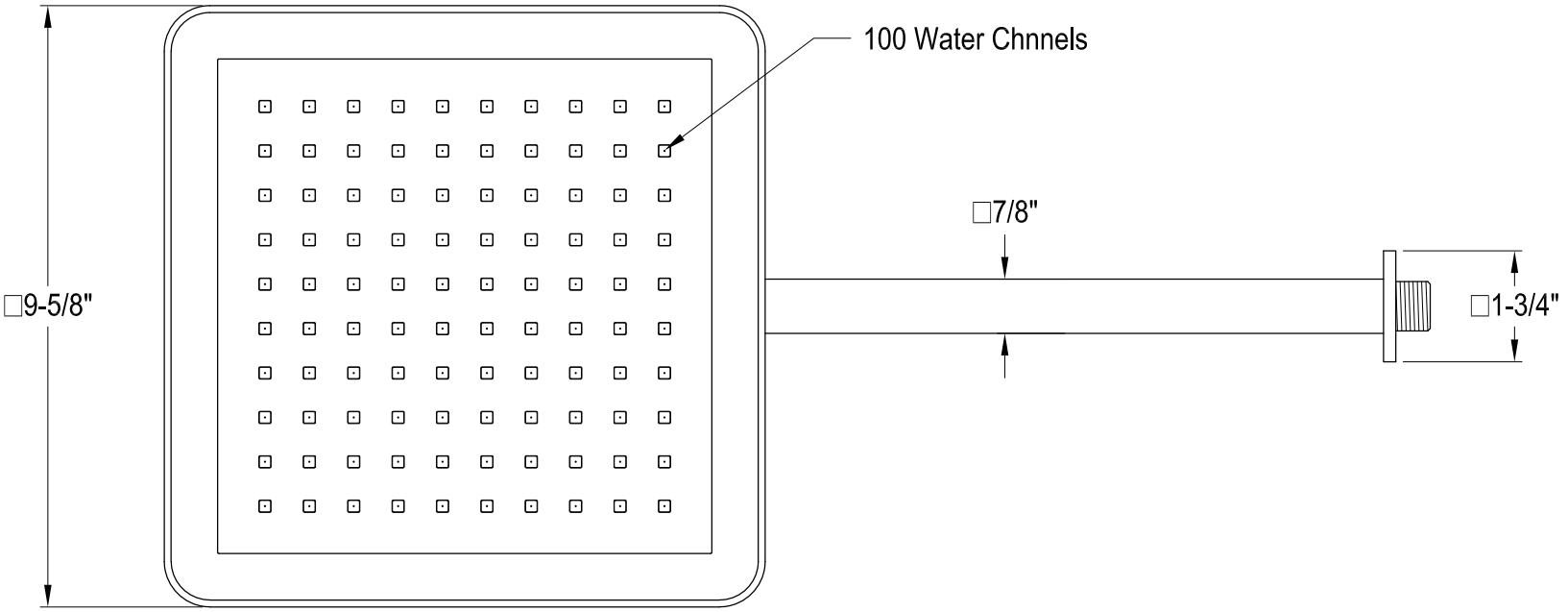
9-5/8" Square Showerhead with Shower Arm