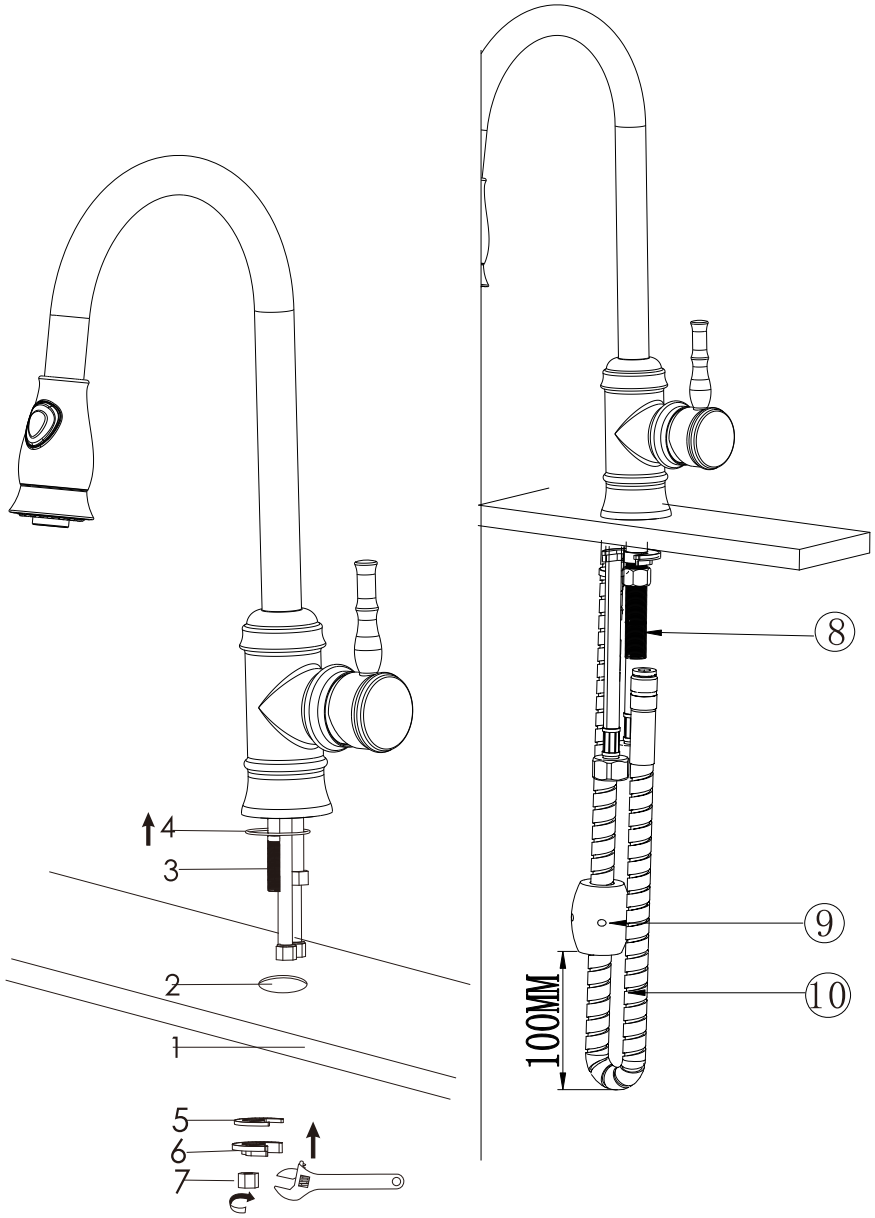

Kitchen Sink Faucet (Single Hole Pull Down) Installation

1. Drill a ø1.3" – ø1.38" hole, put the gasket (2) on the bottom of the faucet body.

2. Put the faucet body (10) through the hole in the sink, then put on the rubber gasket (3) and metal gasket (4) in order, lock the nut (5), tight it with screw (7).

3. Install the weight balance (8) at suitable position, allow approximately 100mm of spacing between the weight and where the hose curves. Then connect the other side of the sprayer with the outlet hose (6)

4. Connect the inlet hoses with the supply tube, left (red) to hot water, right (blue) to cold.

9	shower hose
8	weight balance
7	screw
6	outlet hose
5	locking nut
4	metal gasket
3	rubber gasket
2	gasket
1	faucet body
S/N	NAME

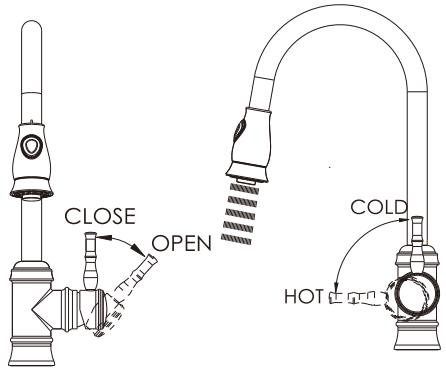

How to Use

1. Turn on the water supply valve, to check every joint if there is any leakage.

2. Pull the handle away from the faucet to start the water flow and push the handle towards the faucet to cut off the water flow.

3. Pull the handle towards yourself for hot water and away from yourself for cold water.