ASSEMBLY GUIDE
GUIDE D'ASSEMBLAGE
INSTRUCCIONES DE ENSAMBLAJE

FLASHWorkplace

72 x 36 Bow Front Desk
Bureau à devant arqué 72L x 36P
Escritorio curvo 72An x 36Pr

196861152115
196861152122

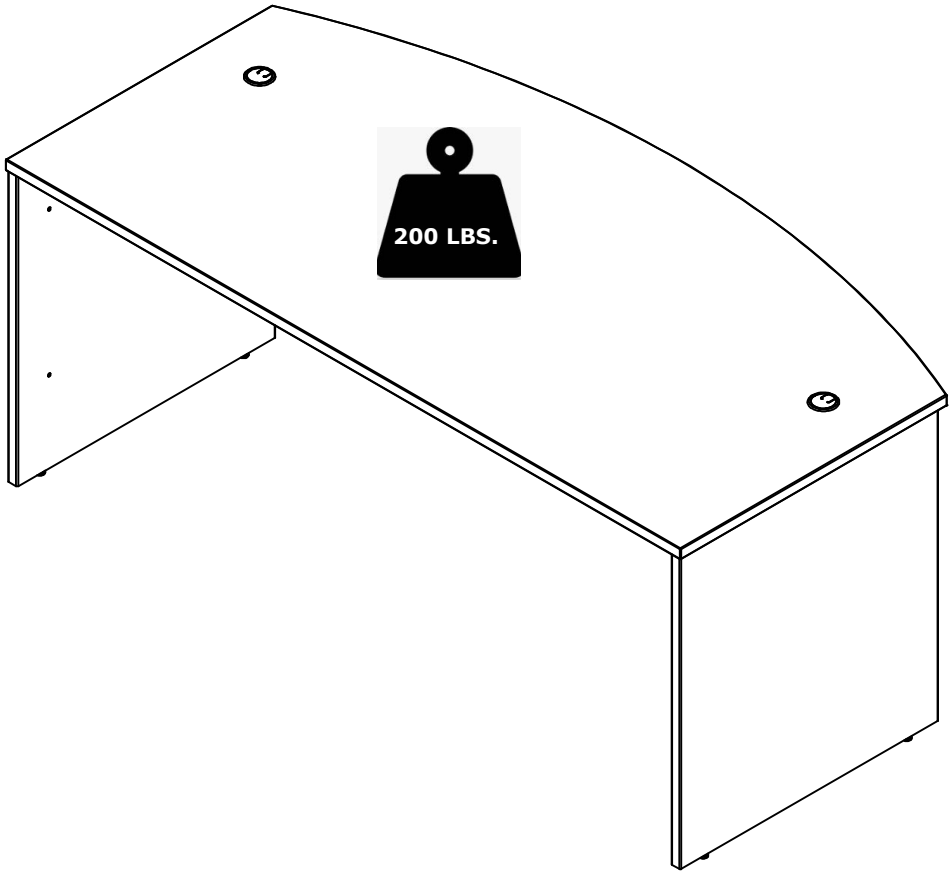

⚠ **NOTE:**
If there are parts missing from your order or if your product was damaged during shipping, PLEASE CONTACT US DIRECTLY.

⚠ **NOTE :**
S'il vous manque des pièces ou si votre meuble a été endommagé pendant le transport, VEUILLEZ NOUS CONTACTER DIRECTEMENT.

⚠ **NOTA:**
En caso de piezas faltantes o si su producto fue dañado durante el envío, POR FAVOR CONTÁCTENOS DIRECTAMENTE.

KEEP MANUAL FOR FUTURE REFERENCE. | CONSERVEZ LE MANUEL POUR RÉFÉRENCE FUTURE. | GUARDE EL MANUAL PARA REFERENCIA FUTURA.

Customer Service Email: CustomerExperience@theubiquegroup.com | Phone: 866-552-2810

Parts - Pièces - Piezas

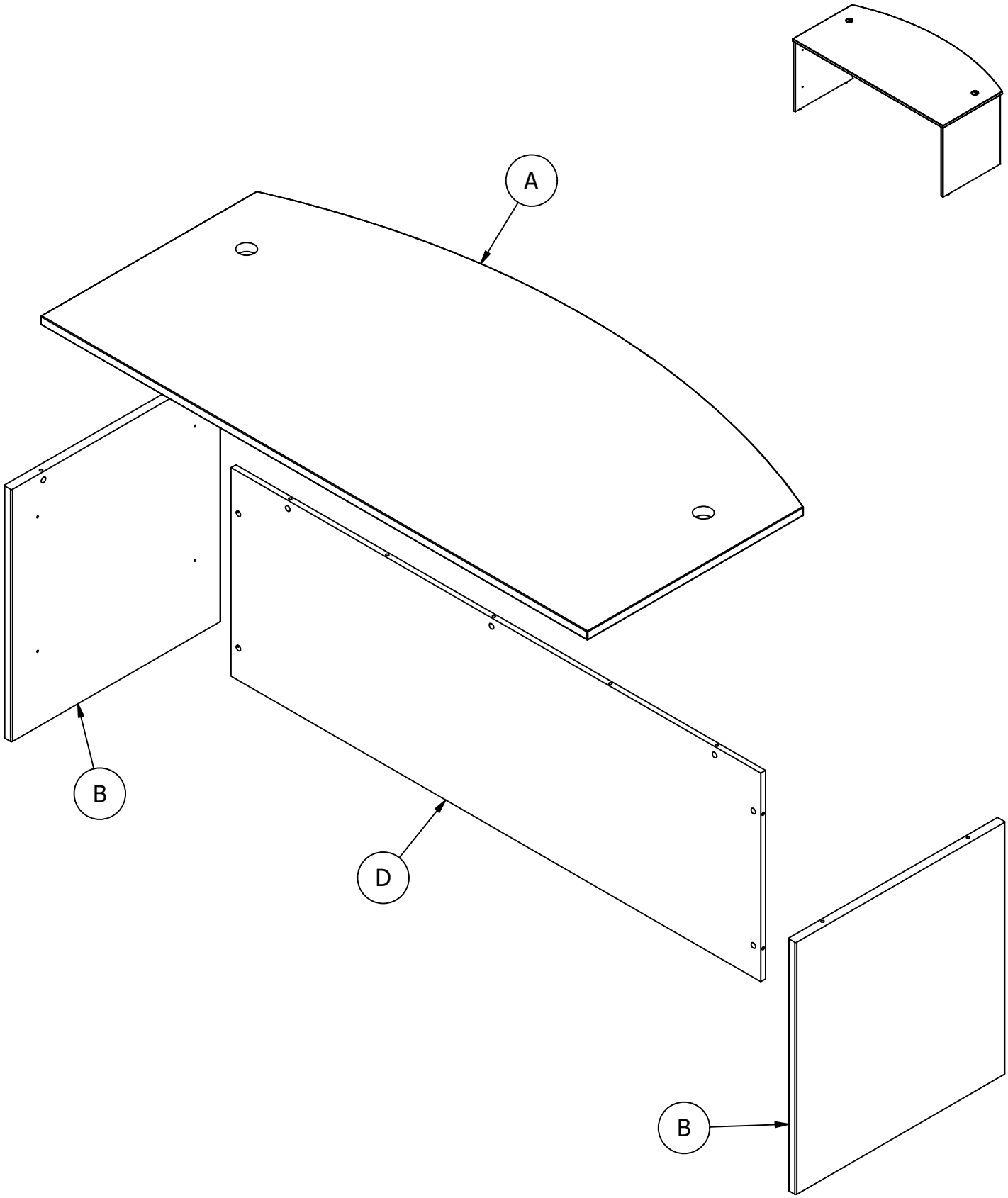

Fasteners - Fixations - Sujetadores

1

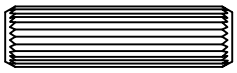

8 x 30

[2]

2

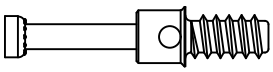

[11]

3

3000

[11]

Hardware - Quincaillerie - Quincaillas

4

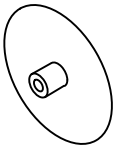

[11]

5

[4]

6

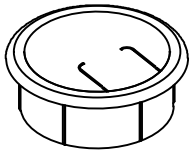

[2]

7

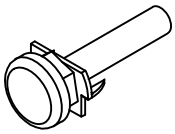

[4]

STEP-ÉTAPE-PASO
1

Prepare - Préparer - Preparar

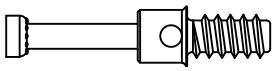
[4]

5mm
[4]

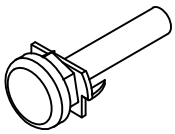
[4]

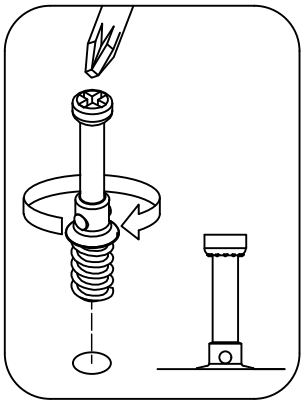

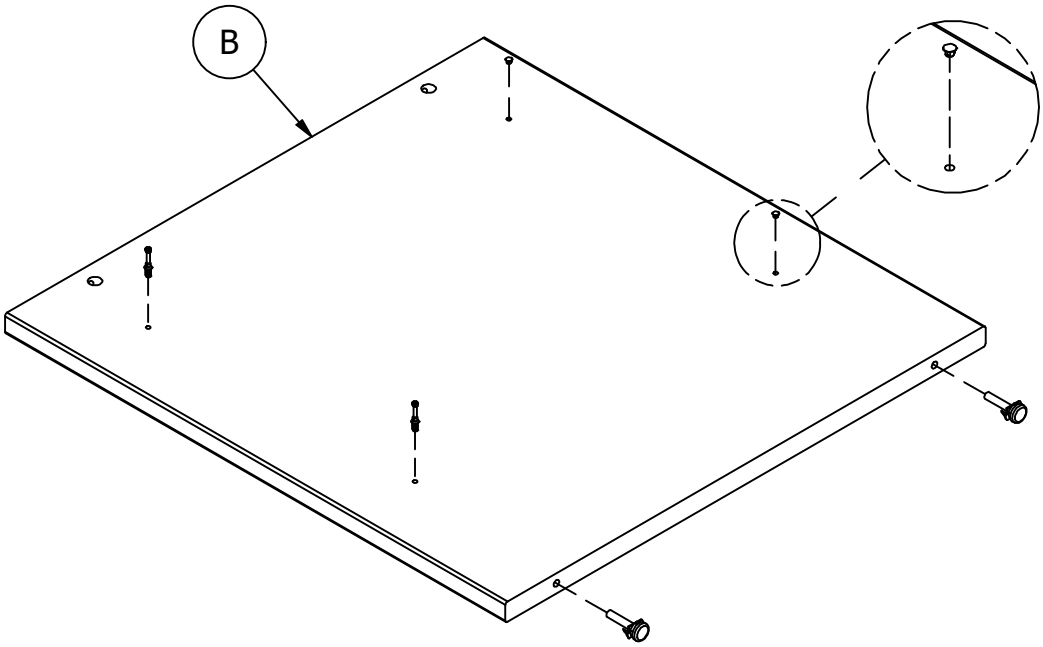

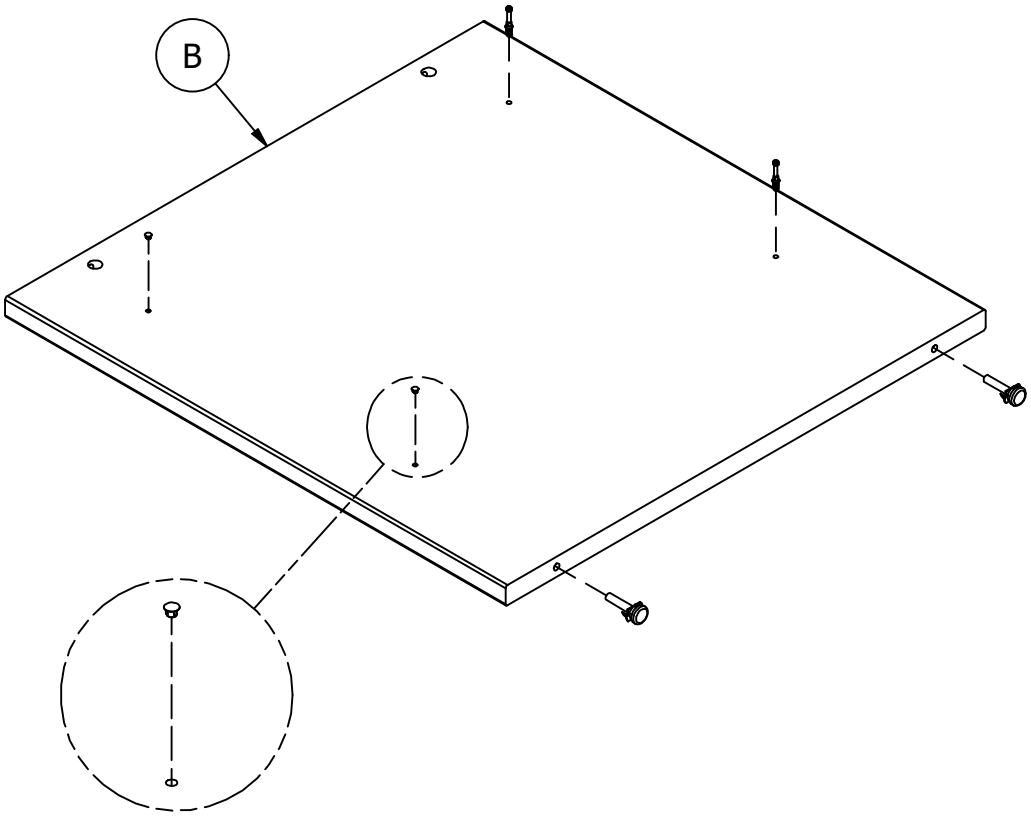

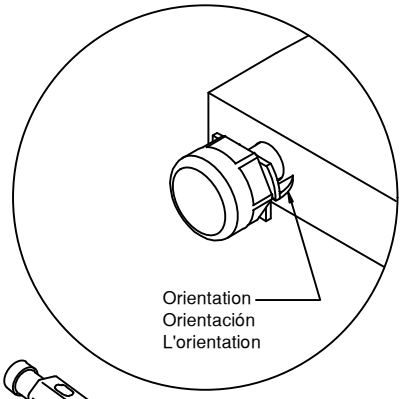

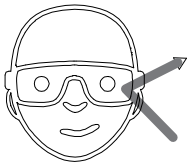

Safety glasses
Gafas de seguridad
Lunettes de protection

STEP-ÉTAPE-PASO
2

Assemble - Assembler - Assemblar

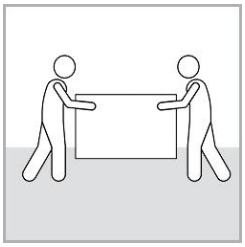

Team Lift
Esfuerzo de equipo
Effort d'équipe

3000

[4]

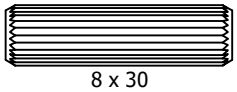

8 x 30

[2]

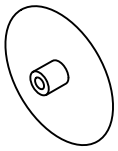

[4]

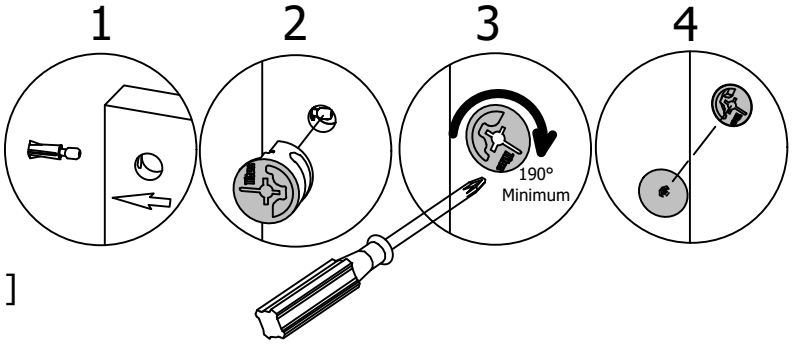

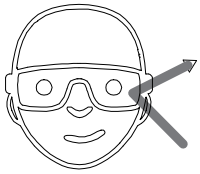

Safety glasses
Gafas de seguridad
Lunettes de protection

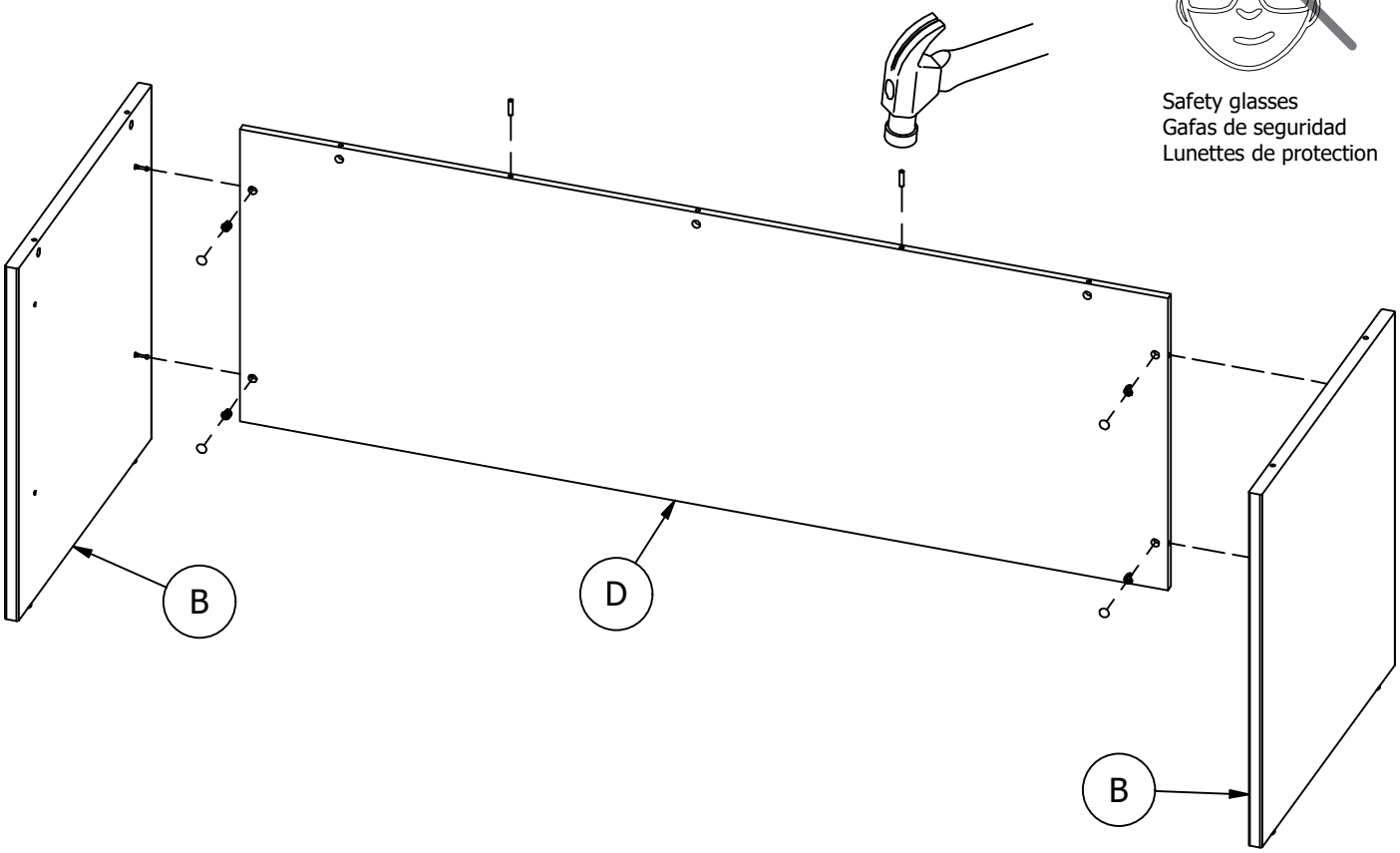

STEP-ÉTAPE-PASO

3

Prepare - Préparer - Preparar

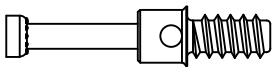

[7]

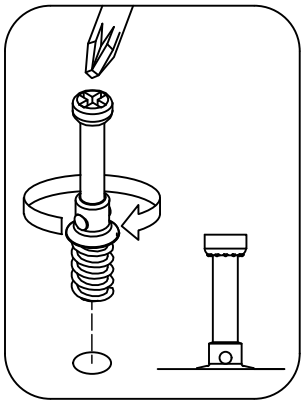

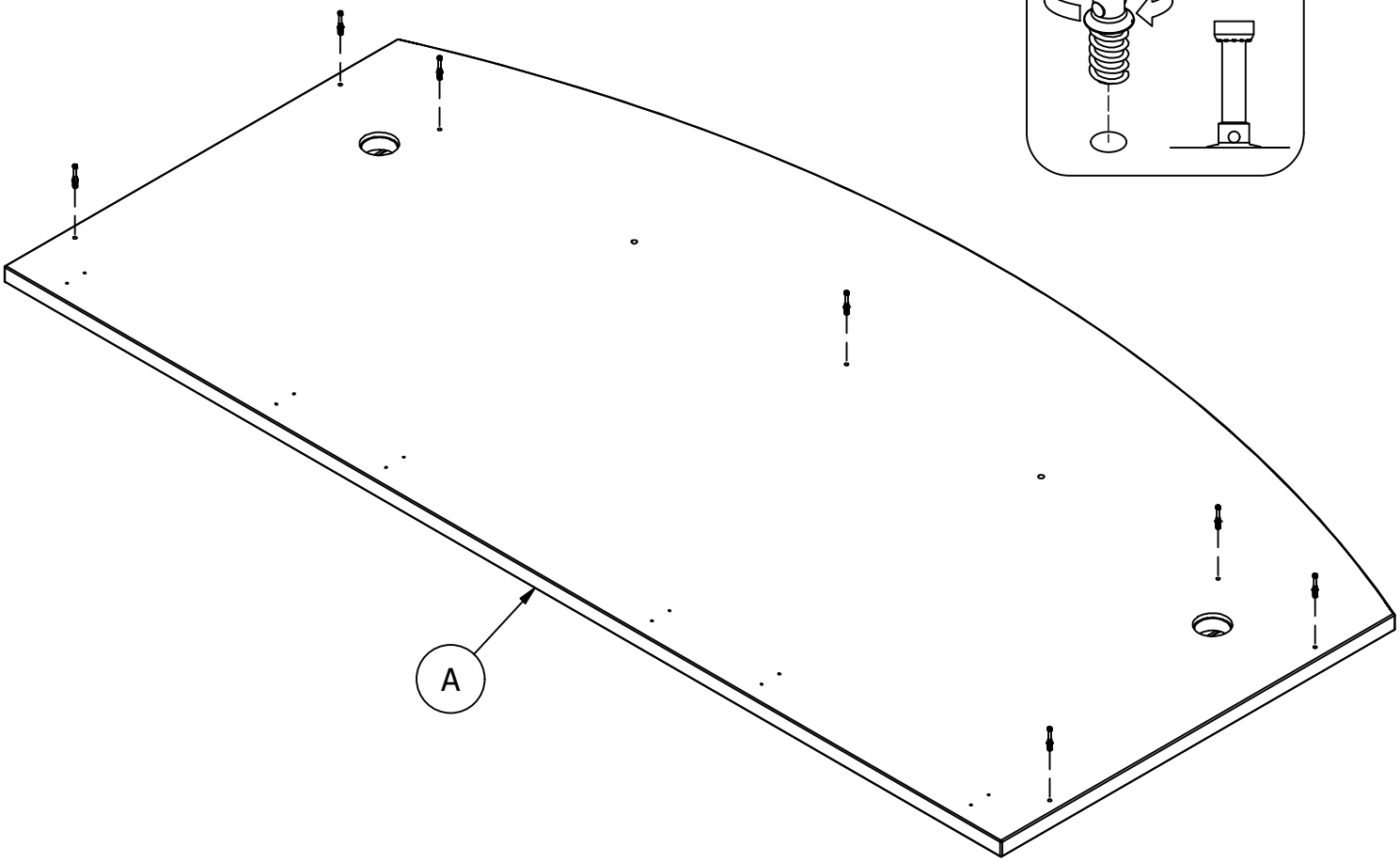

STEP-ÉTAPE-PASO
4

Assemble - Assembler - Assemblar

Team Lift
Esfuerzo de equipo
Effort d'équipe

3000

[7]

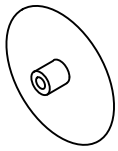

[7]

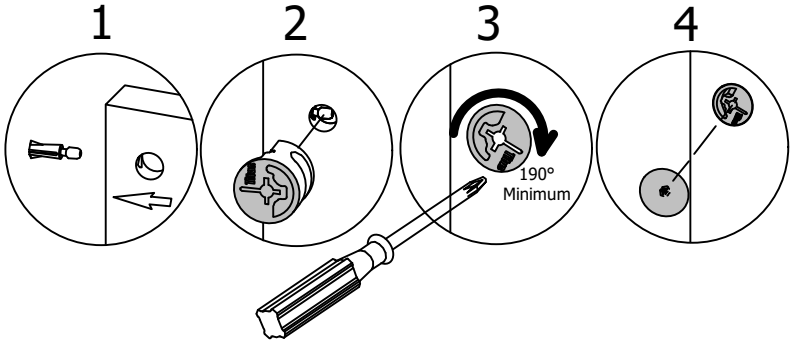

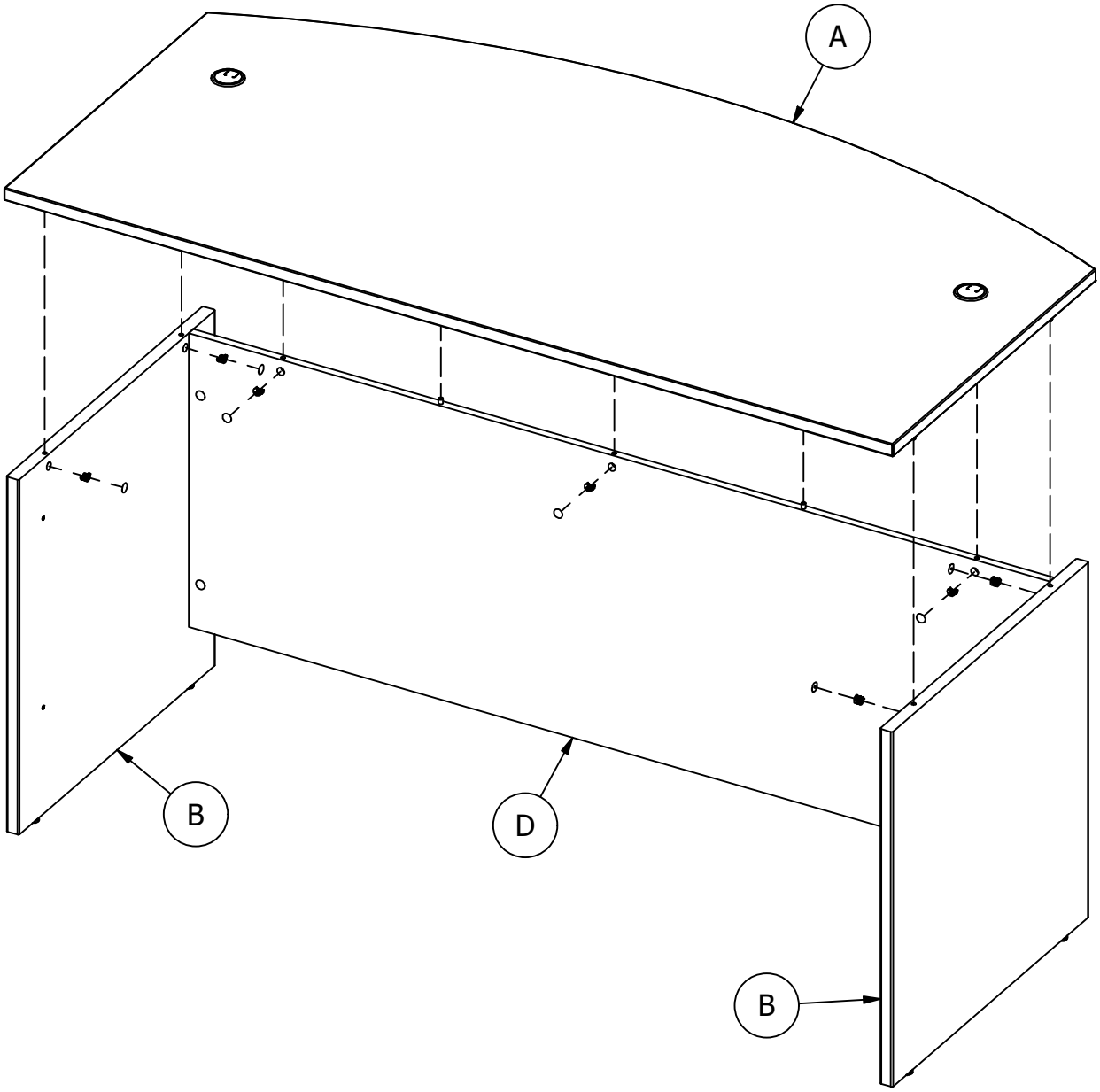

STEP-ÉTAPE-PASO
5

Load - Charge - Carga

Gently clean surfaces with a damp cloth.
Limpie suavemente las superficies con una esponja húmeda.
Nettoyer délicatement les surfaces à l'aide d'une éponge humide.

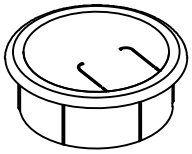

[2]

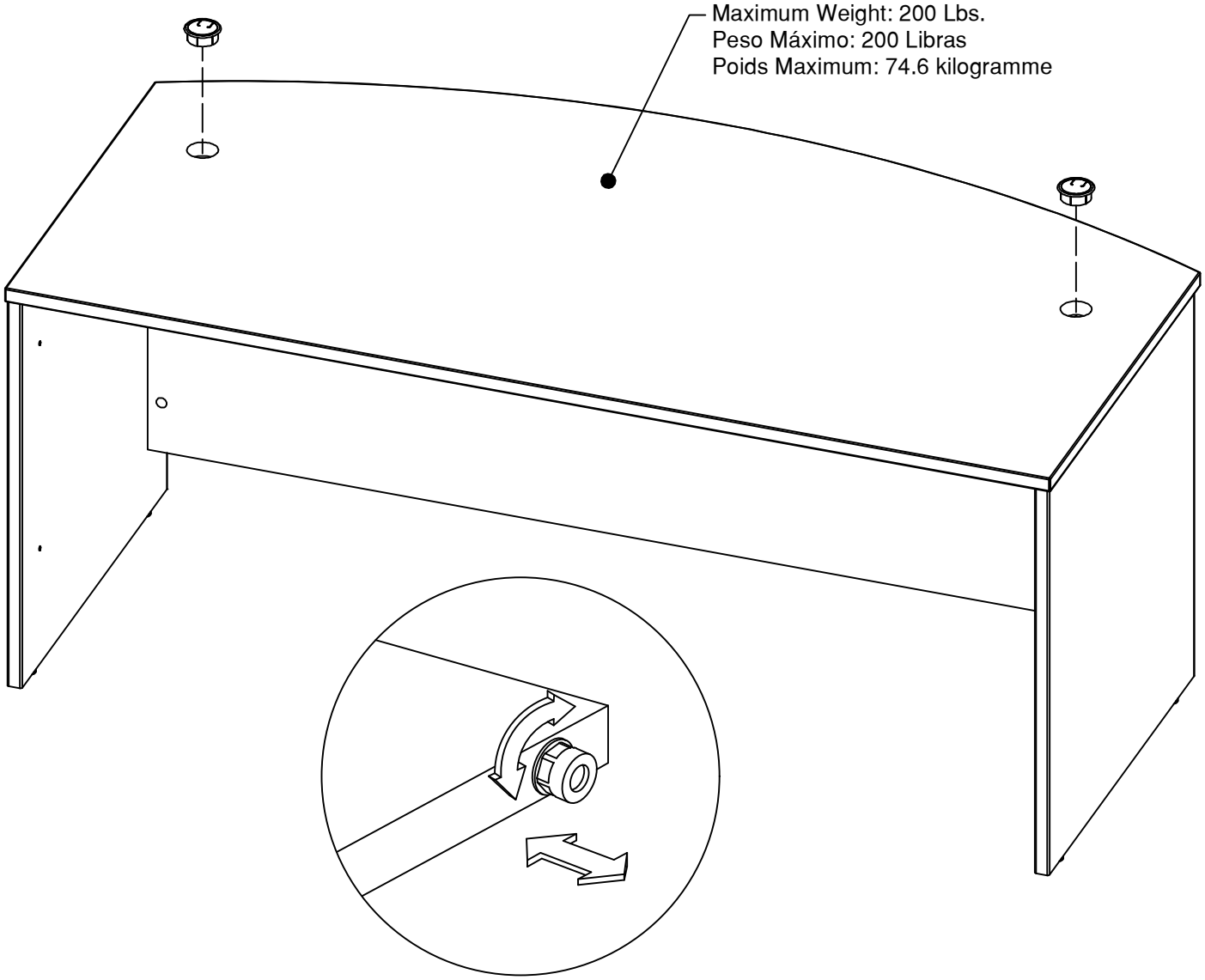

Quality and Safety Guidelines

These guidelines apply across the catalog — seating, tables and desks, storage and shelving, folding and stacking products, classroom and outdoor furniture, and other case goods. Please review this information in addition to the specific assembly instructions included with your product.

BEFORE YOU ASSEMBLE

- Unpack all parts and hardware and check them against the parts list before starting assembly.
- Read all instructions and warnings completely before beginning; assemble on a soft, protected surface.
- Use only the tools and hardware specified in the instructions; do not substitute sizes.
- Tighten all hardware securely but do not overtighten, and get a second person to help with large or heavy pieces.

GENERAL SAFETY & CARE

- Use this product only as intended by the manufacturer; this product is intended for indoor use unless labeled for outdoor/patio use.
- Follow all posted weight capacity limits and usage guidelines provided with the product.
- Do not use the product if any instability, damage, or unusual wear is detected; discontinue use immediately.
- Regularly inspect for loose hardware, worn components, cracks, or other signs of deterioration, and tighten hardware as needed; replace damaged or worn parts only with manufacturer-approved replacement parts.
- Keep children supervised around furniture and any moving components.
- Wipe down surfaces regularly with a soft, clean, lint-free cloth; for most materials, a cloth lightly dampened with mild soap and water is sufficient.
- Avoid harsh chemicals, bleach, ammonia-based cleaners, solvents, and abrasive scrubbers, which can damage finishes, fabric, and hardware.
- Blot spills promptly rather than rubbing, and dry surfaces thoroughly after cleaning; avoid saturating any material with water.
- Keep products out of direct, prolonged sunlight and away from heat sources to help prevent fading, warping, or cracking over time.

STORAGE, SHELVING & MOVING FURNITURE

- Remove contents before moving storage furniture, cabinets, dressers, desks, or shelving units.
- Use proper lifting technique and adequate assistance when moving heavy items; do not drag, push, or pull furniture unless it is designed for such movement.
- Follow all anti-tip and wall-anchoring instructions when provided, especially for tall or top-heavy pieces.
- Keep fingers, hands, and other body parts clear of hinges, drawer slides, lift mechanisms, and folding or adjustable features.

SEATING, FOLDING & ADJUSTABLE PRODUCTS

- Sit fully and properly within the seat area; keep chairs stationary when sitting down or standing up, and do not use seating as a ladder or step stool.
- Do not lean excessively backward, forward, or sideways, as this may result in tipping or loss of balance.
- For rocking, reclining, swivel, or height-adjustable products, use only smooth, controlled movements and avoid excessive force.
- For folding and stacking chairs and tables, confirm legs and locking mechanisms are fully extended and secured before each use, and do not exceed recommended stack height limits.

Warranty & Product Support

For maintenance instructions, replacement parts, warranty information, or product support, please contact **Customer Experience** — Email: customerexperience@theubiquegroup.com | Phone: 866-552-2810.

Additional product information and warranty details can be found at www.theubiquegroup.com.

ASSEMBLY GUIDE
GUIDE D'ASSEMBLAGE
INSTRUCCIONES DE ENSAMBLAJE

FLASHWorkplace

42" Bridge / Return
Retour/pont 42L
Retorno/Puente 42An

196861148095
196861148101

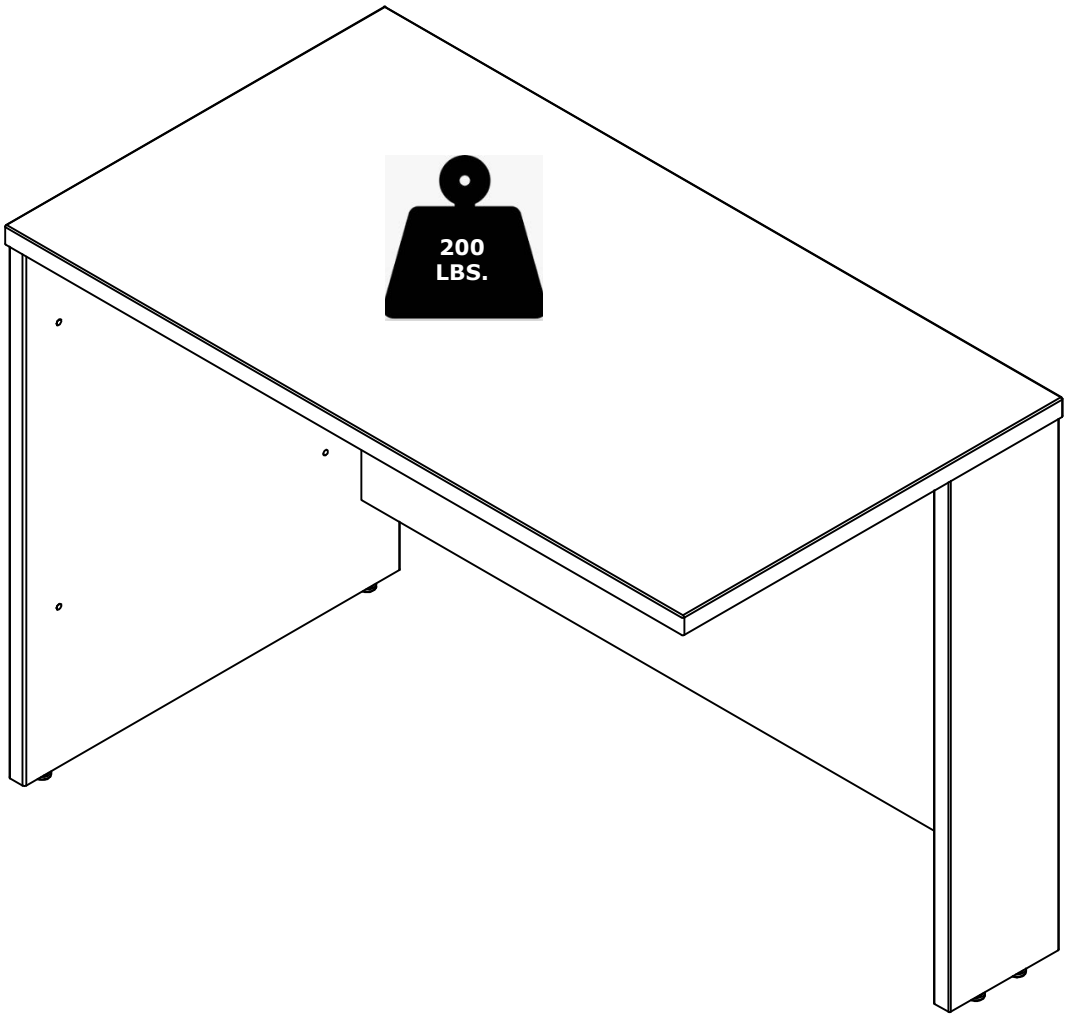

⚠ **NOTE:**
If there are parts missing from your order or if your product was damaged during shipping, PLEASE CONTACT US DIRECTLY.

⚠ **NOTE :**
S'il vous manque des pièces ou si votre meuble a été endommagé pendant le transport, VEUILLEZ NOUS CONTACTER DIRECTEMENT.

⚠ **NOTA:**
En caso de piezas faltantes o si su producto fue dañado durante el envío, POR FAVOR CONTÁCTENOS DIRECTAMENTE.

KEEP MANUAL FOR FUTURE REFERENCE. | CONSERVEZ LE MANUEL POUR RÉFÉRENCE FUTURE. | GUARDE EL MANUAL PARA REFERENCIA FUTURA.

Customer Service Email: CustomerExperience@theubiquegroup.com | Phone: 866-552-2810

Parts - Pièces - Piezas

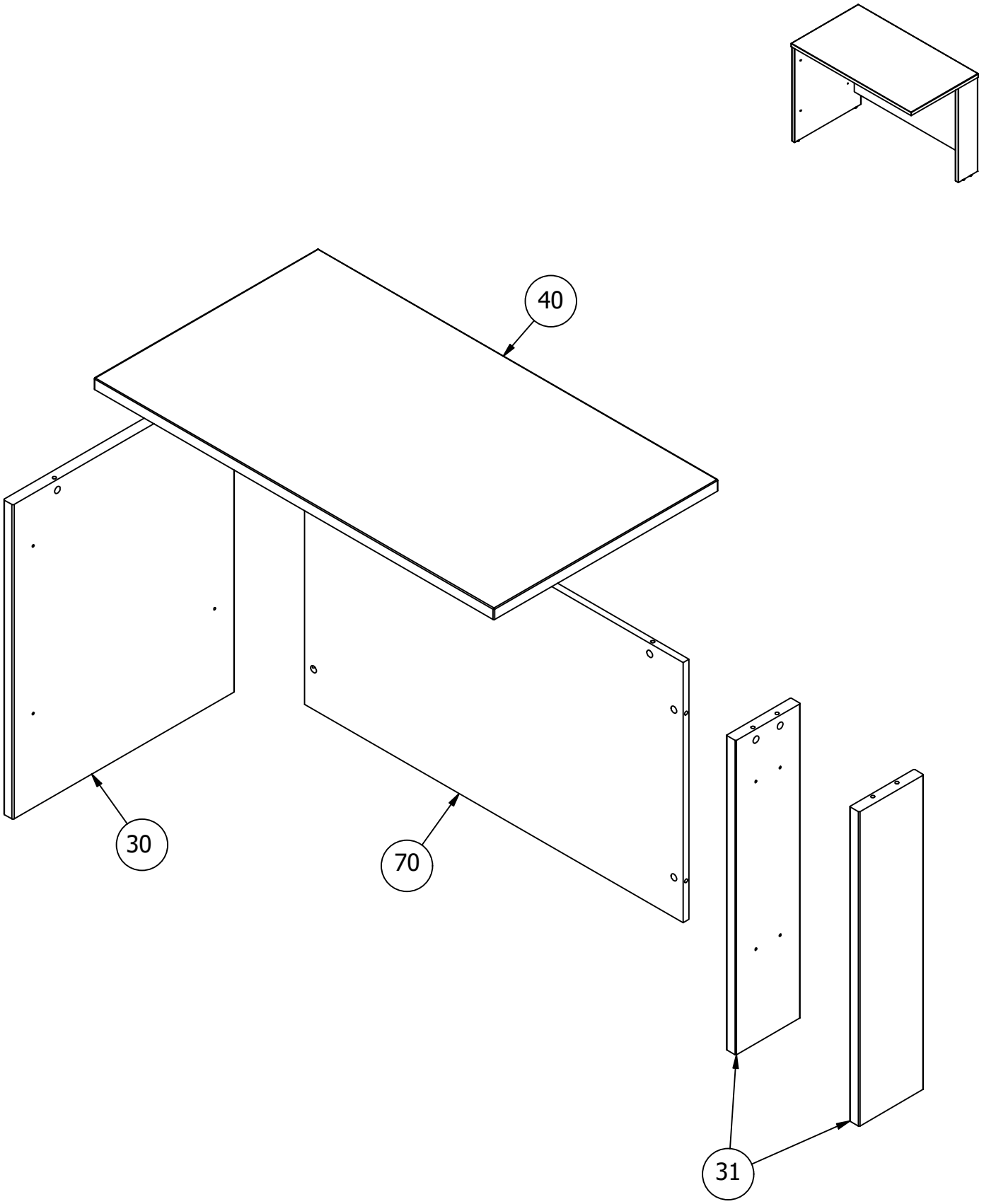

Fasteners - Fixations - Sujetadores

1

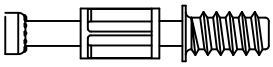

[9]

2

[9]

3

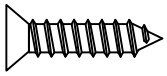

#10 x 3/4"

[6]

4

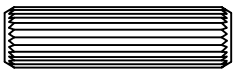

8 x 30

[1]

Hardware - Quincaillerie - Quincaillas

5

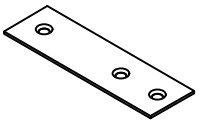

[2]

6

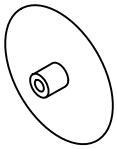

[9]

7

5mm

[4]

8

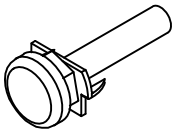

[4]

STEP-ÉTAPE-PASO
1

Option - Opción - Option

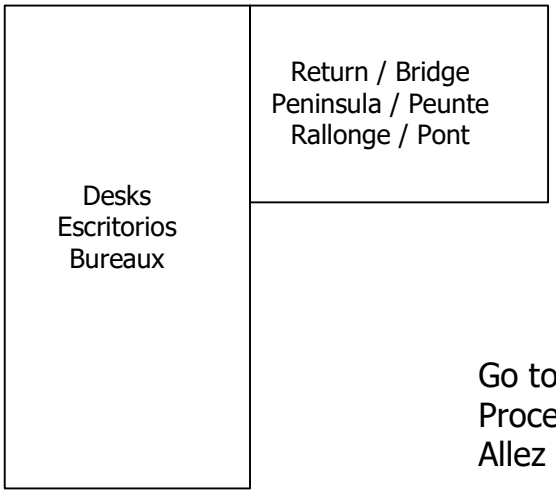

Go to Step 2.
Proceda al paso 2.
Allez à l'étape 2.

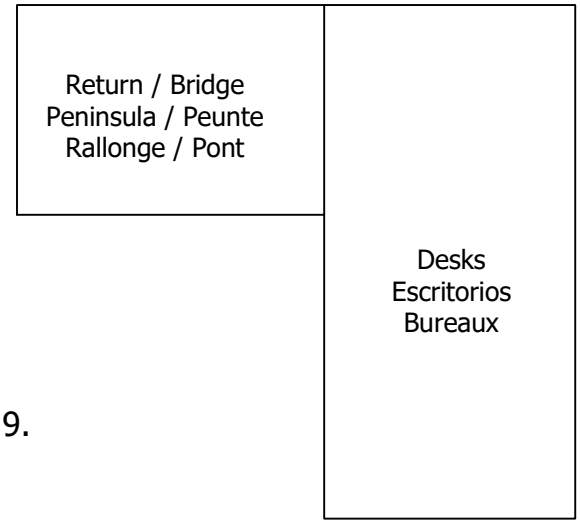

Go to Step 9.
Proceda al paso 9.
Allez à l'étape 9.

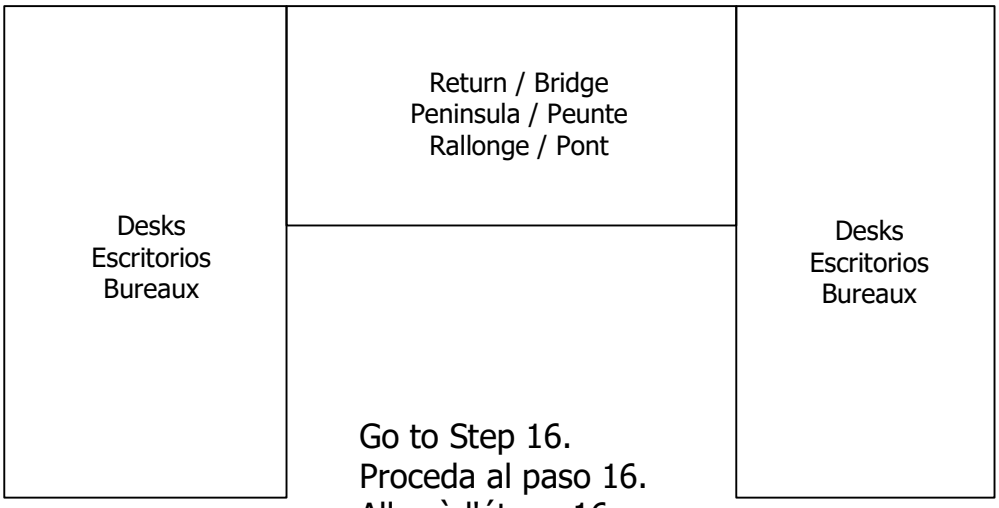

Go to Step 16.
Proceda al paso 16.
Allez à l'étape 16.

STEP-ÉTAPE-PASO
2

Prepare - Préparer - Preparar

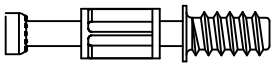
[2]

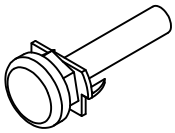
[2]

5mm

[2]

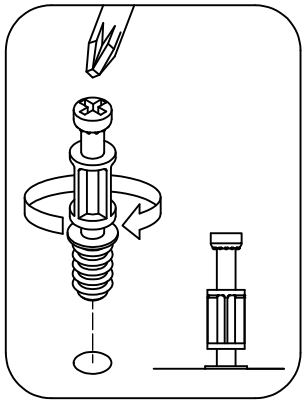

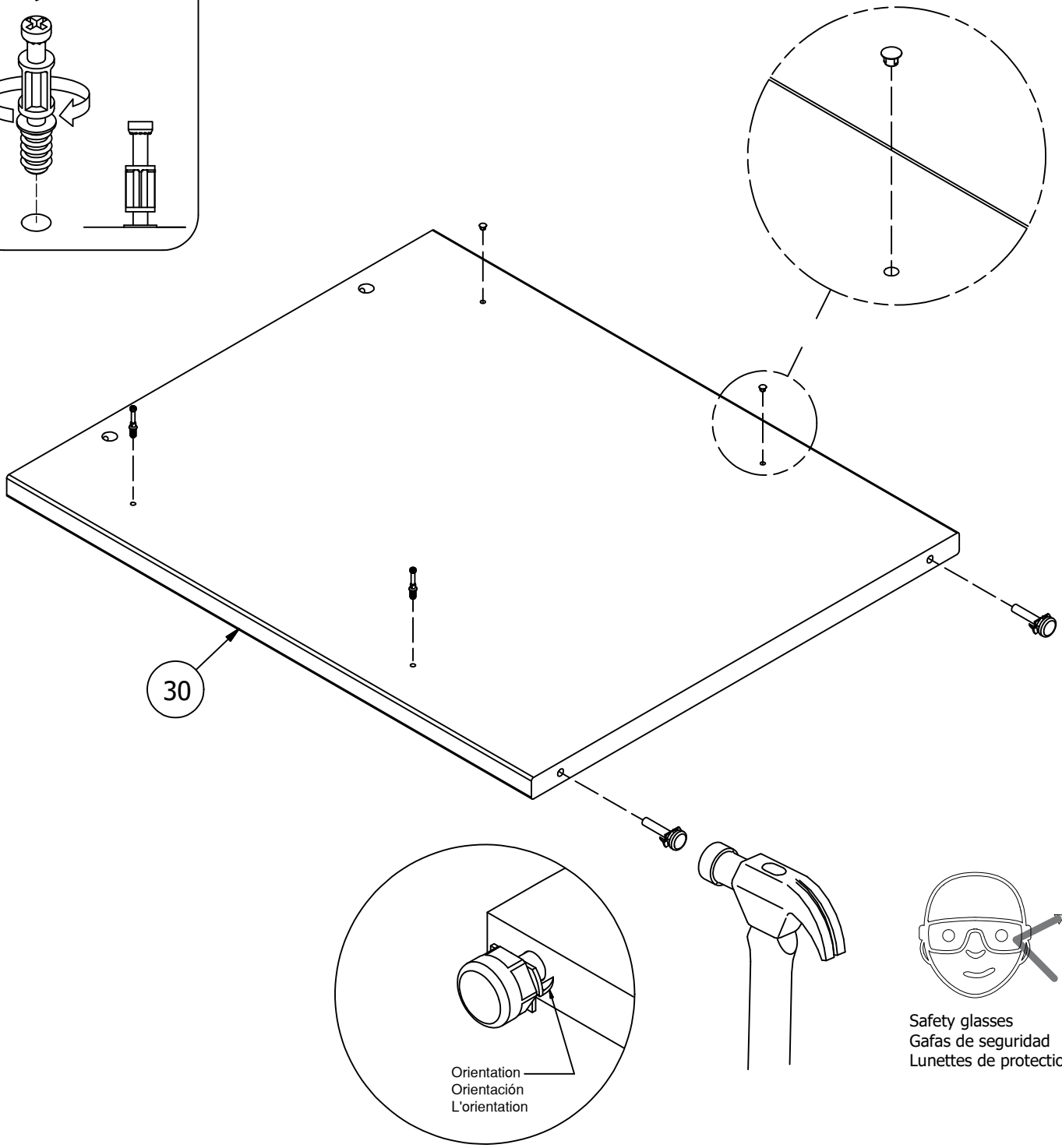

STEP-ÉTAPE-PASO
3

Prepare - Préparer - Preparar

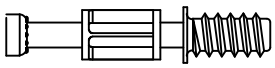
[2]

5mm
[2]

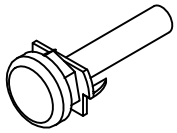
[2]

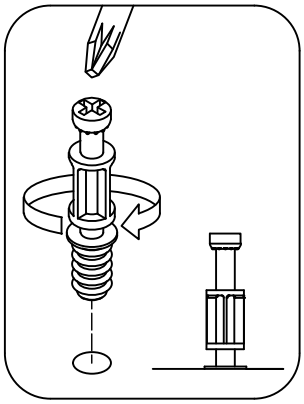

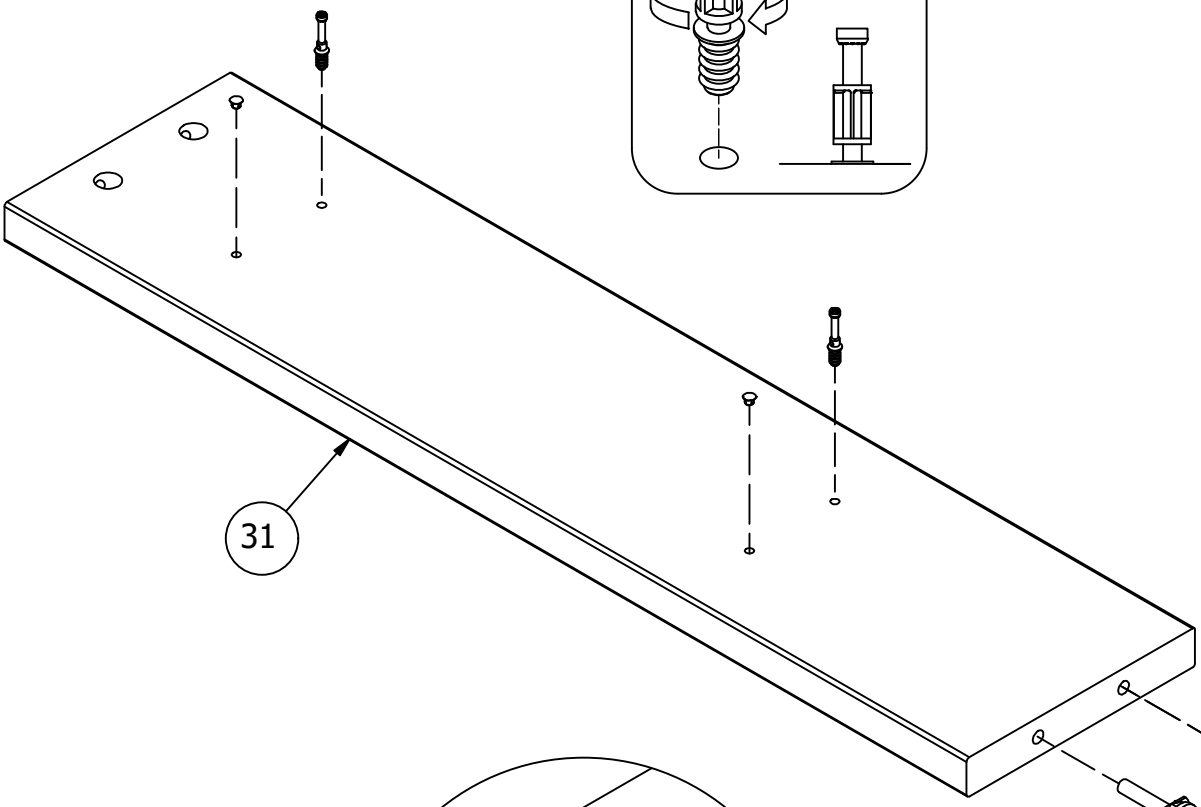

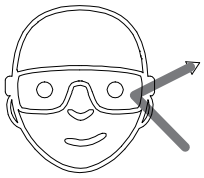
Safety glasses
Gafas de seguridad
Lunettes de protection

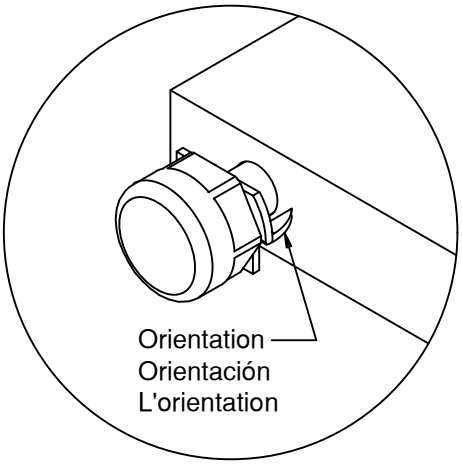

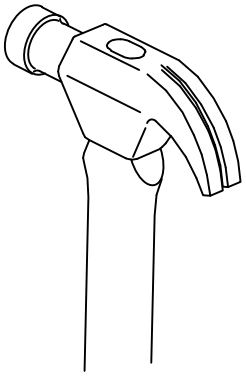

STEP-ÉTAPE-PASO
4

Assemble - Assembler - Assemblar

Team Lift
Esfuerzo de equipo
Effort d'équipe

[4]

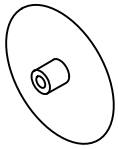

[4]

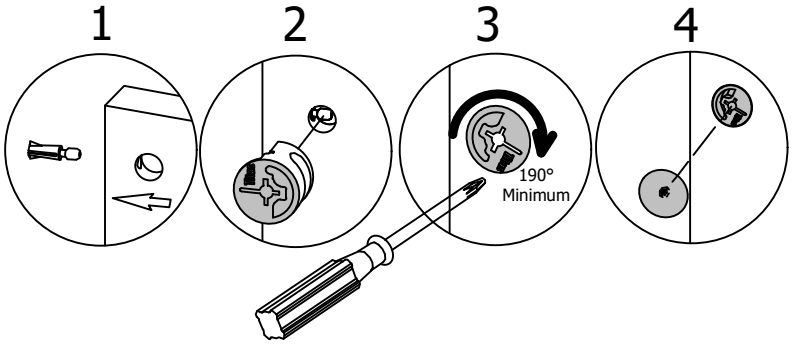

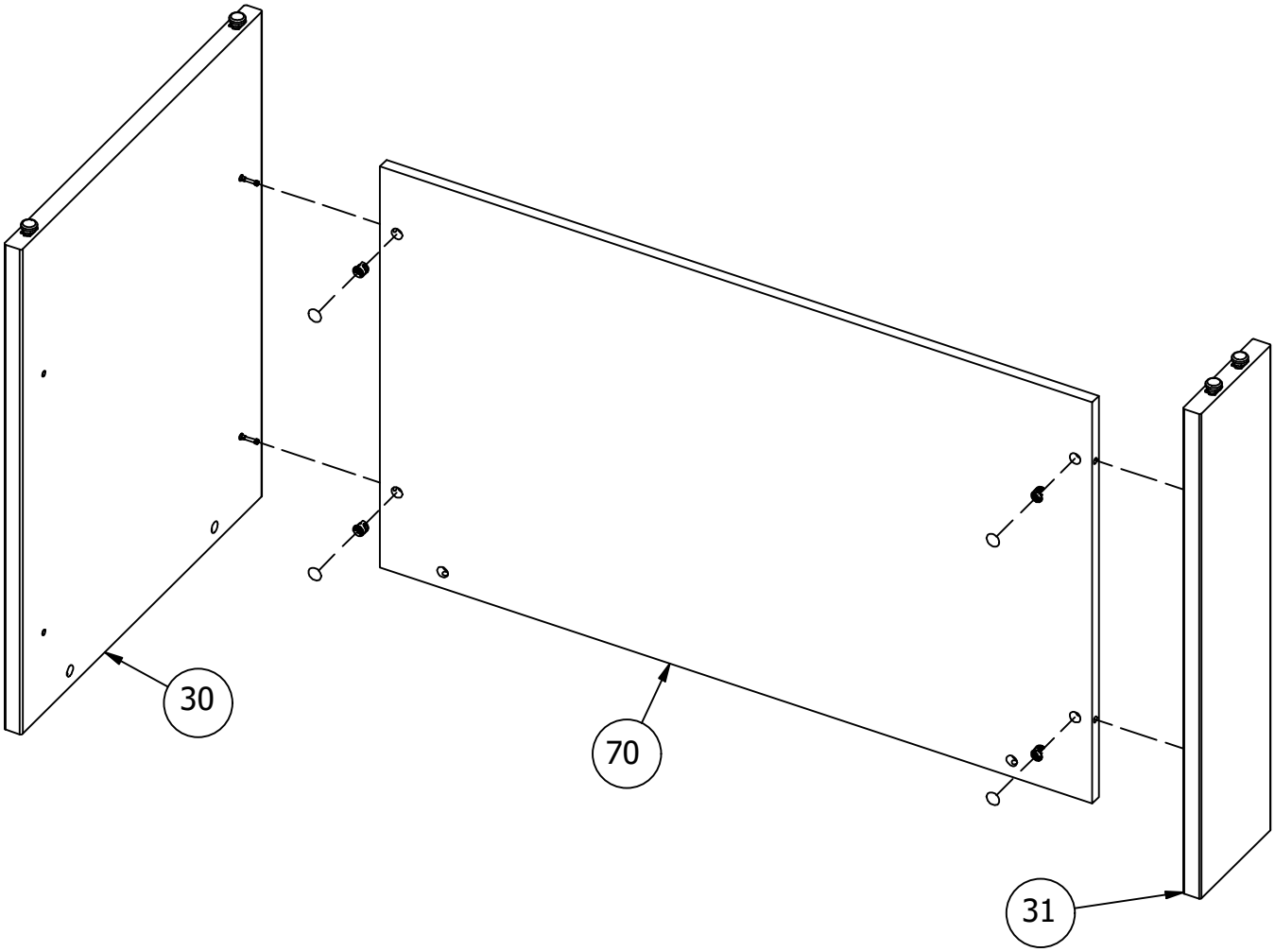

STEP-ÉTAPE-PASO

5

Prepare - Préparer - Preparar

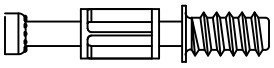

[5]

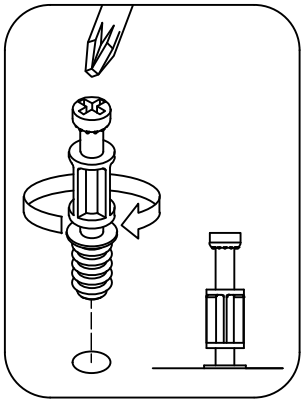

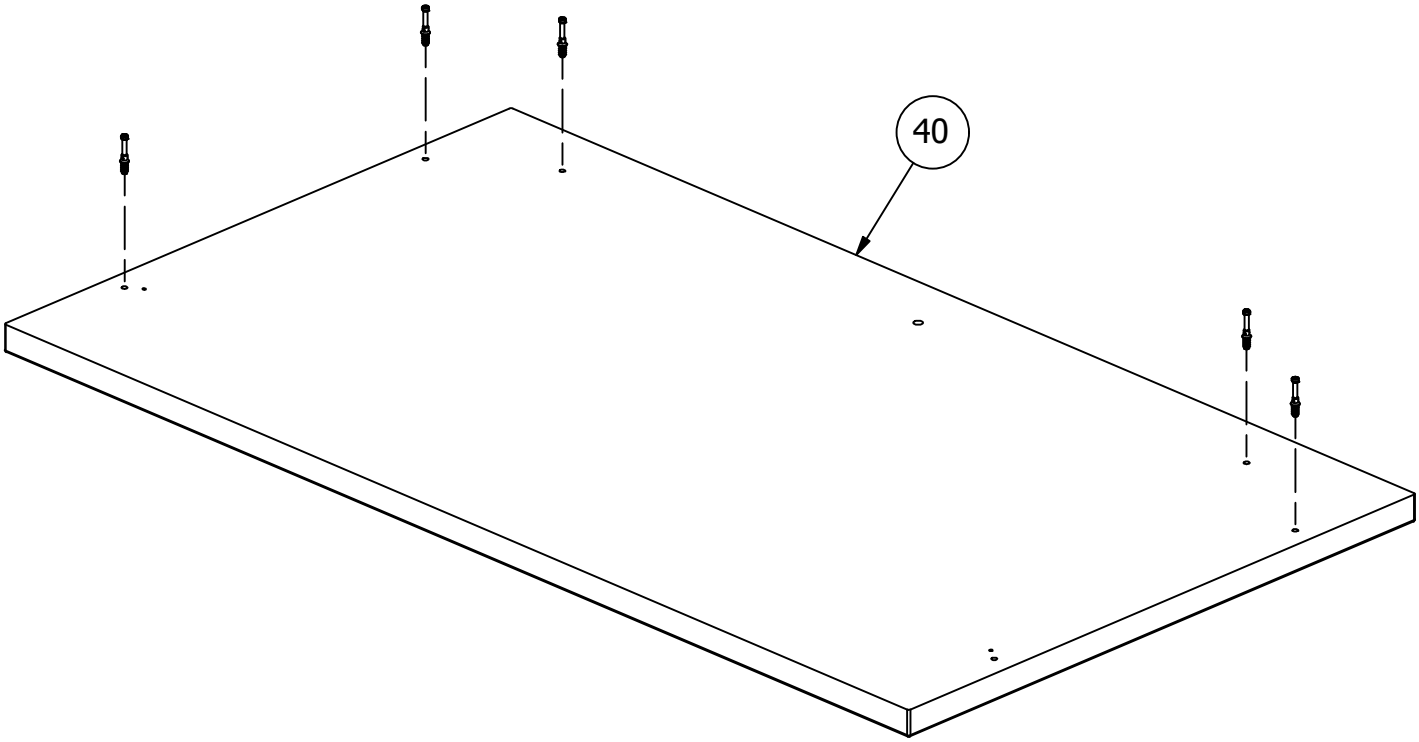

STEP-ÉTAPE-PASO
6

Assemble - Assembler - Assemblar

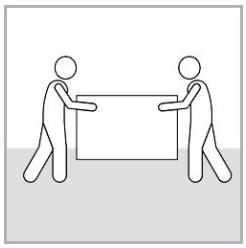

Team Lift
Esfuerzo de equipo
Effort d'équipe

[5]

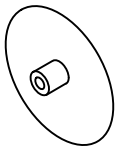

[5]

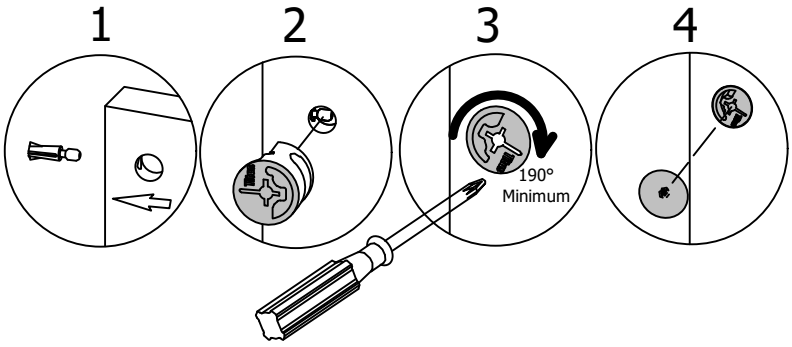

[1]

8 x 30

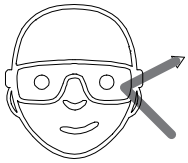

Safety glasses
Gafas de seguridad
Lunettes de protection

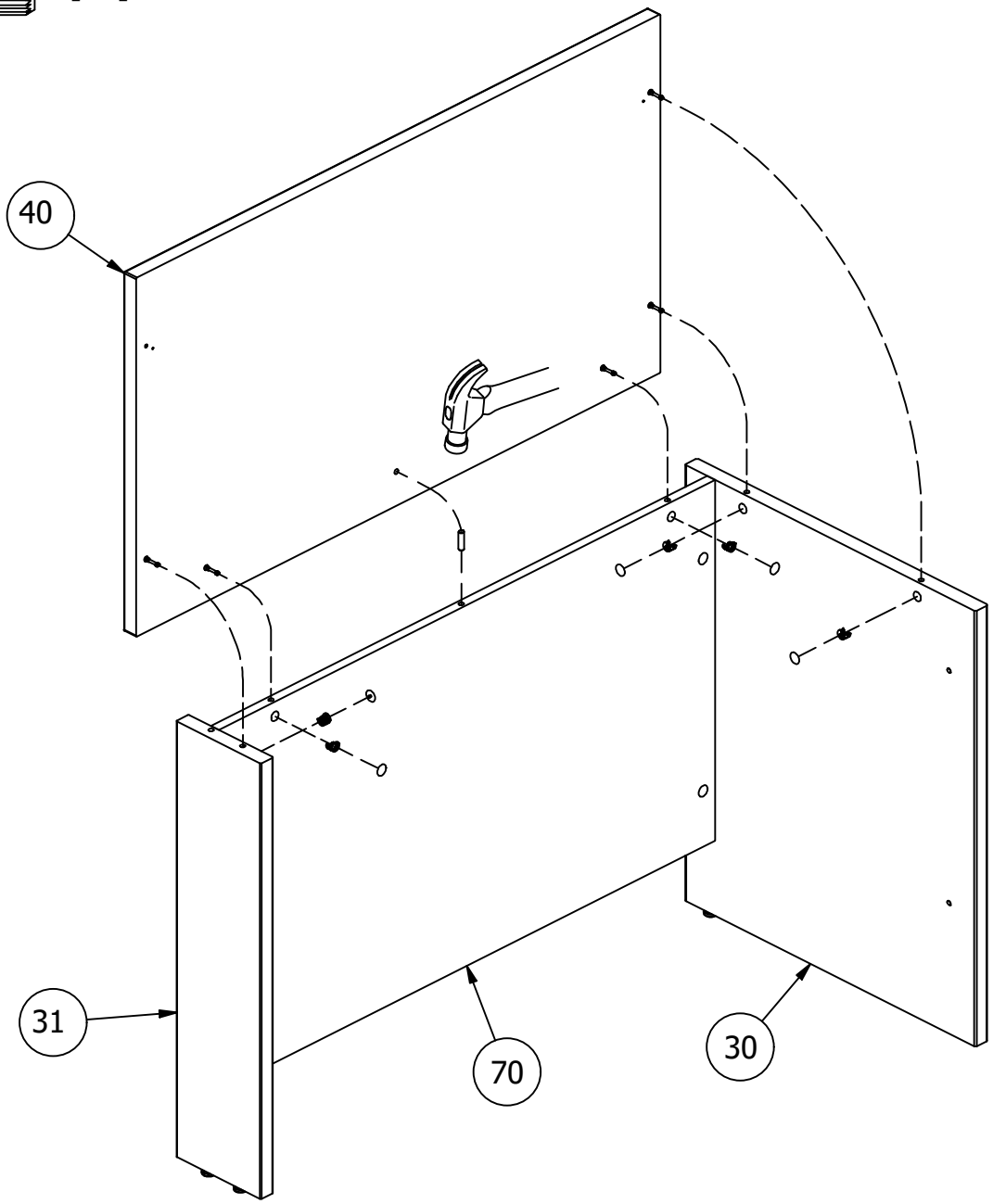

STEP-ÉTAPE-PASO
7

Attach - Fije - Fixer

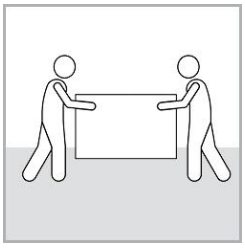

Team Lift
Esfuerzo de equipo
Effort d'équipe

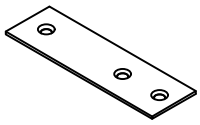

[1]

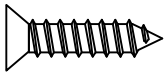

[3]

#10 x 3/4"

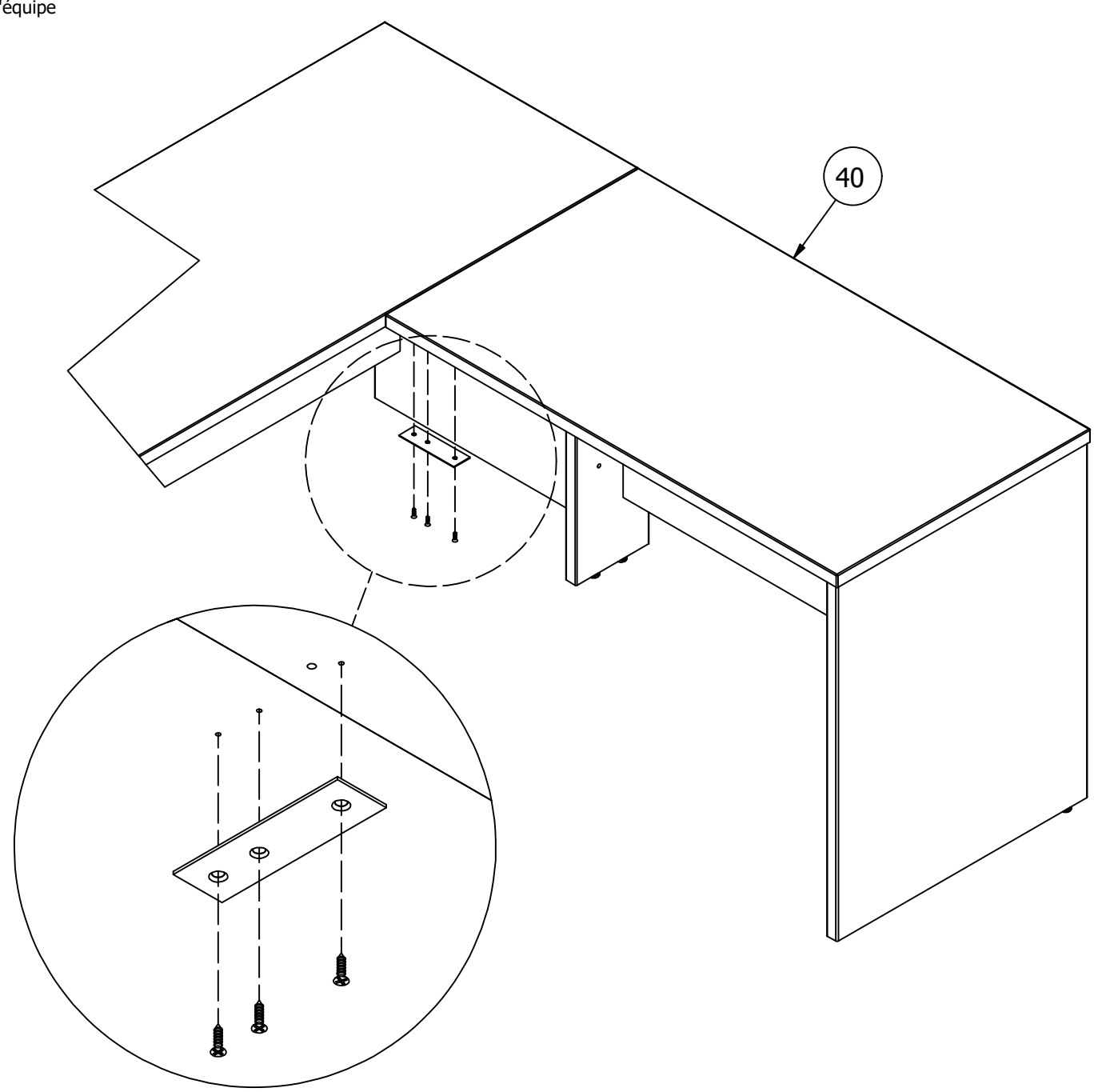

STEP-ÉTAPE-PASO

8

Load - Charge - Carga

Gently clean surfaces with a damp cloth.
Limpie suavemente las superficies con una esponja húmeda.
Nettoyer délicatement les surfaces à l'aide d'une éponge humide.

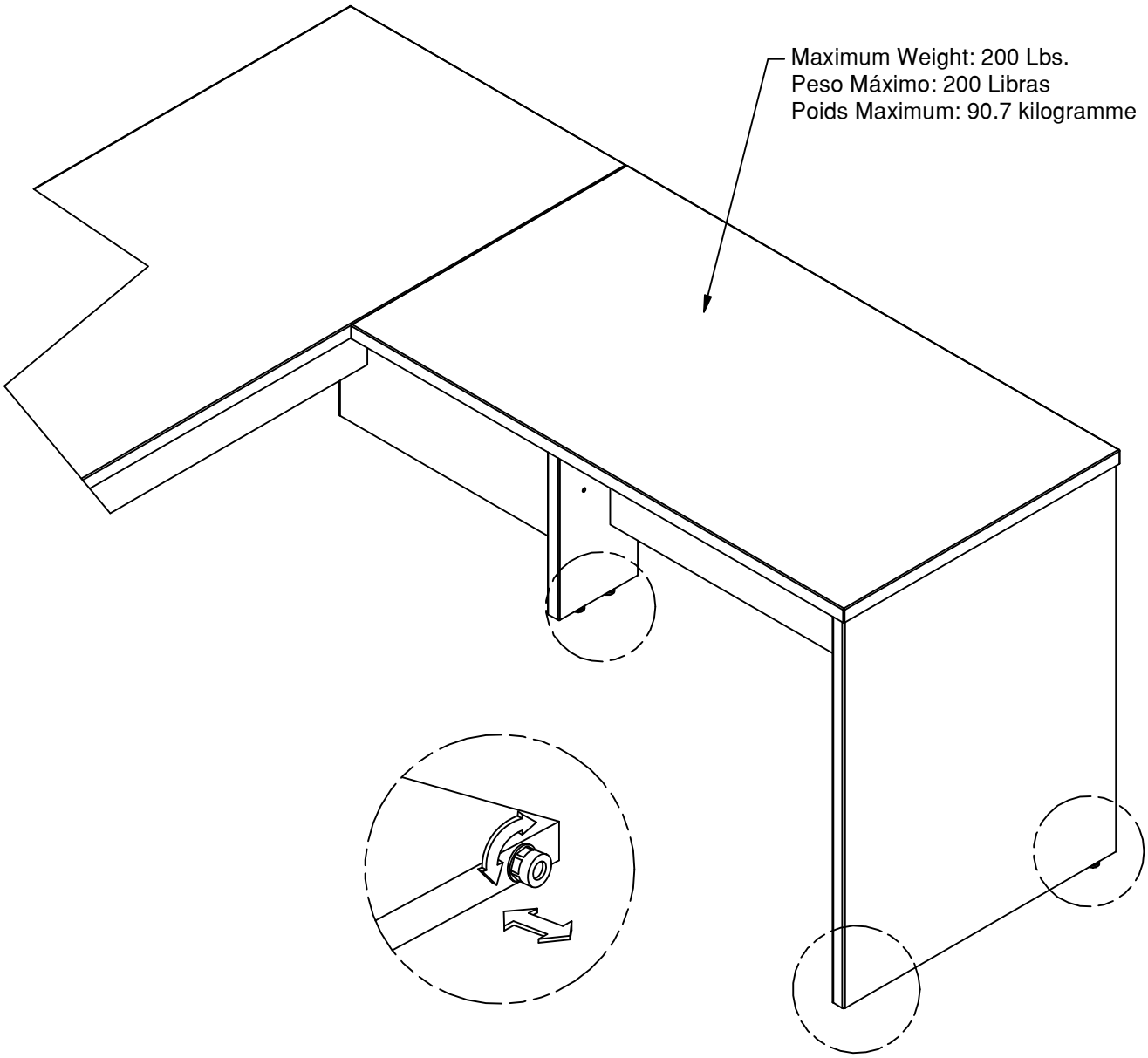

STEP-ÉTAPE-PASO
9

Prepare - Préparer - Preparar

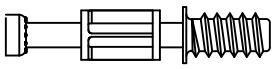
[2]

5mm
[2]

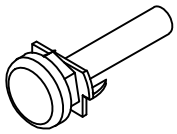
[2]

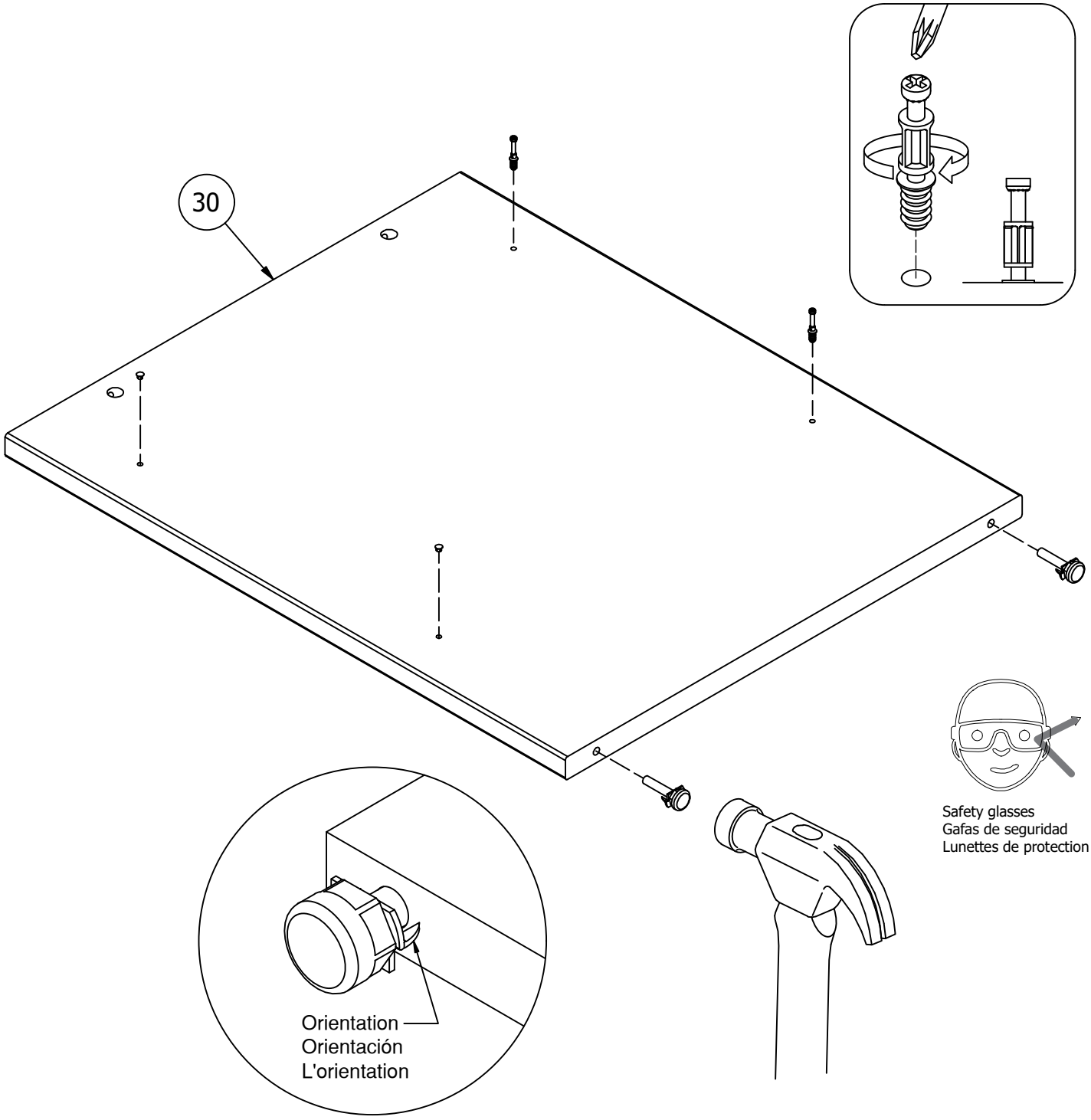

STEP-ÉTAPE-PASO
10

Prepare - Préparer - Preparar

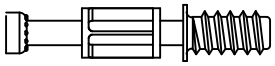
[2]

5mm
[2]

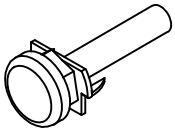
[2]

Orientation
Orientación
L'orientation

31

Safety glasses
Gafas de seguridad
Lunettes de protection

STEP-ÉTAPE-PASO

11

Assemble - Assembler - Assemblar

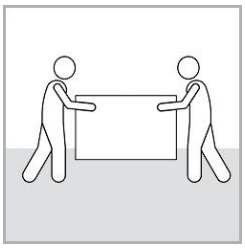

Team Lift
Esfuerzo de equipo
Effort d'équipe

[4]

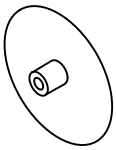

[4]

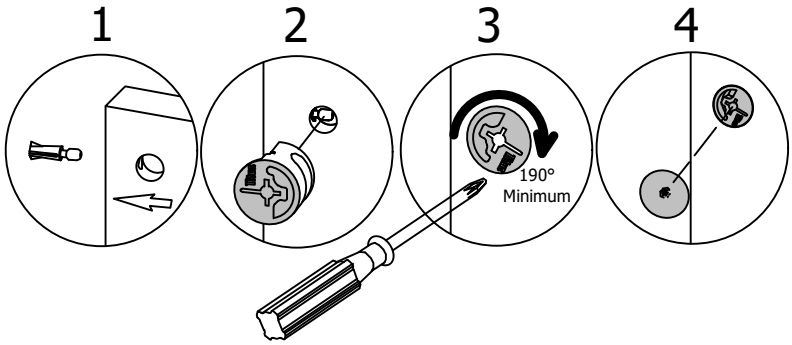

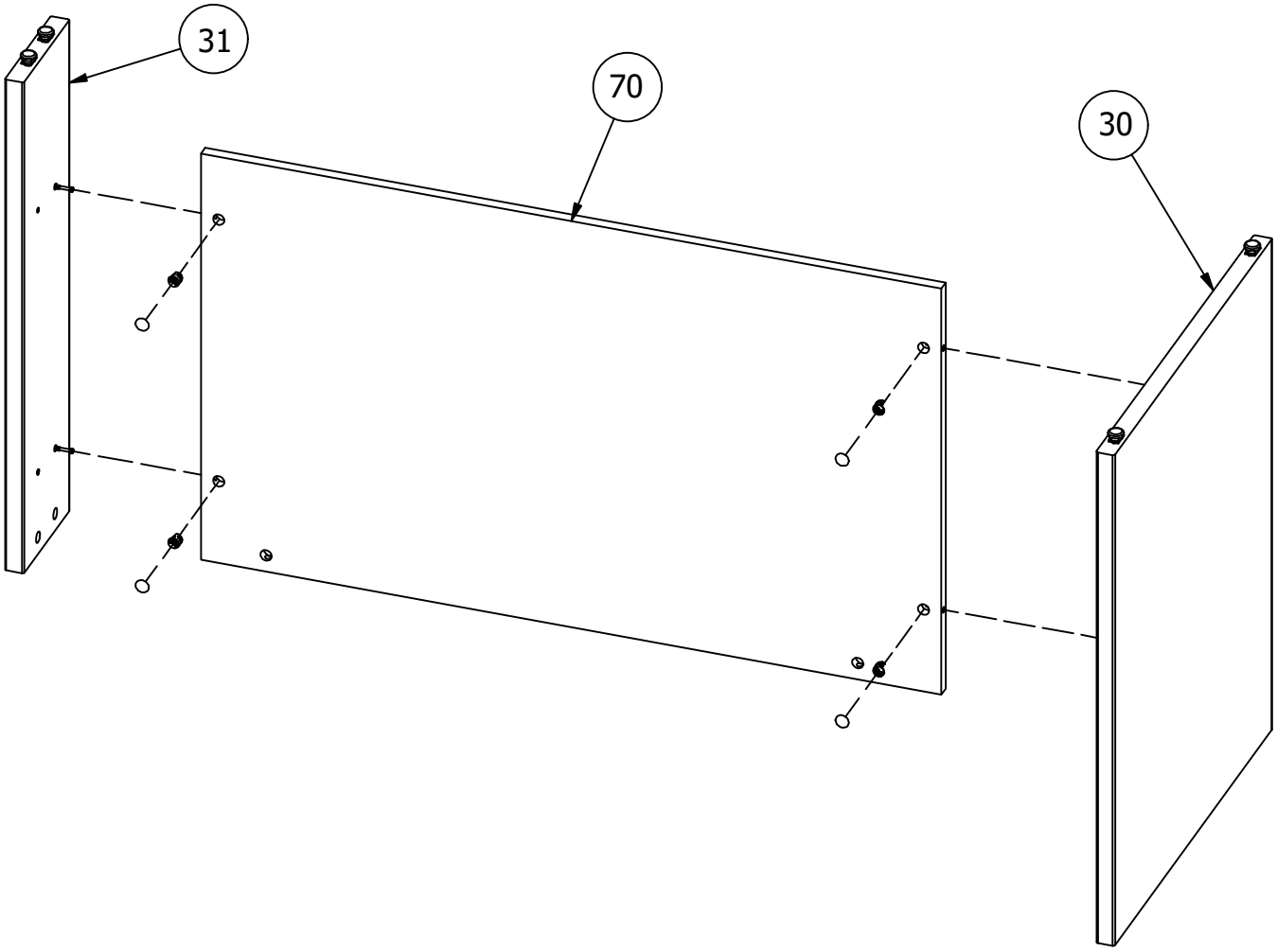

STEP-ÉTAPE-PASO

12

Prepare - Préparer - Preparar

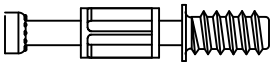

[5]

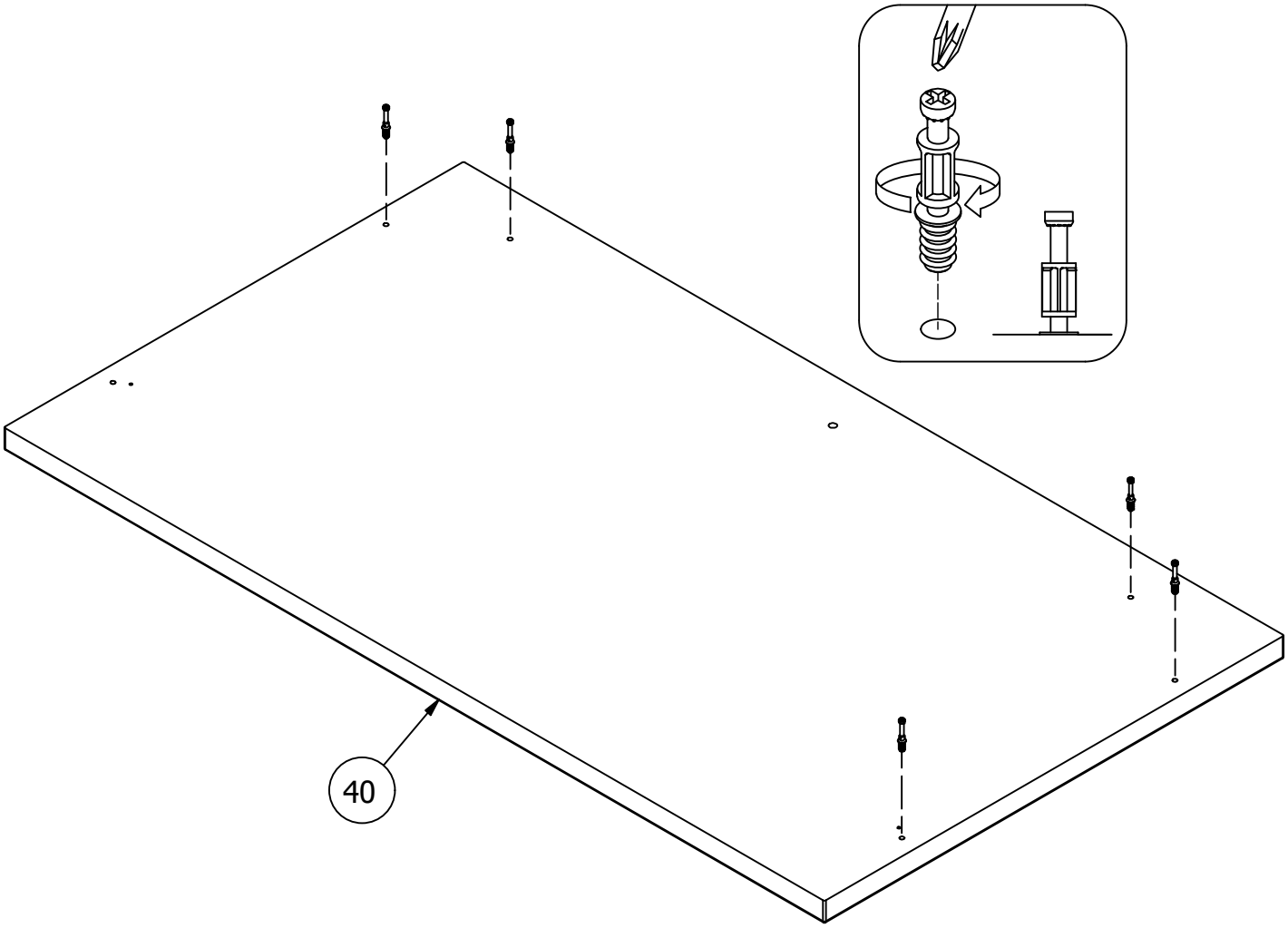

STEP-ÉTAPE-PASO
13

Assemble - Assembler - Assemblar

Team Lift
Esfuerzo de equipo
Effort d'équipe

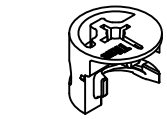

[5]

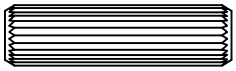

8 x 30

[1]

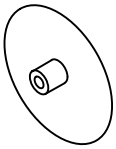

[5]

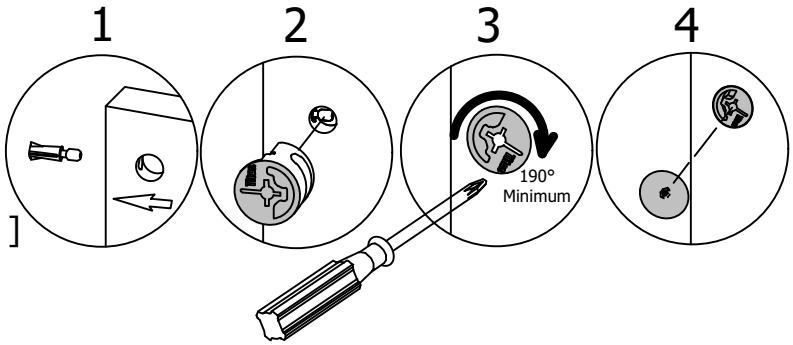

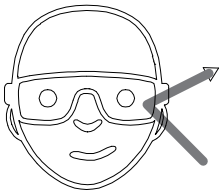

Safety glasses
Gafas de seguridad
Lunettes de protection

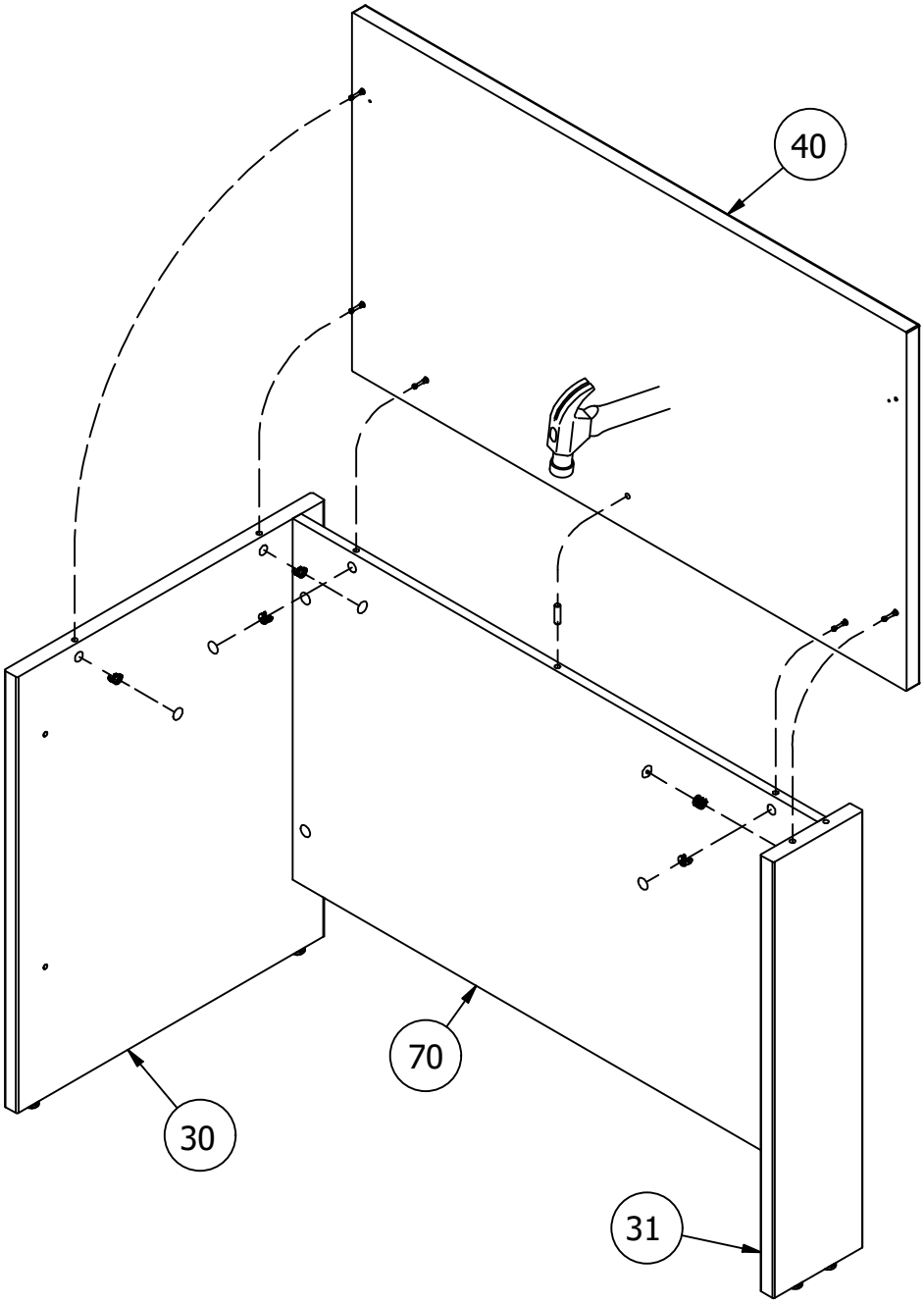

STEP-ÉTAPE-PASO

14

Attach - Fije - Fixer

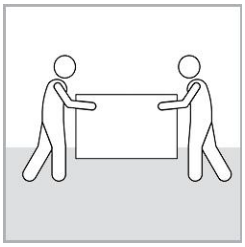

Team Lift
Esfuerzo de equipo
Effort d'équipe

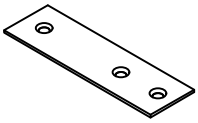

[1]

[3]

#10 x 3/4"

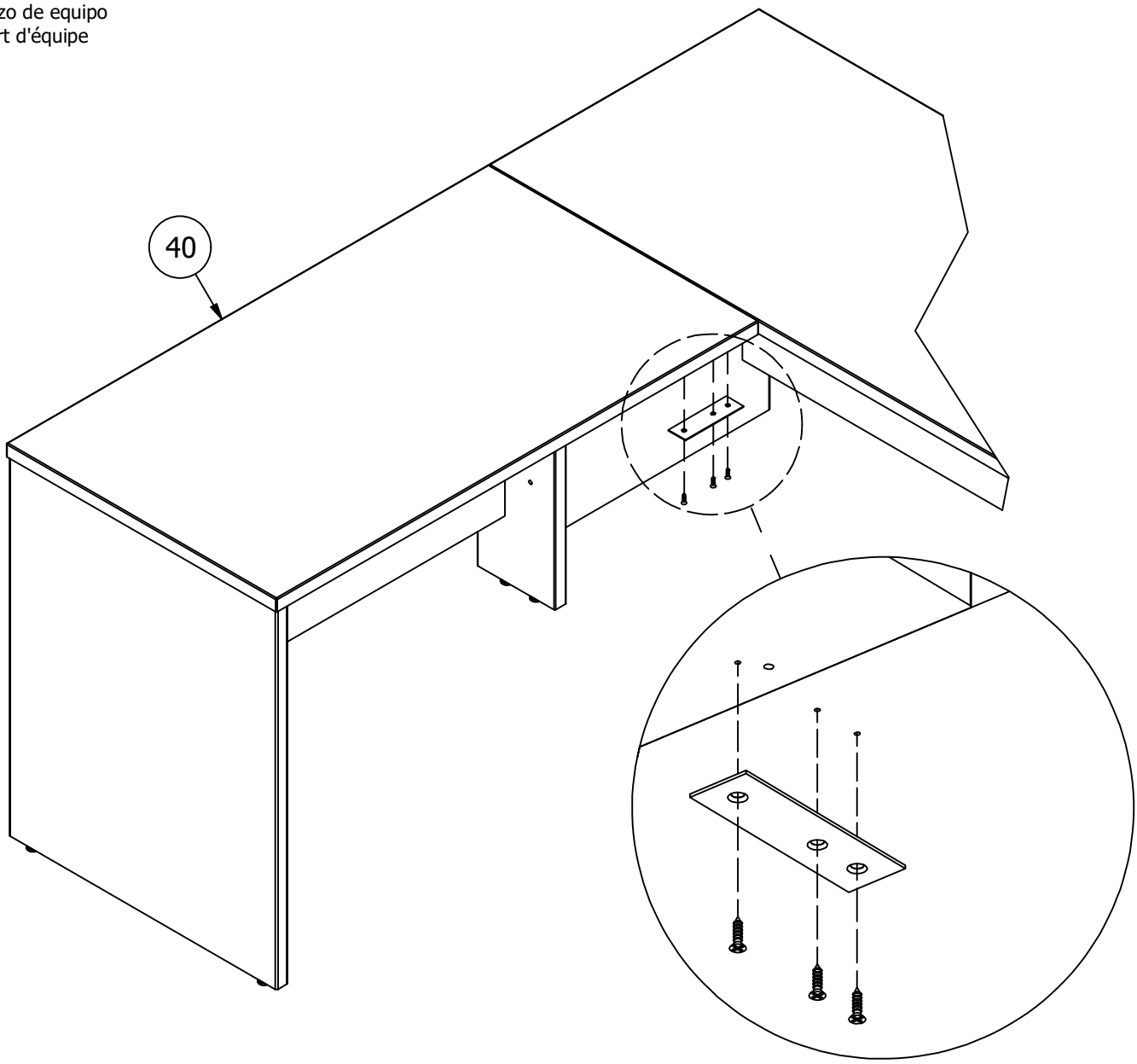

STEP-ÉTAPE-PASO
15

Load - Charge - Carga

Gently clean surfaces with a damp cloth.
Limpie suavemente las superficies con una esponja húmeda.
Nettoyer délicatement les surfaces à l'aide d'une éponge humide.

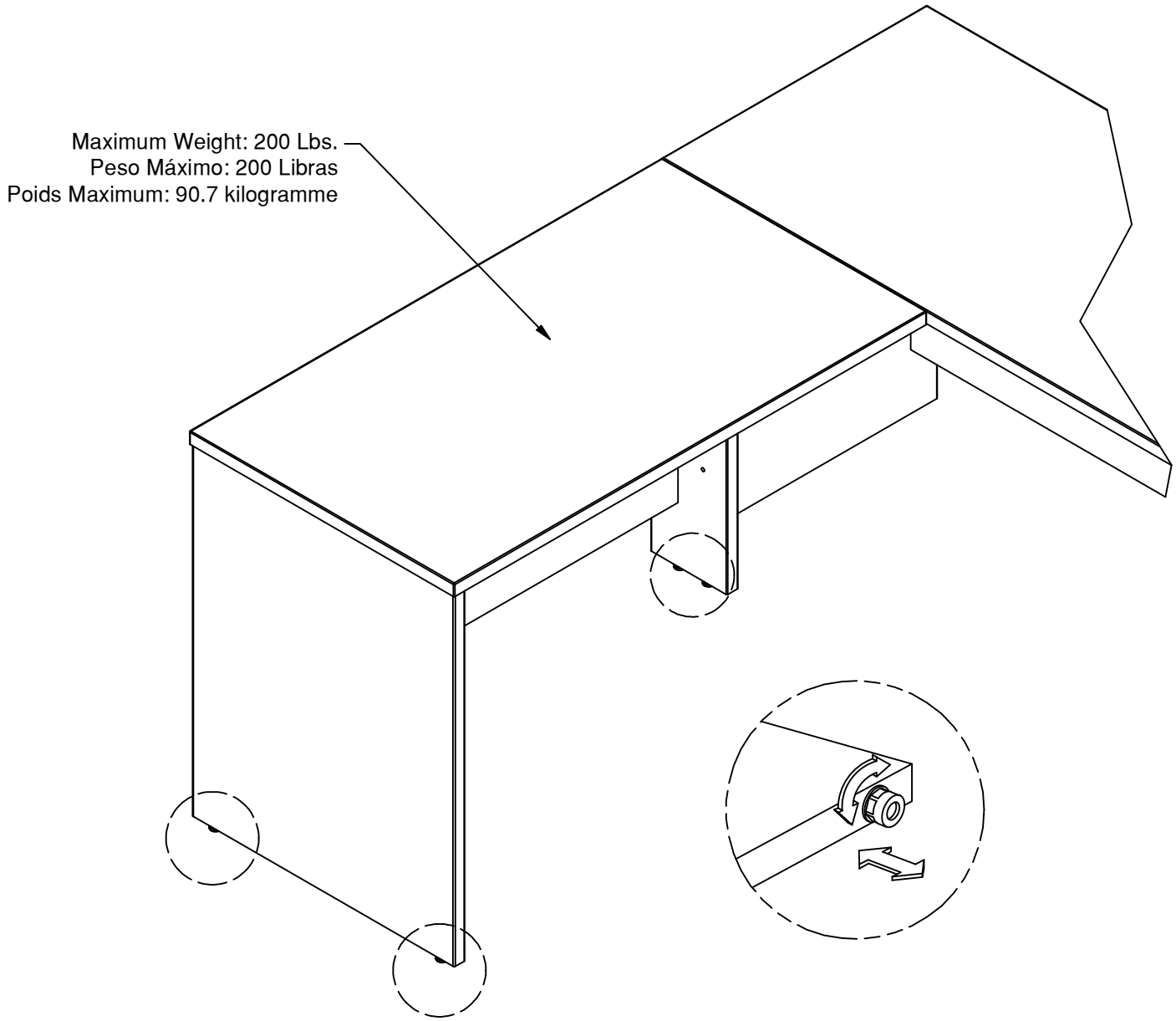

Prepare - Préparer - Preparar

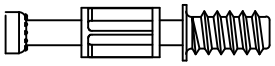
[4]

5mm
[4]

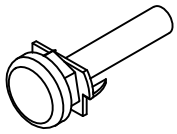
[4]

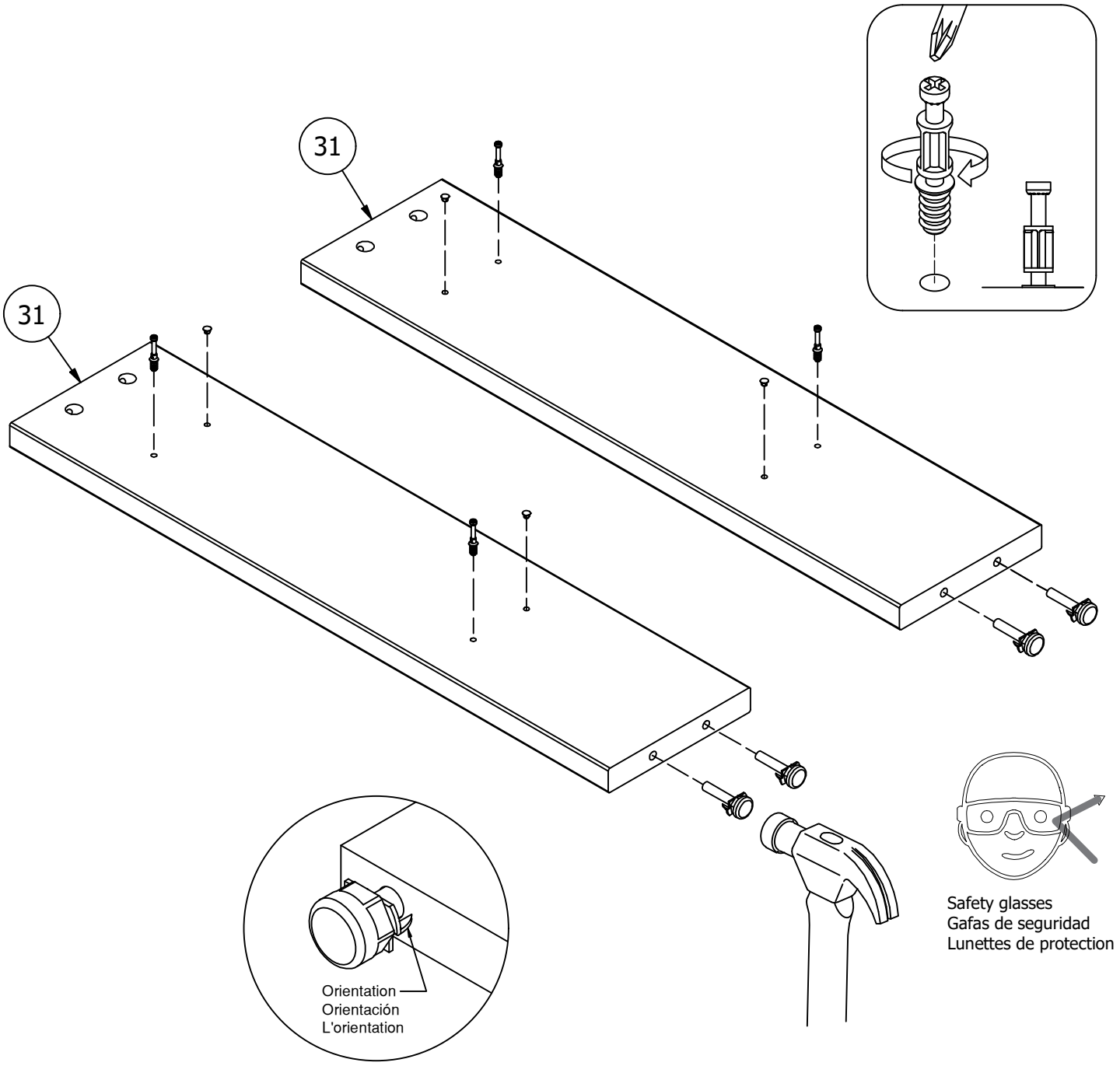

Assemble - Assembler - Assemblar

A177133L

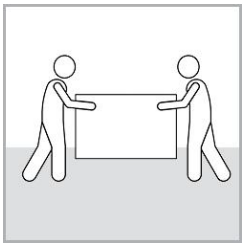

Team Lift
Esfuerzo de equipo
Effort d'équipe

[4]

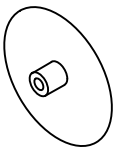

[4]

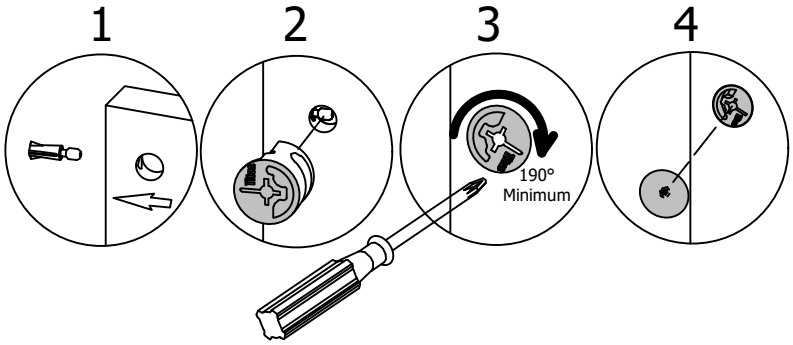

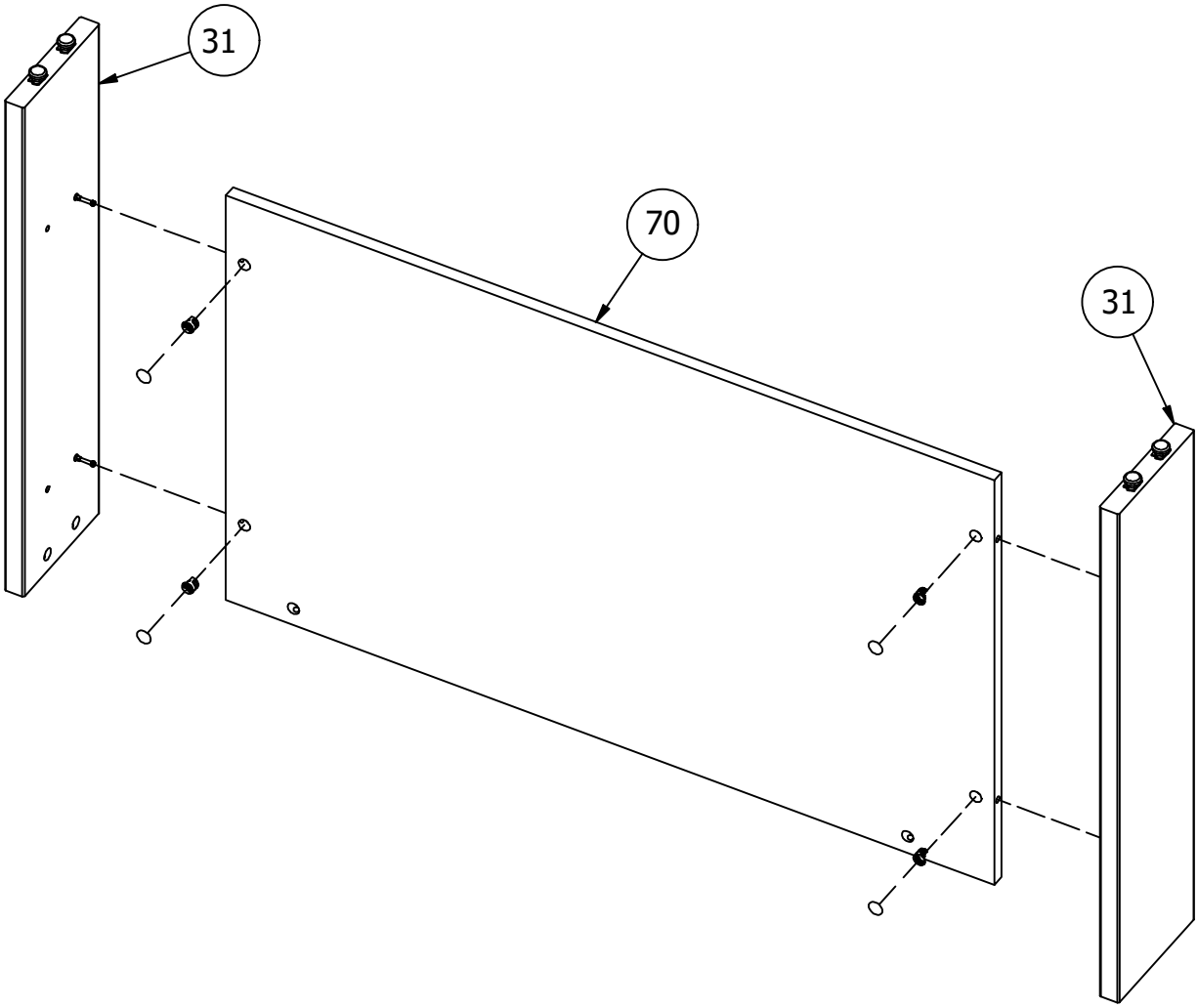

STEP-ÉTAPE-PASO

18

Prepare - Préparer - Preparar

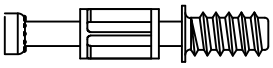

[4]

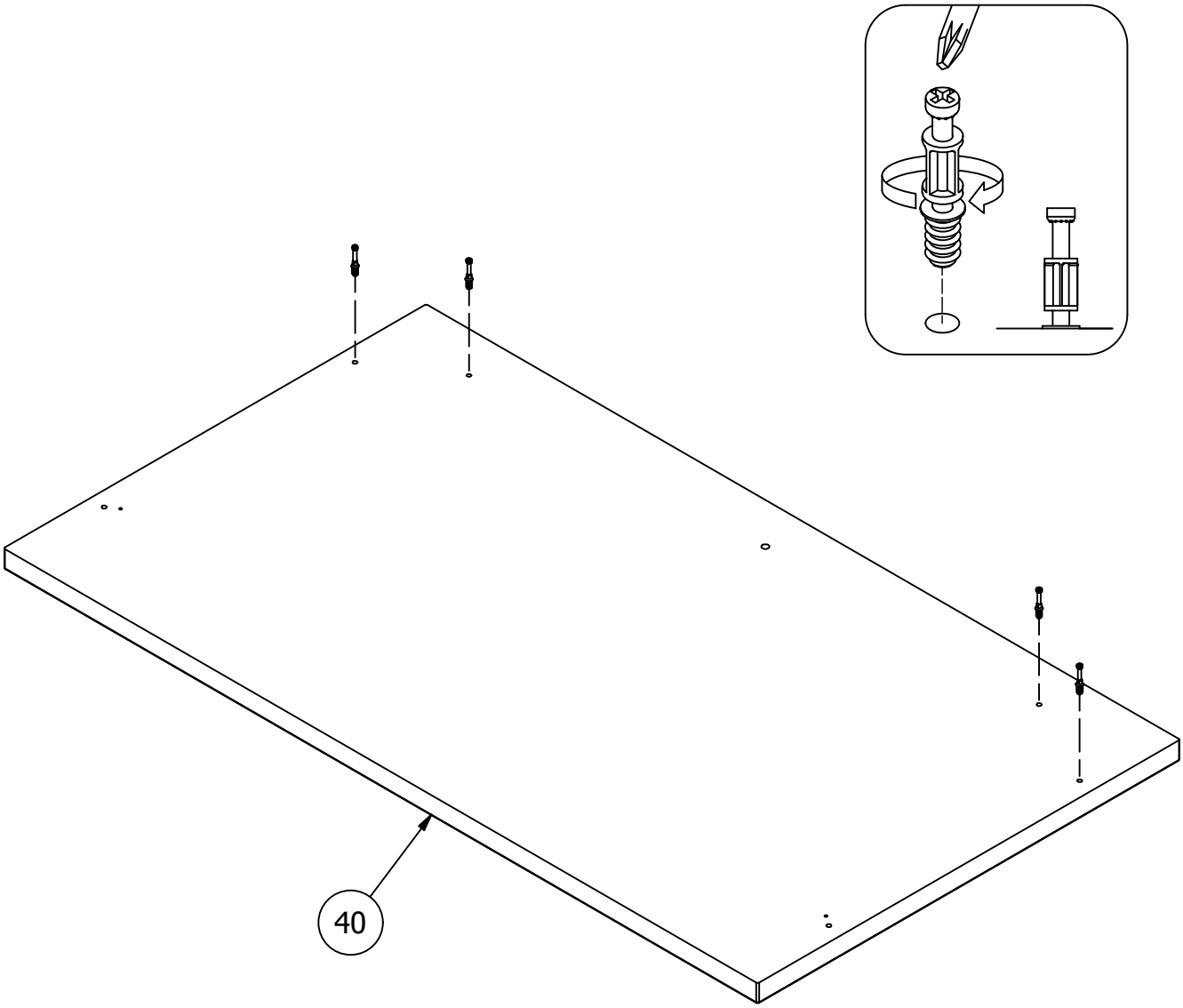

Assemble - Assembler - Assemblar

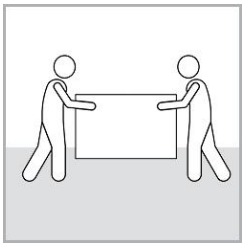

Team Lift
Esfuerzo de equipo
Effort d'équipe

[4]

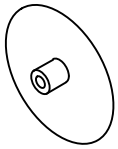

[4]

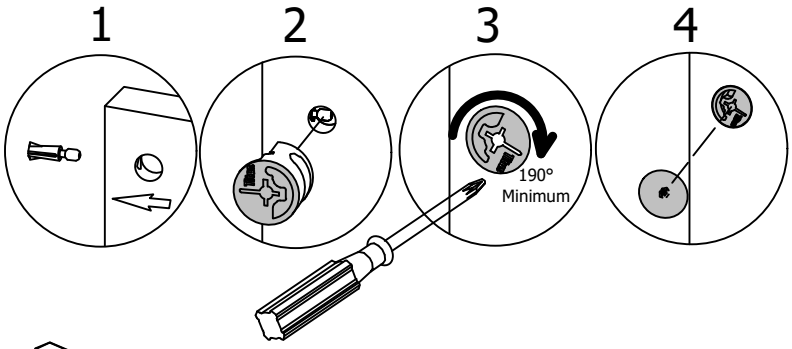

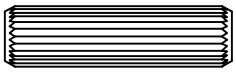

[1]

8 x 30

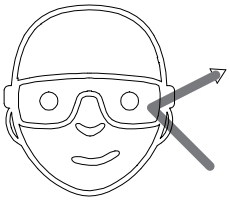

Safety glasses
Gafas de seguridad
Lunettes de protection

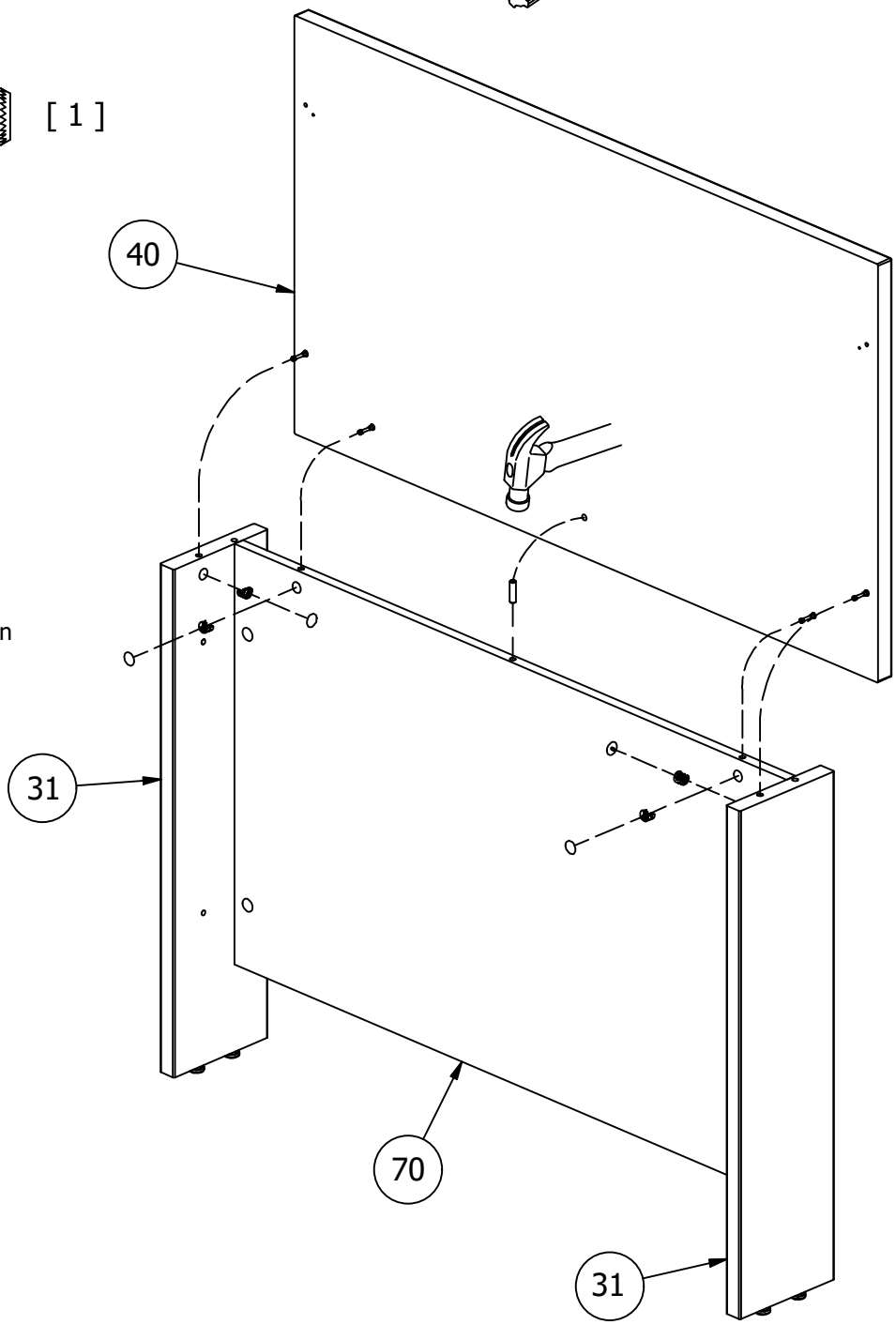

STEP-ÉTAPE-PASO

20

Attach - Fije - Fixer

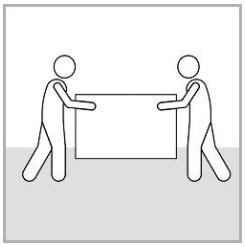

Team Lift
Esfuerzo de equipo
Effort d'équipe

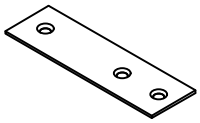

[2]

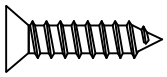

[6]

#10 x 3/4"

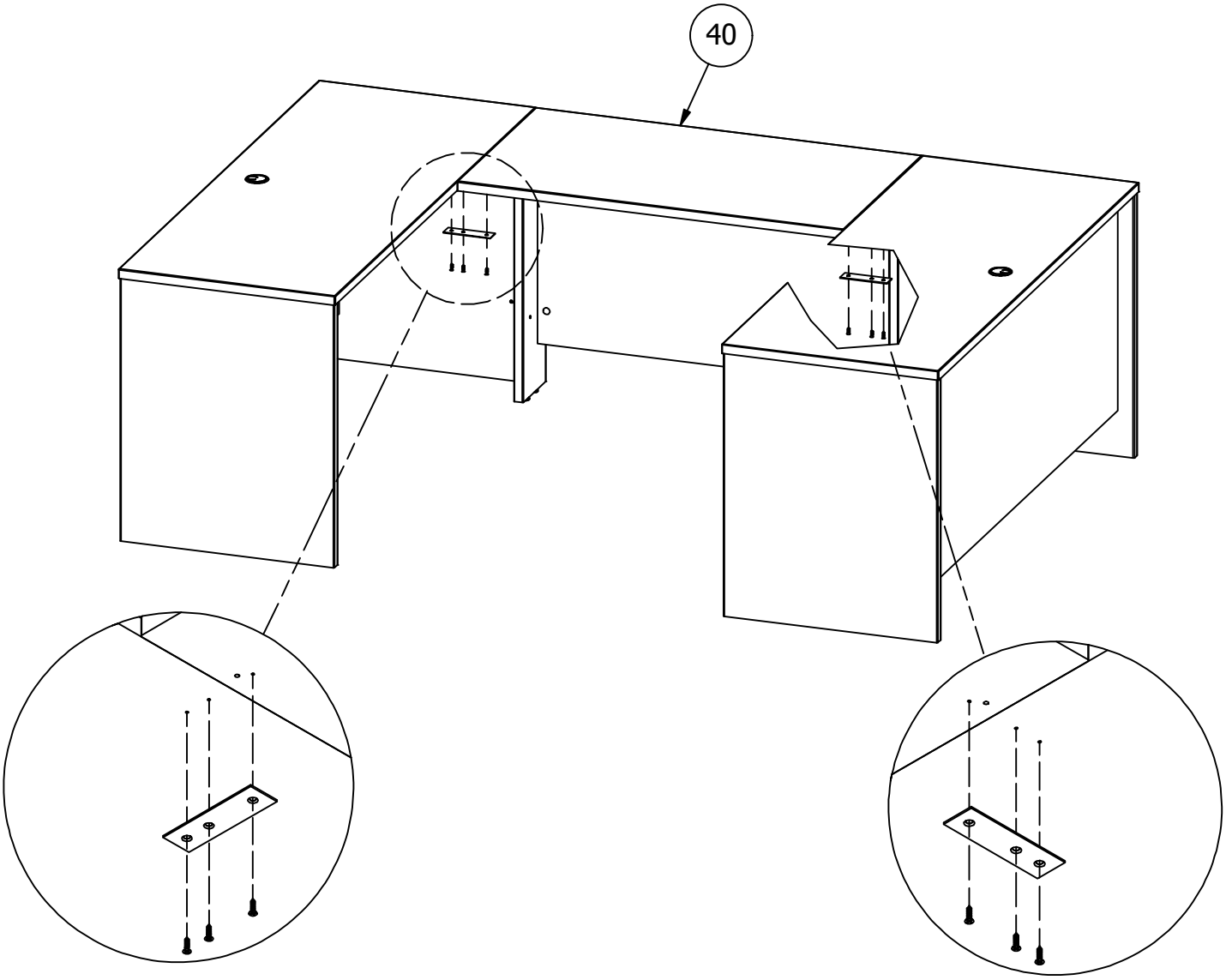

STEP-ÉTAPE-PASO
21

Load - Charge - Carga

Gently clean surfaces with a damp cloth.
Limpie suavemente las superficies con una esponja húmeda.
Nettoyer délicatement les surfaces à l'aide d'une éponge humide.

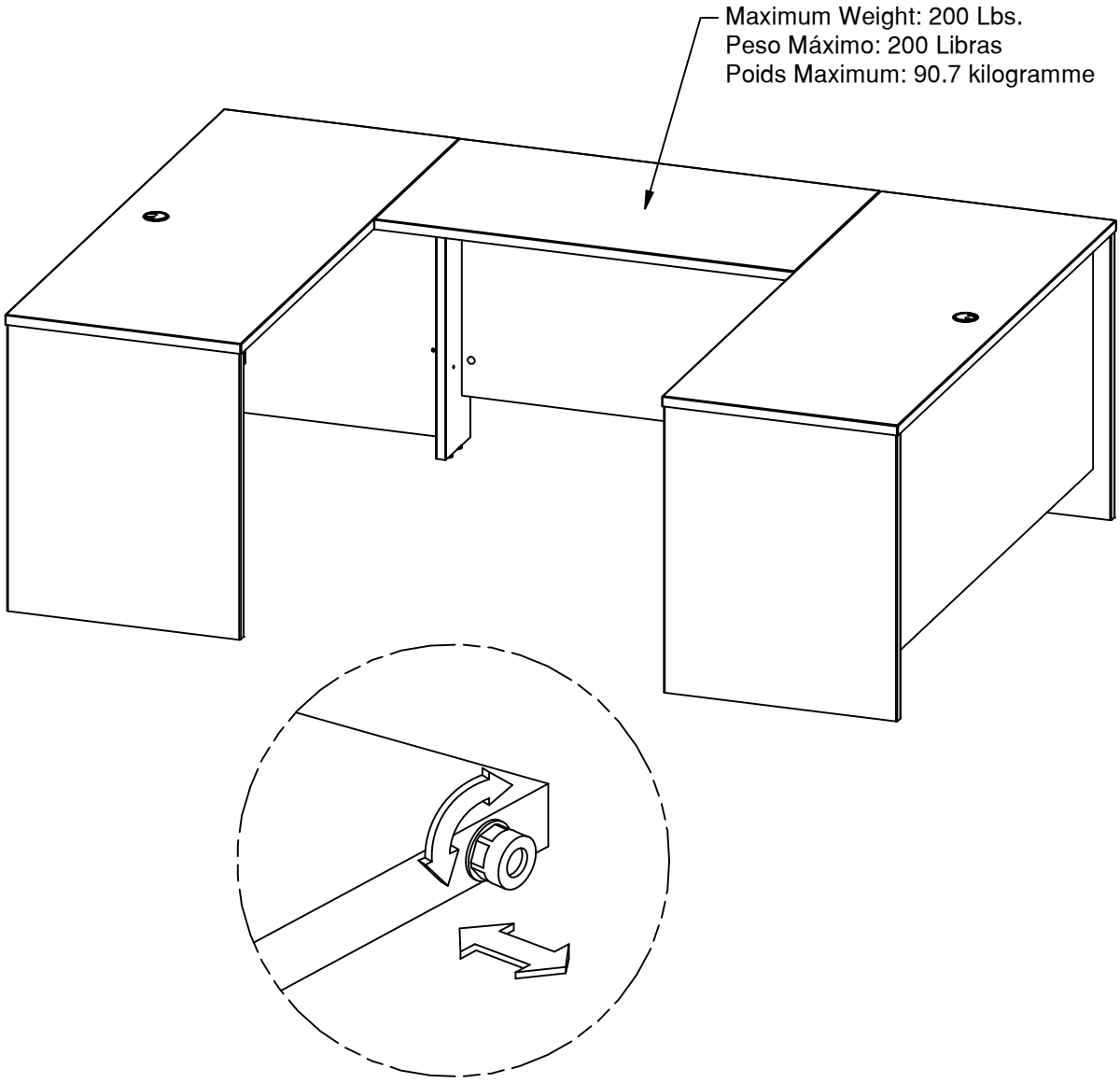

Quality and Safety Guidelines

These guidelines apply across the catalog — seating, tables and desks, storage and shelving, folding and stacking products, classroom and outdoor furniture, and other case goods. Please review this information in addition to the specific assembly instructions included with your product.

BEFORE YOU ASSEMBLE

- Unpack all parts and hardware and check them against the parts list before starting assembly.
- Read all instructions and warnings completely before beginning; assemble on a soft, protected surface.
- Use only the tools and hardware specified in the instructions; do not substitute sizes.
- Tighten all hardware securely but do not overtighten, and get a second person to help with large or heavy pieces.

GENERAL SAFETY & CARE

- Use this product only as intended by the manufacturer; this product is intended for indoor use unless labeled for outdoor/patio use.
- Follow all posted weight capacity limits and usage guidelines provided with the product.
- Do not use the product if any instability, damage, or unusual wear is detected; discontinue use immediately.
- Regularly inspect for loose hardware, worn components, cracks, or other signs of deterioration, and tighten hardware as needed; replace damaged or worn parts only with manufacturer-approved replacement parts.
- Keep children supervised around furniture and any moving components.
- Wipe down surfaces regularly with a soft, clean, lint-free cloth; for most materials, a cloth lightly dampened with mild soap and water is sufficient.
- Avoid harsh chemicals, bleach, ammonia-based cleaners, solvents, and abrasive scrubbers, which can damage finishes, fabric, and hardware.
- Blot spills promptly rather than rubbing, and dry surfaces thoroughly after cleaning; avoid saturating any material with water.
- Keep products out of direct, prolonged sunlight and away from heat sources to help prevent fading, warping, or cracking over time.

STORAGE, SHELVING & MOVING FURNITURE

- Remove contents before moving storage furniture, cabinets, dressers, desks, or shelving units.
- Use proper lifting technique and adequate assistance when moving heavy items; do not drag, push, or pull furniture unless it is designed for such movement.
- Follow all anti-tip and wall-anchoring instructions when provided, especially for tall or top-heavy pieces.
- Keep fingers, hands, and other body parts clear of hinges, drawer slides, lift mechanisms, and folding or adjustable features.

SEATING, FOLDING & ADJUSTABLE PRODUCTS

- Sit fully and properly within the seat area; keep chairs stationary when sitting down or standing up, and do not use seating as a ladder or step stool.
- Do not lean excessively backward, forward, or sideways, as this may result in tipping or loss of balance.
- For rocking, reclining, swivel, or height-adjustable products, use only smooth, controlled movements and avoid excessive force.
- For folding and stacking chairs and tables, confirm legs and locking mechanisms are fully extended and secured before each use, and do not exceed recommended stack height limits.

Warranty & Product Support

For maintenance instructions, replacement parts, warranty information, or product support, please contact **Customer Experience** — Email: customerexperience@theubiquegroup.com | Phone: 866-552-2810.

Additional product information and warranty details can be found at www.theubiquegroup.com.

ASSEMBLY GUIDE
GUIDE D'ASSEMBLAGE
INSTRUCCIONES DE ENSAMBLAJE

FLASHWorkplace

72" Hutch
Huche 60L
Alacena 60An

196861152979
196861152986

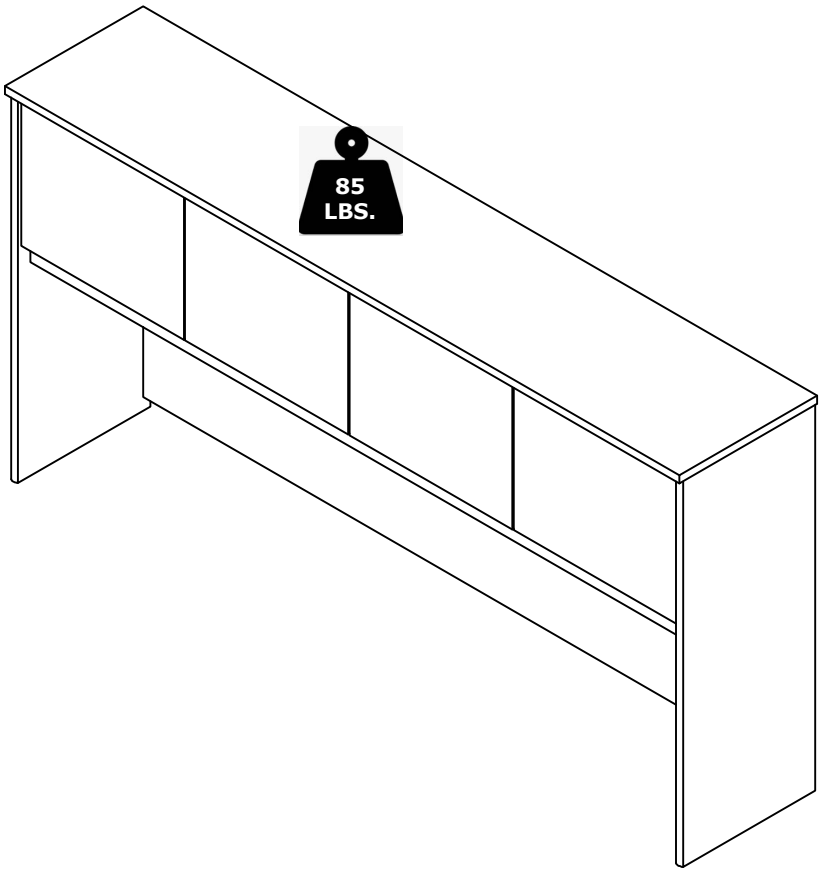

⚠ **NOTE:**
If there are parts missing from your order or if your product was damaged during shipping, PLEASE CONTACT US DIRECTLY.

⚠ **NOTE :**
S'il vous manque des pièces ou si votre meuble a été endommagé pendant le transport, VEUILLEZ NOUS CONTACTER DIRECTEMENT.

⚠ **NOTA:**
En caso de piezas faltantes o si su producto fue dañado durante el envío, POR FAVOR CONTÁCTENOS DIRECTAMENTE.

KEEP MANUAL FOR FUTURE REFERENCE. | CONSERVEZ LE MANUEL POUR RÉFÉRENCE FUTURE. | GUARDE EL MANUAL PARA REFERENCIA FUTURA.

Customer Service Email: CustomerExperience@theubiquegroup.com | Phone: 866-552-2810

Parts - Pièces - Piezas

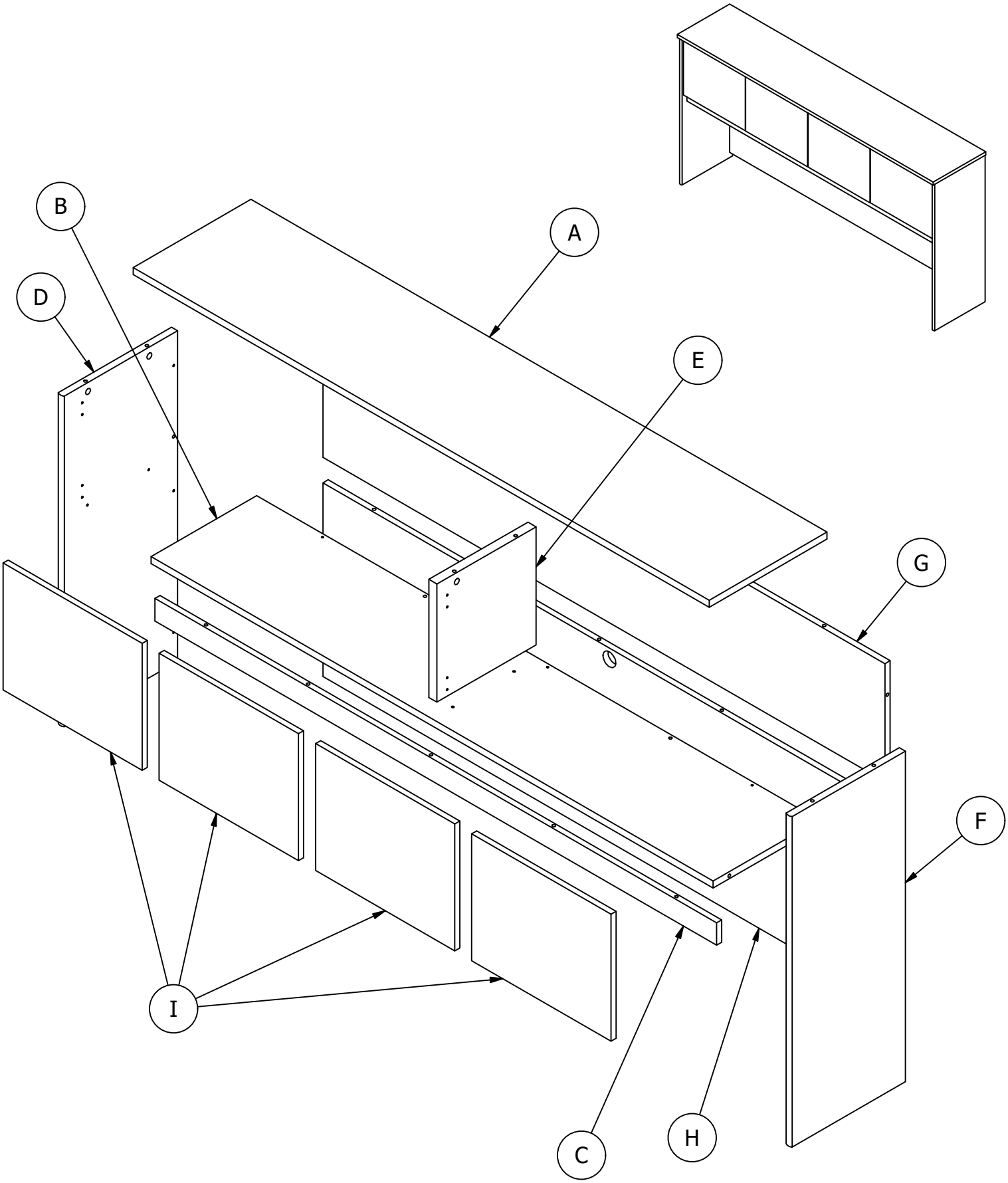

Fasteners - Fixations - Sujetadores

1 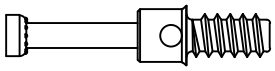 [27]

3

[27]

2

[11]

4 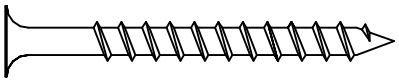

[2]

5 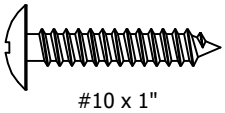

[8]

Hardware - Quincaillerie - Quincaillas

6 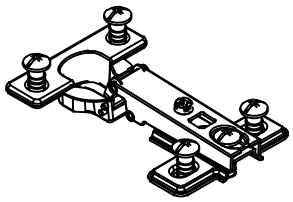 [4]

7 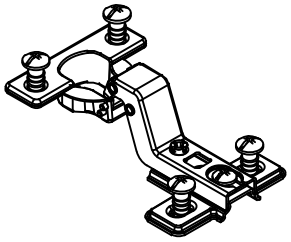 [4]

8 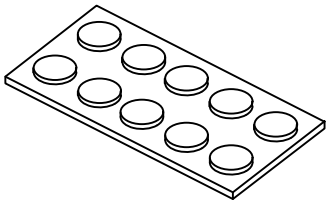 [1]

9 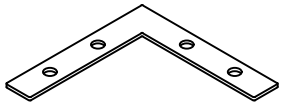 [2]

10 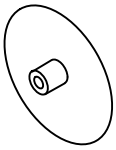 [24]

11 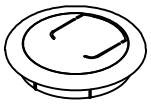 [1]

TIPOVER RESTRAINT HARDWARE

SUGERENCIA SOBRE HARDWARE DE RETENCIÓN

MATÉRIEL DE RETENUE SUR LE SUPPORT

12 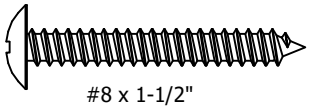
#8 x 1-1/2"
[1]

13 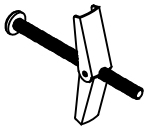 [1]

14 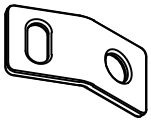 [2]

15 [1]

16 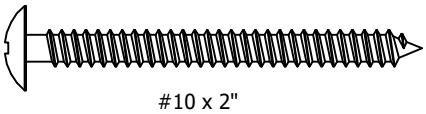
#10 x 2"
[1]

Have an assembly question or need a replacement part? Just call 1-800-950-4782, we are here to help.
¿Tiene alguna pregunta sobre el montaje o necesita una pieza de repuesto? Simplemente llame al 1-800-950-4782, estamos aquí para ayudarle.
Vous avez une question concernant l'assemblage ou vous avez besoin d'une pièce de rechange? Appelez au 1-800-950-4782, nous sommes là pour vous aider.

STEP-ÉTAPE-PASO

1

Prepare - Préparer - Preparar

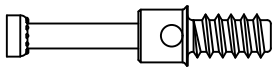

[9]

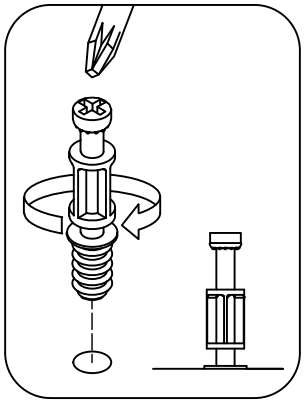

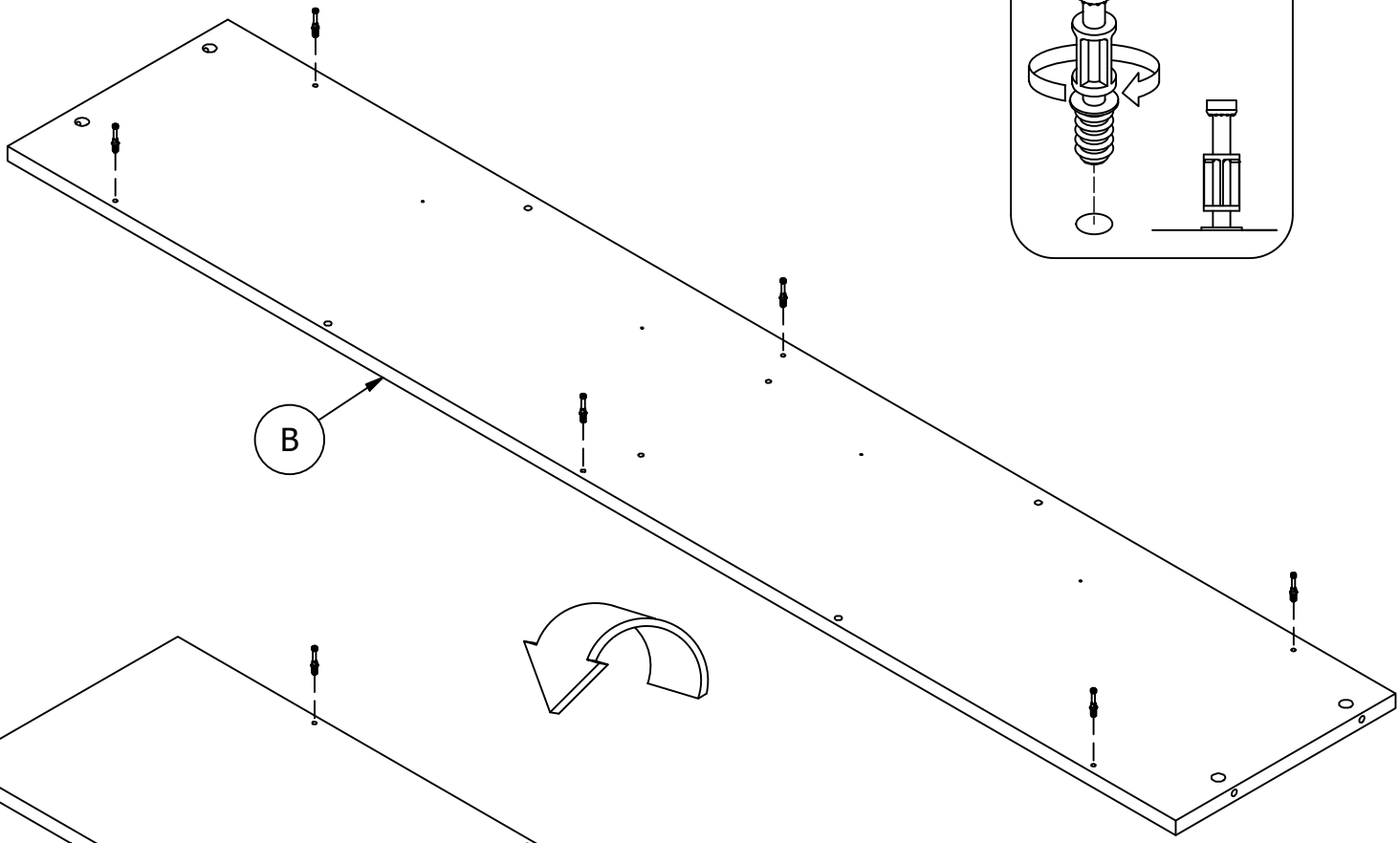

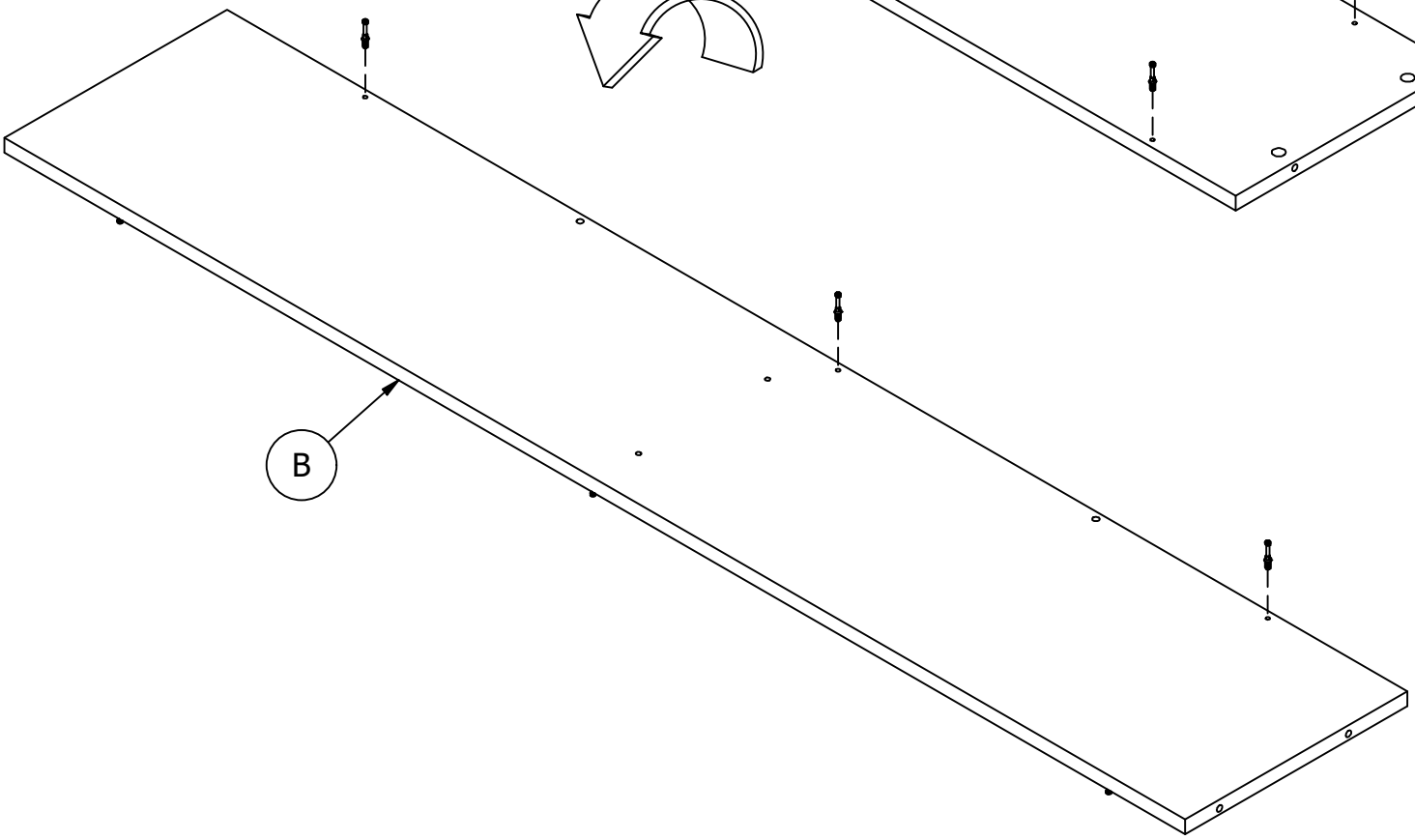

STEP-ÉTAPE-PASO
2

Prepare - Préparer - Preparar

[2]

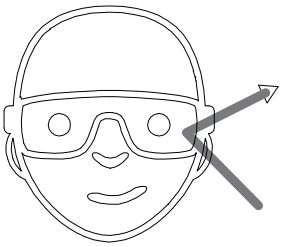

Safety glasses
Gafas de seguridad
Lunettes de protection

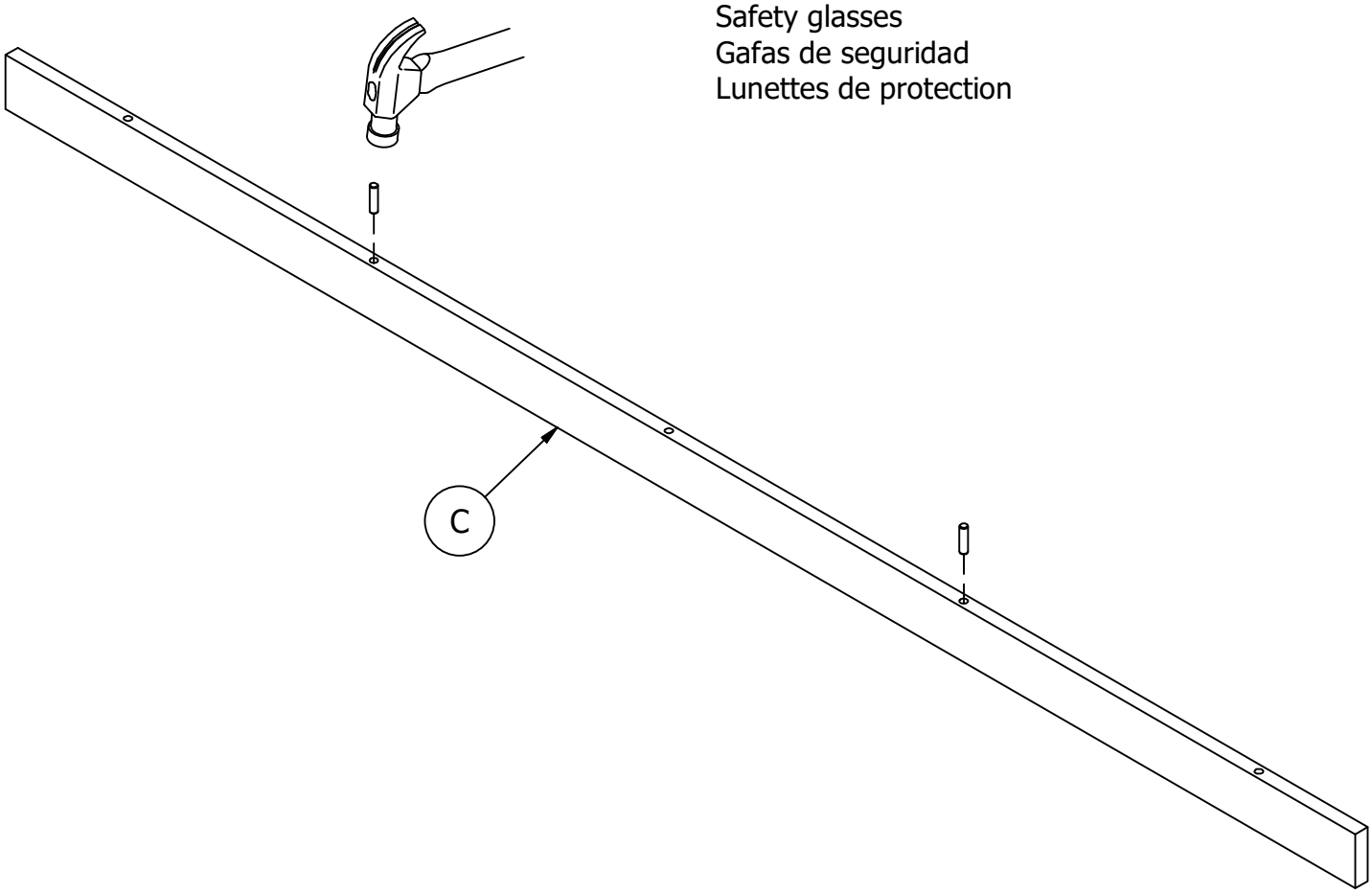

STEP-ÉTAPE-PASO

3

Assemble - Assembler - Assemblar

[3]

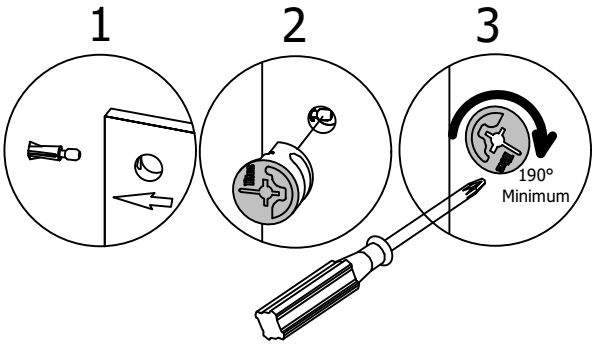

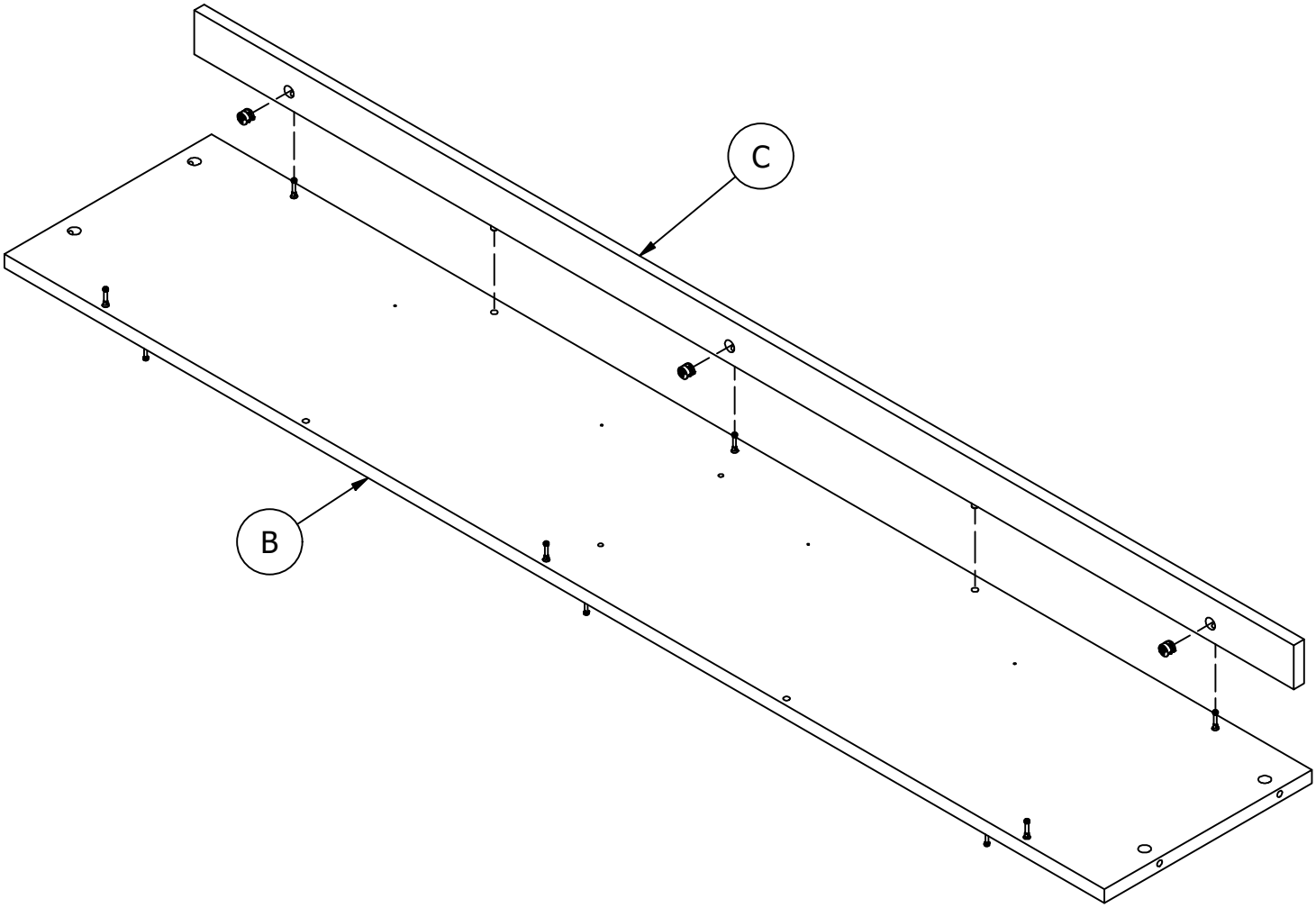

STEP-ÉTAPE-PASO
4

Prepare - Préparer - Preparar

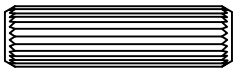

8 x 30

[6]

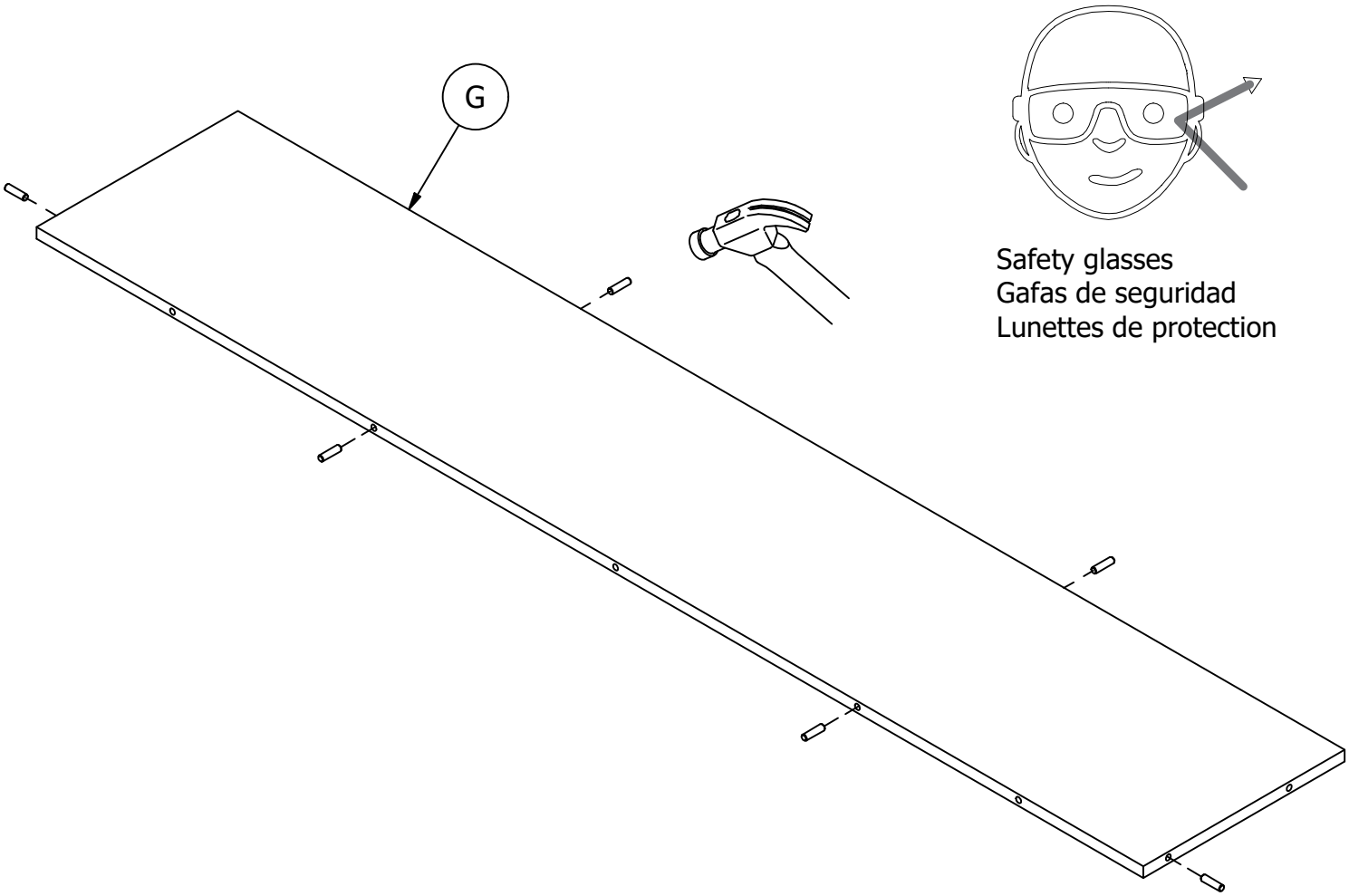

Safety glasses
Gafas de seguridad
Lunettes de protection

STEP-ÉTAPE-PASO
5

Assemble - Assembler - Assemblar

[3]

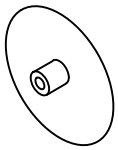

[3]

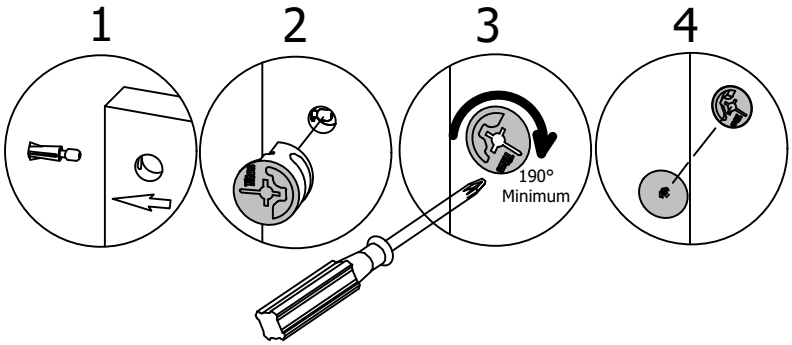

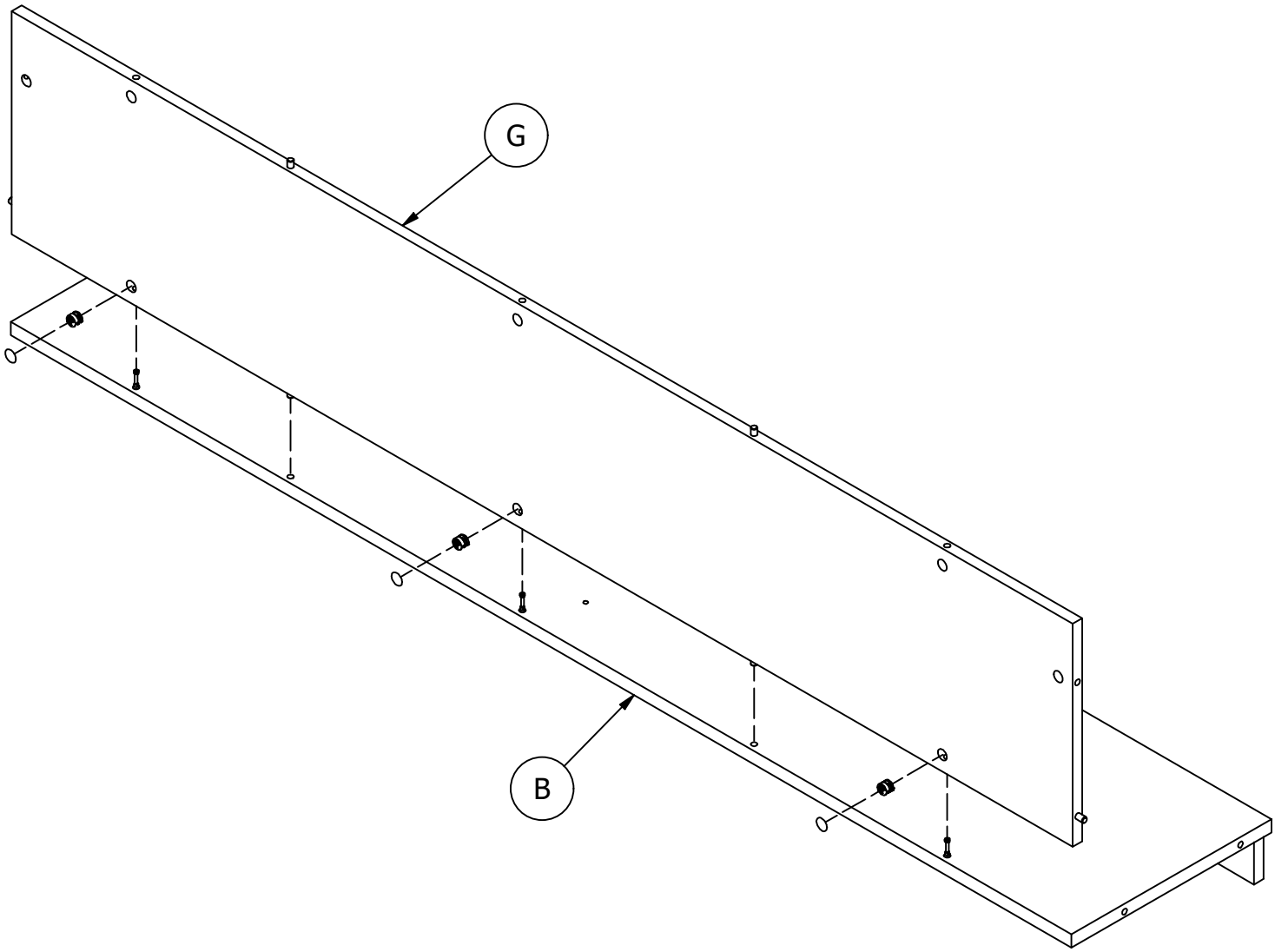

STEP-ÉTAPE-PASO
6

Prepare - Préparer - Preparar

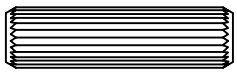

8 x 30

[1]

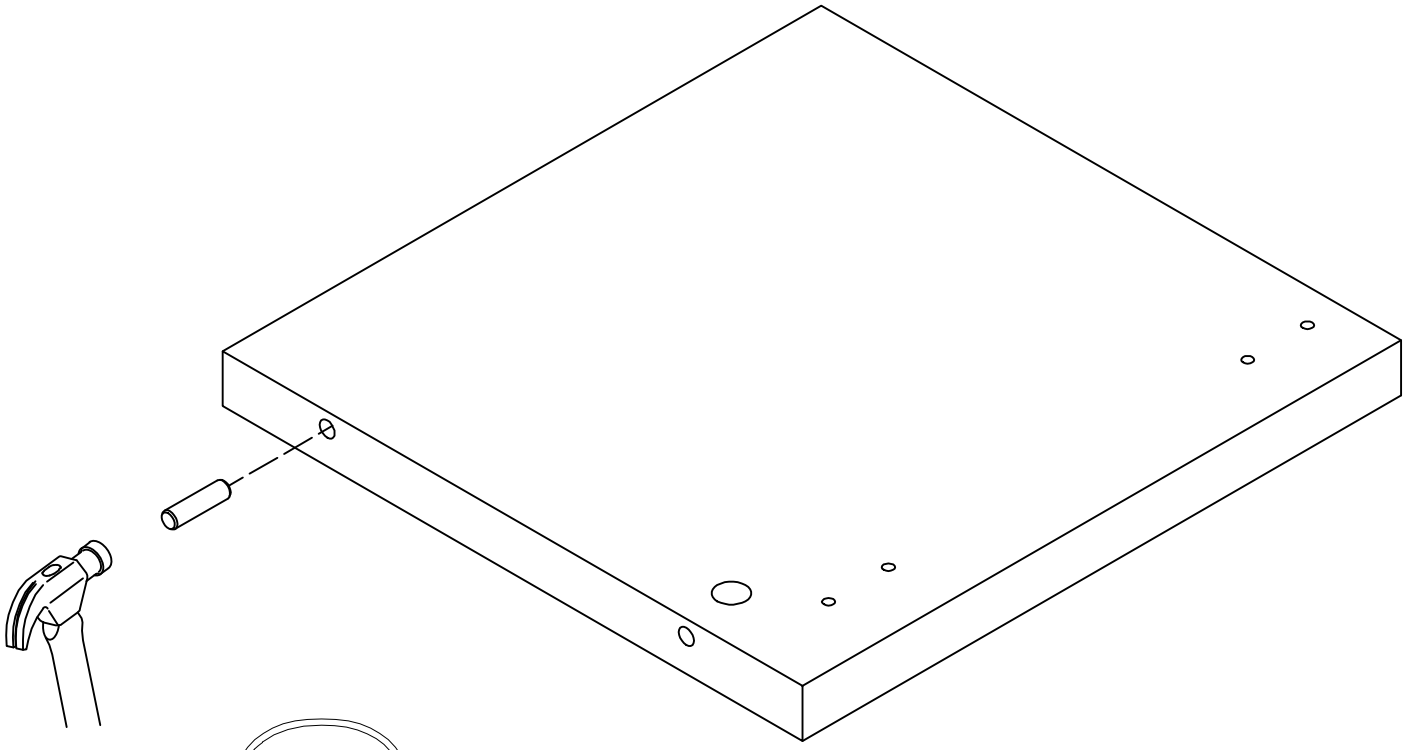

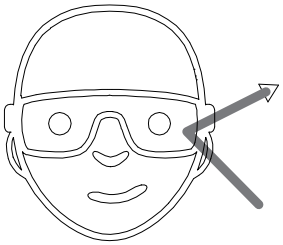

Safety glasses
Gafas de seguridad
Lunettes de protection

STEP-ÉTAPE-PASO
7

Assemble - Assembler - Assemblar

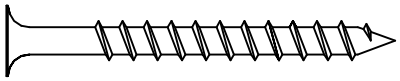

[2]

#10 x 2"

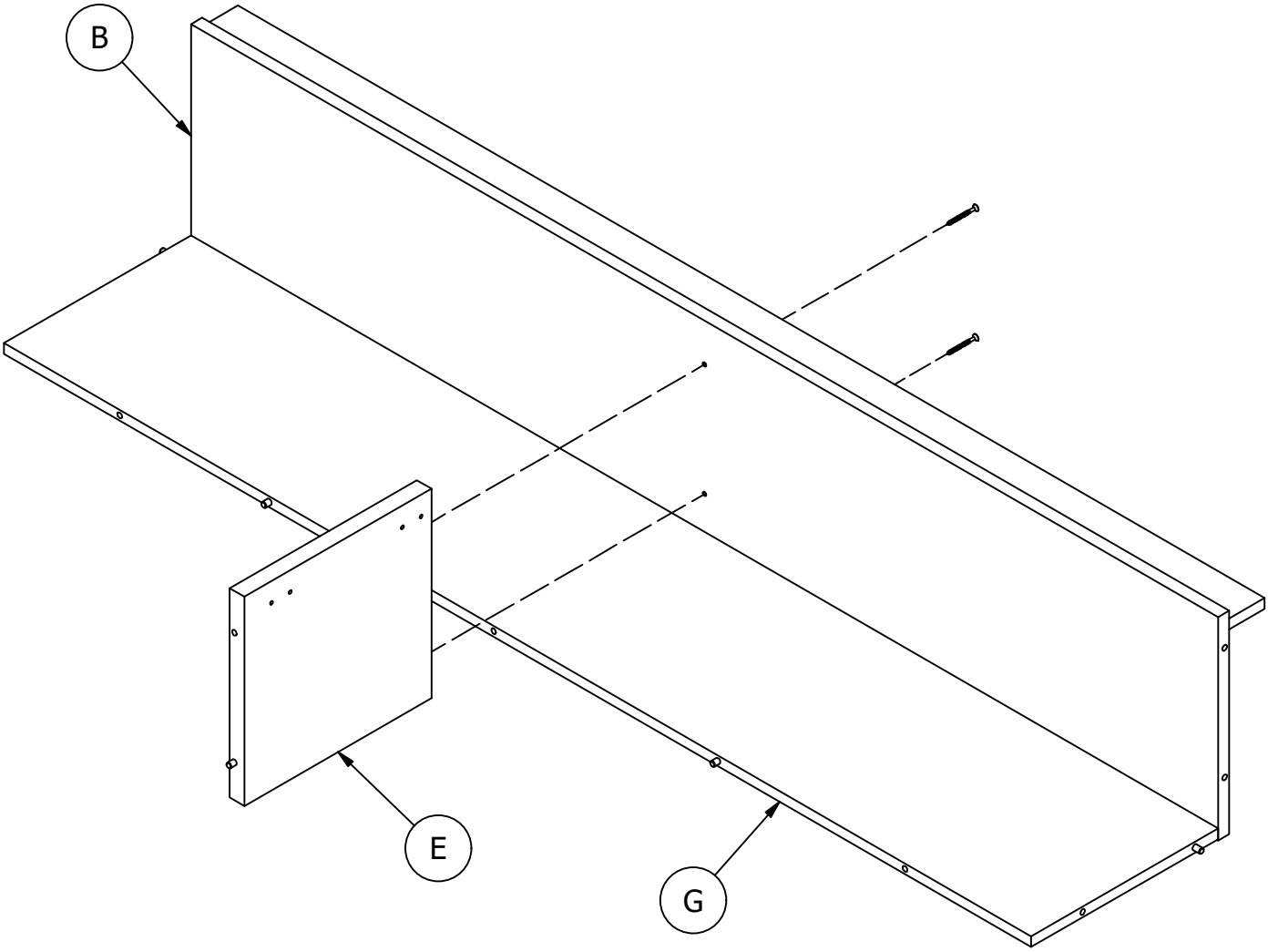

STEP-ÉTAPE-PASO

8

Prepare - Préparer - Preparar

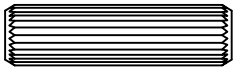

8 x 30

[2]

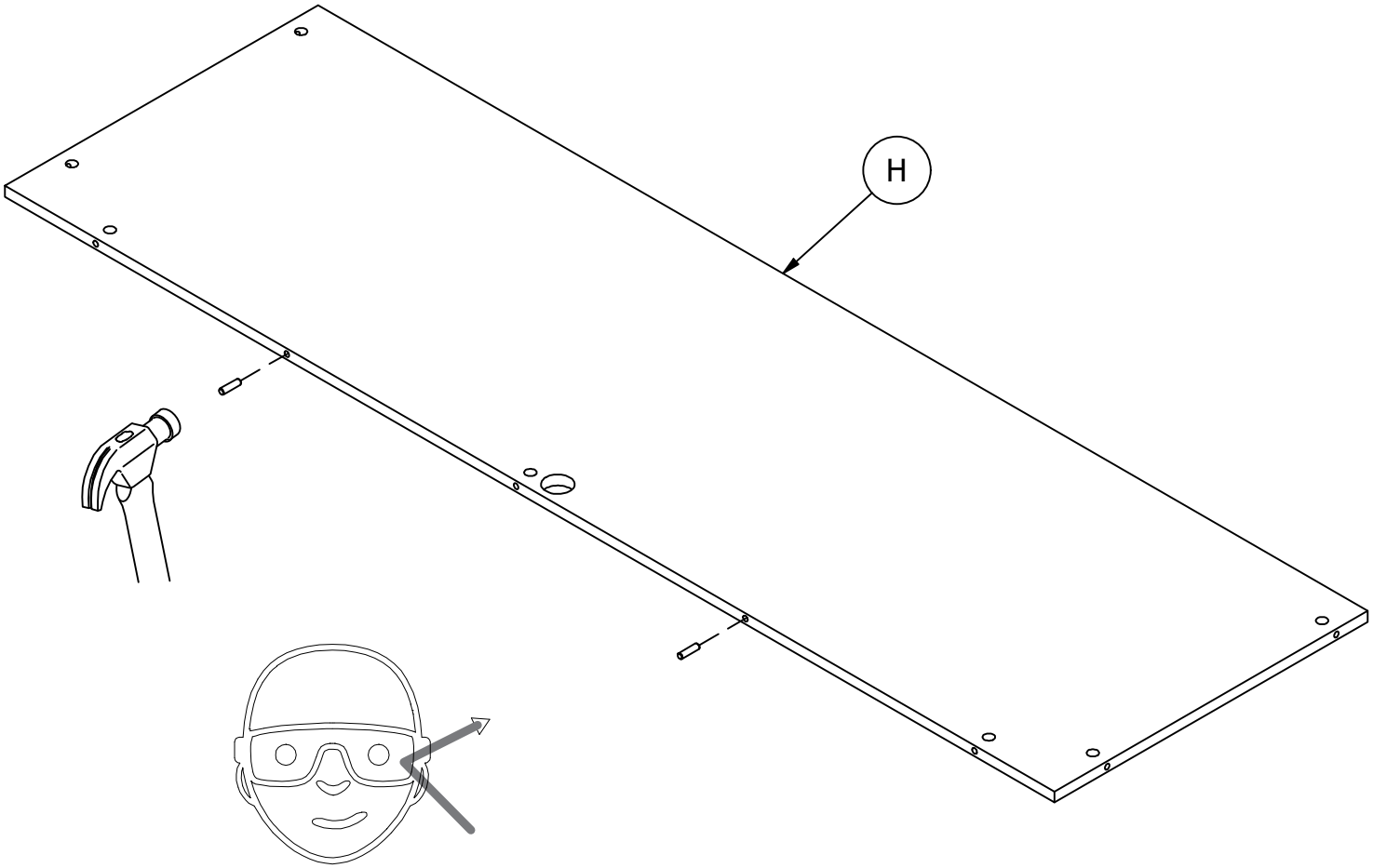

Safety glasses
Gafas de seguridad
Lunettes de protection

STEP-ÉTAPE-PASO
9

Assemble - Assembler - Assemblar

Team Lift
Esfuerzo de equipo
Effort d'équipe

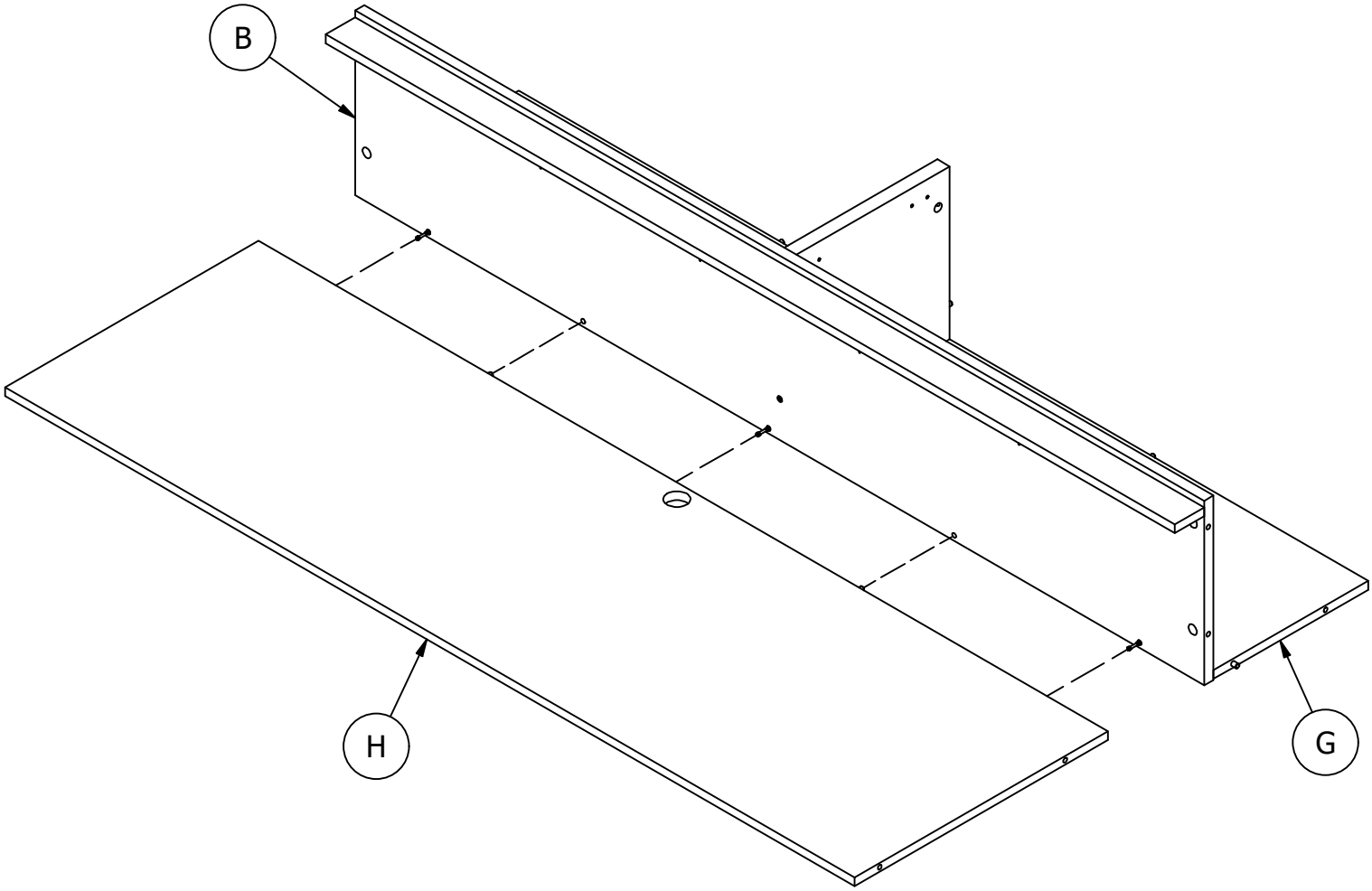

STEP-ÉTAPE-PASO

10

Prepare - Préparer - Preparar

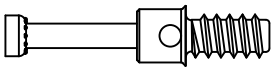

[5]

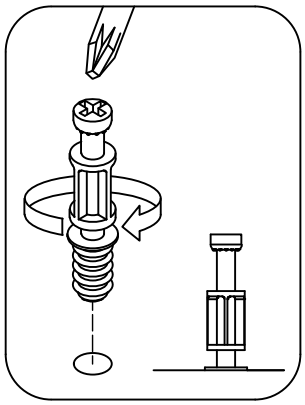

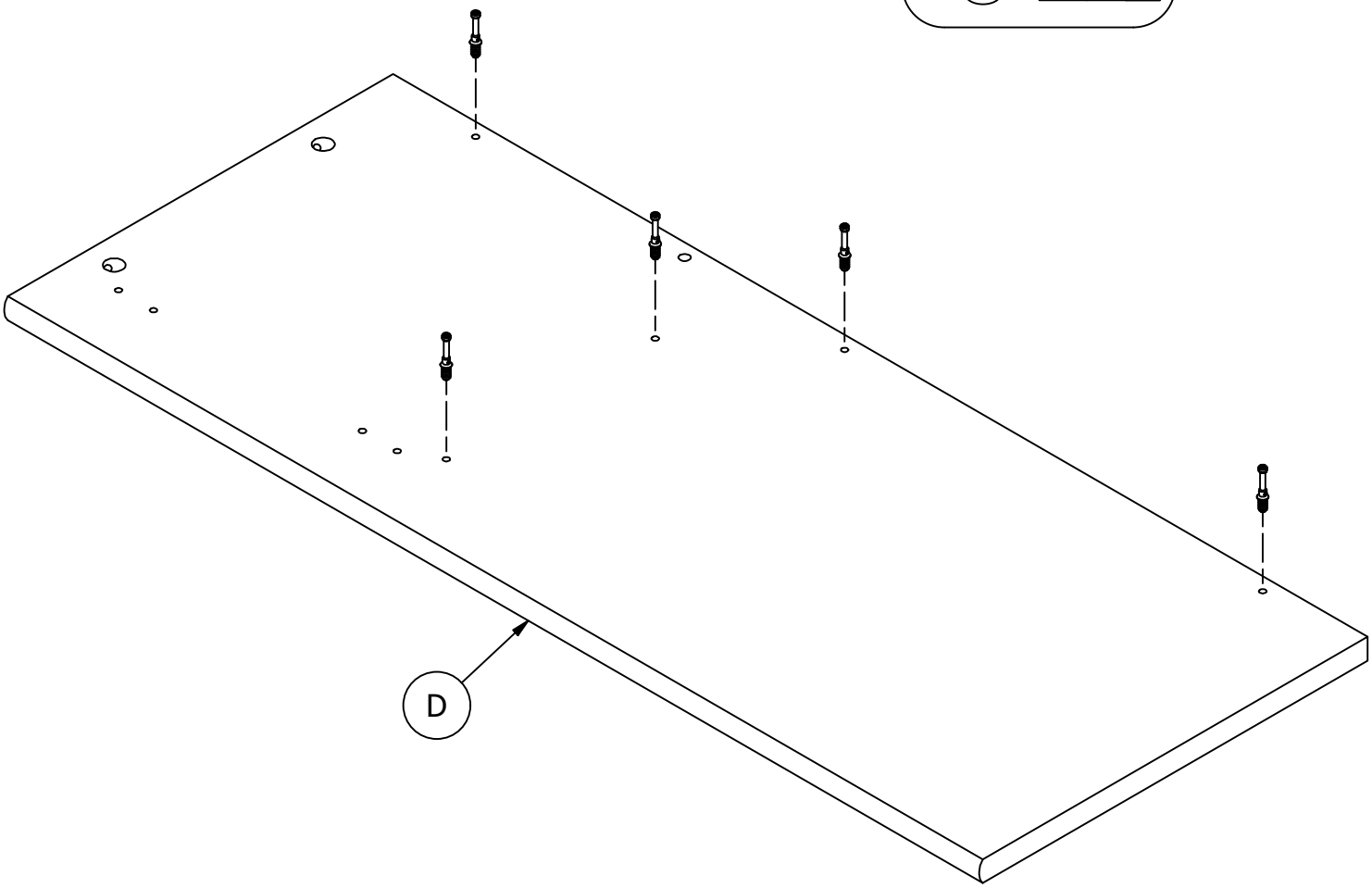

STEP-ÉTAPE-PASO
11

Assemble - Assembler - Assemblar

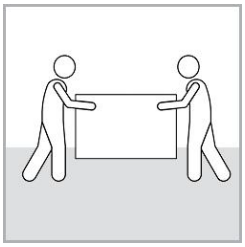

Team Lift
Esfuerzo de equipo
Effort d'équipe

[2]

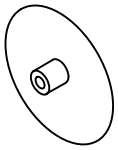

[2]

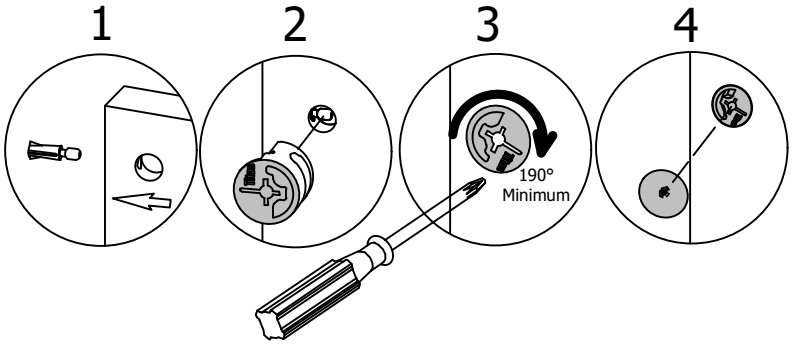

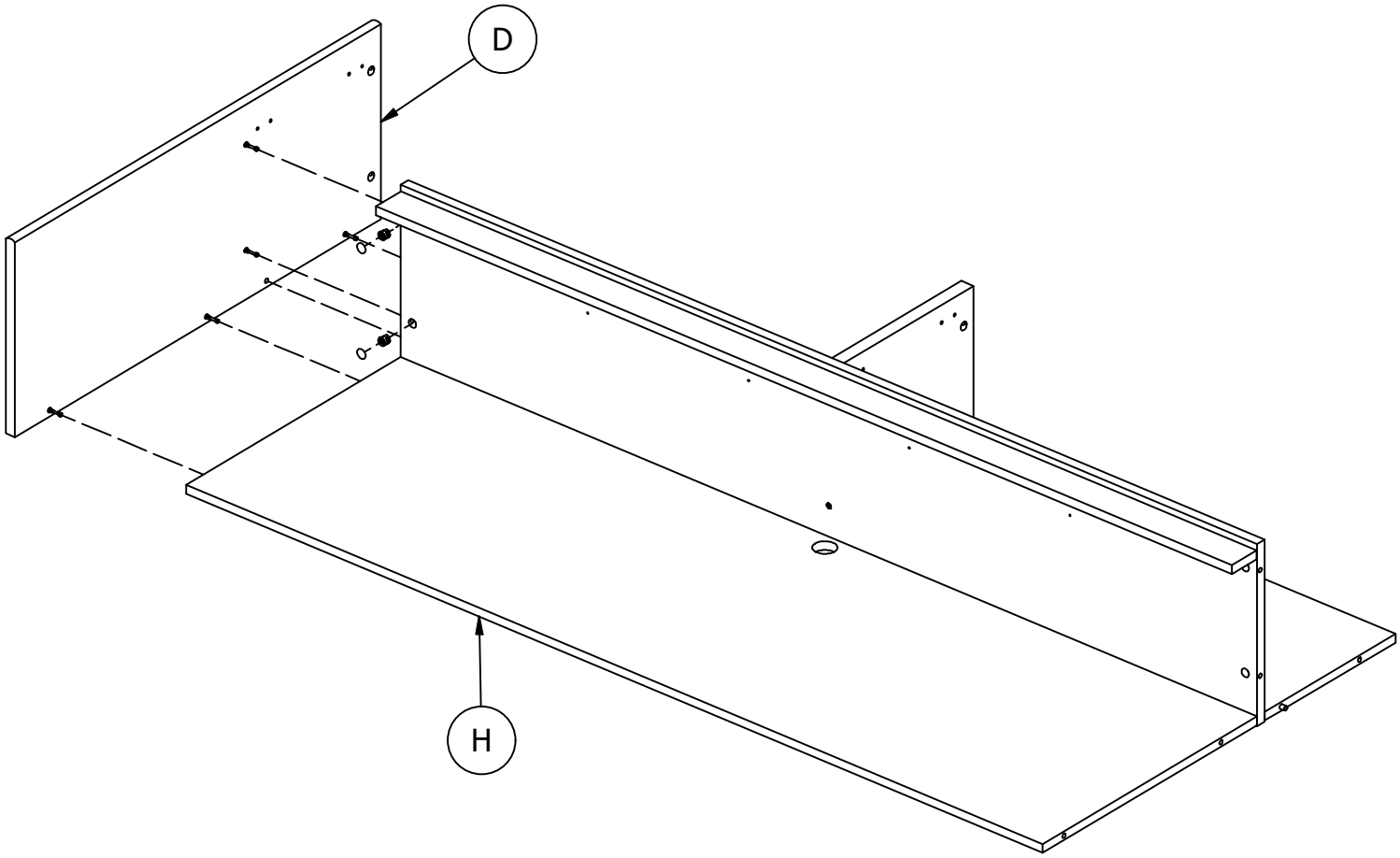

STEP-ÉTAPE-PASO

12

Prepare - Préparer - Preparar

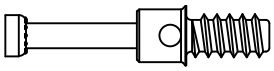

[5]

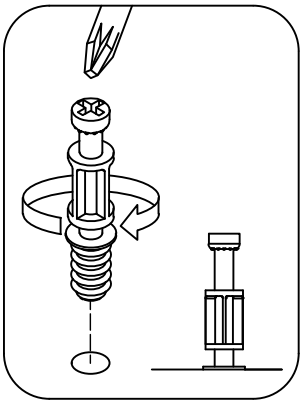

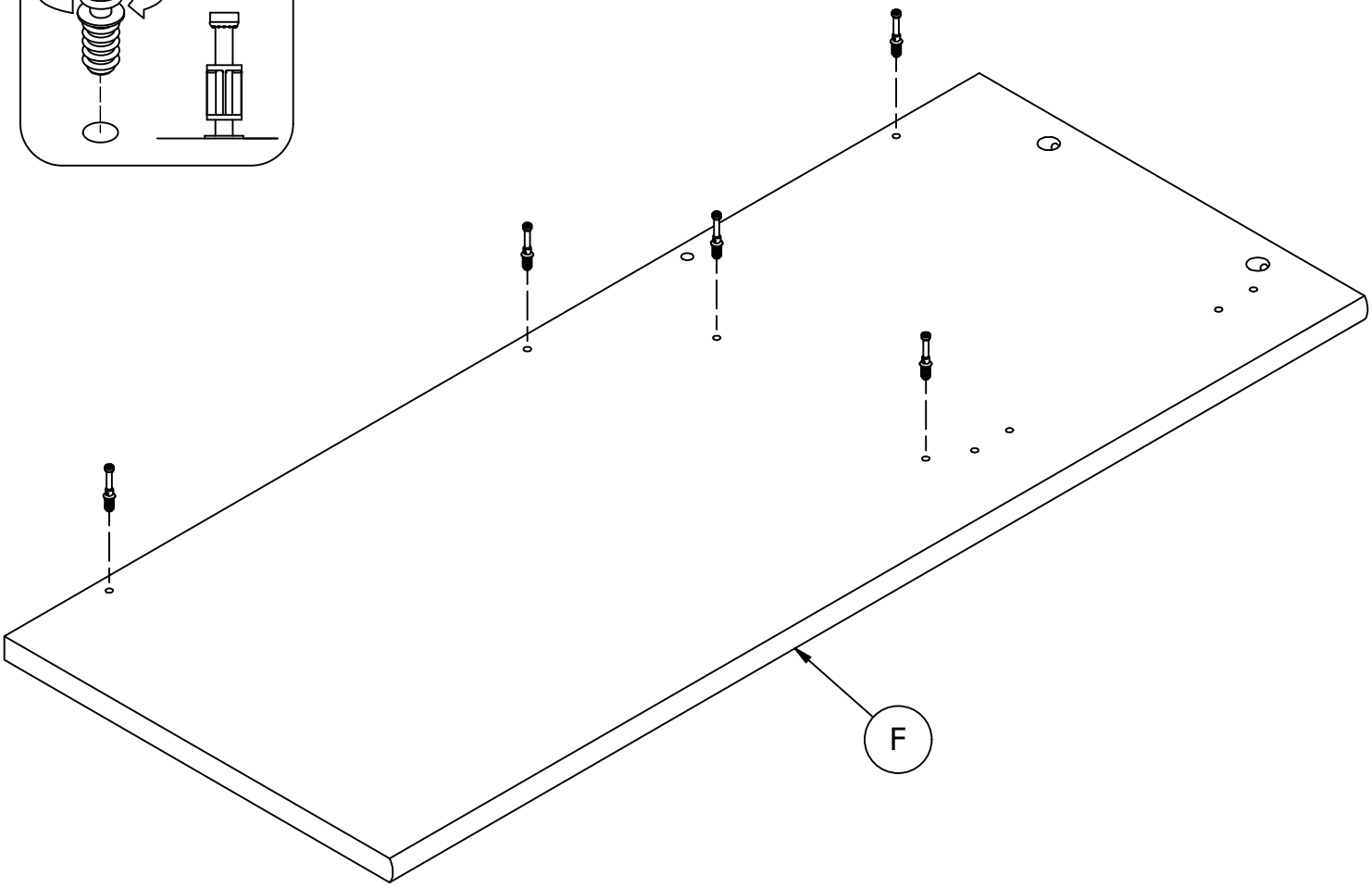

STEP-ÉTAPE-PASO
13

Assemble - Assembler - Assemblar

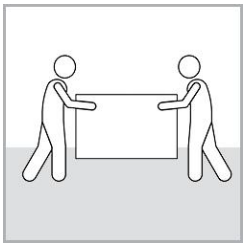

Team Lift
Esfuerzo de equipo
Effort d'équipe

[2]

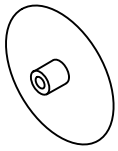

[2]

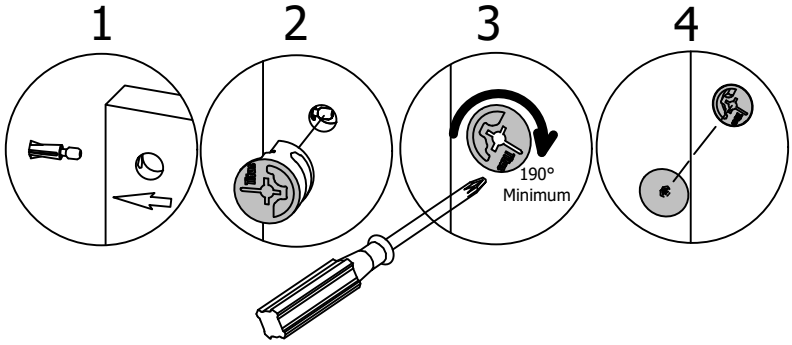

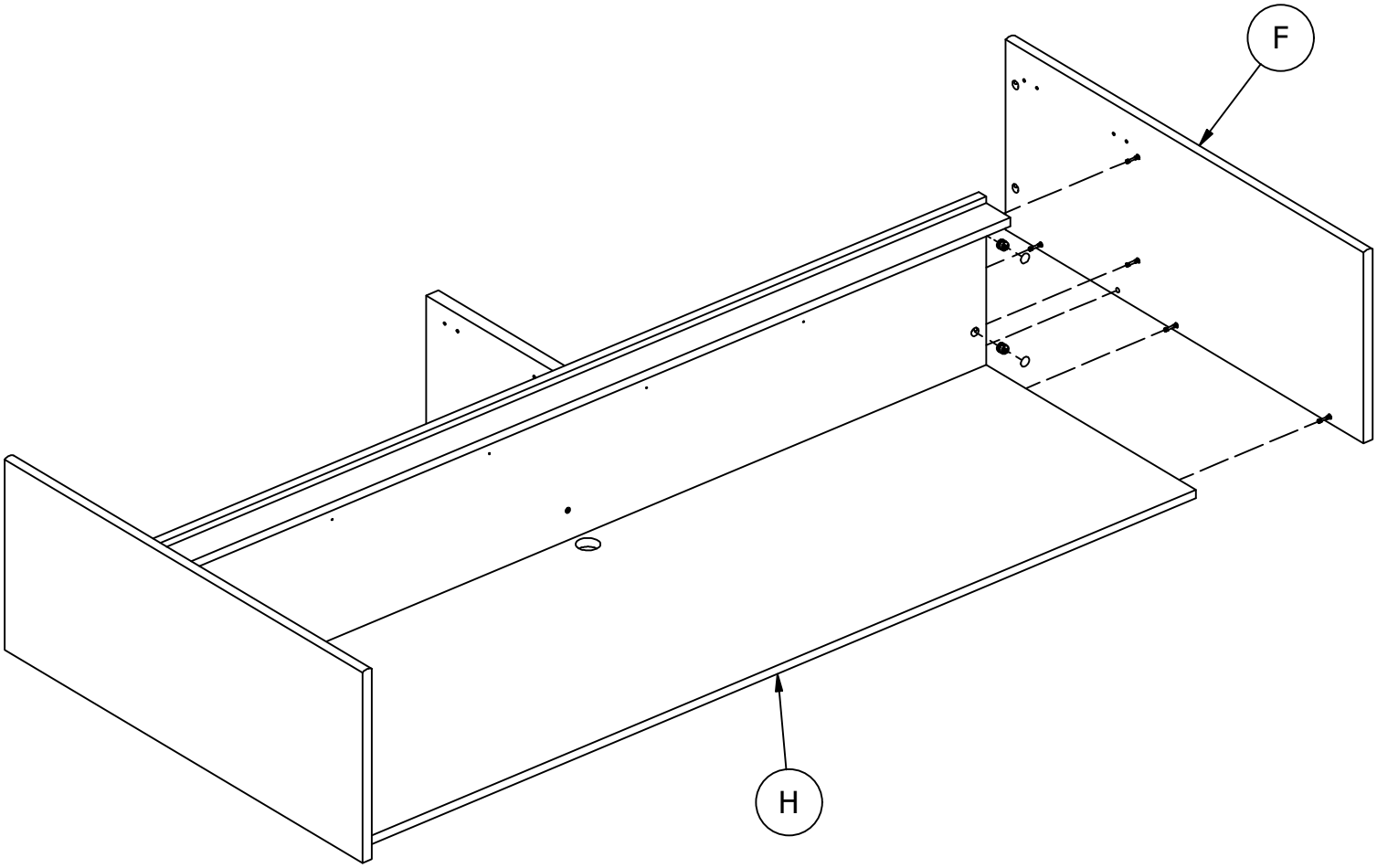

STEP-ÉTAPE-PASO

14

Prepare - Préparer - Preparar

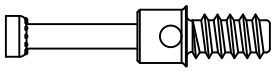

[8]

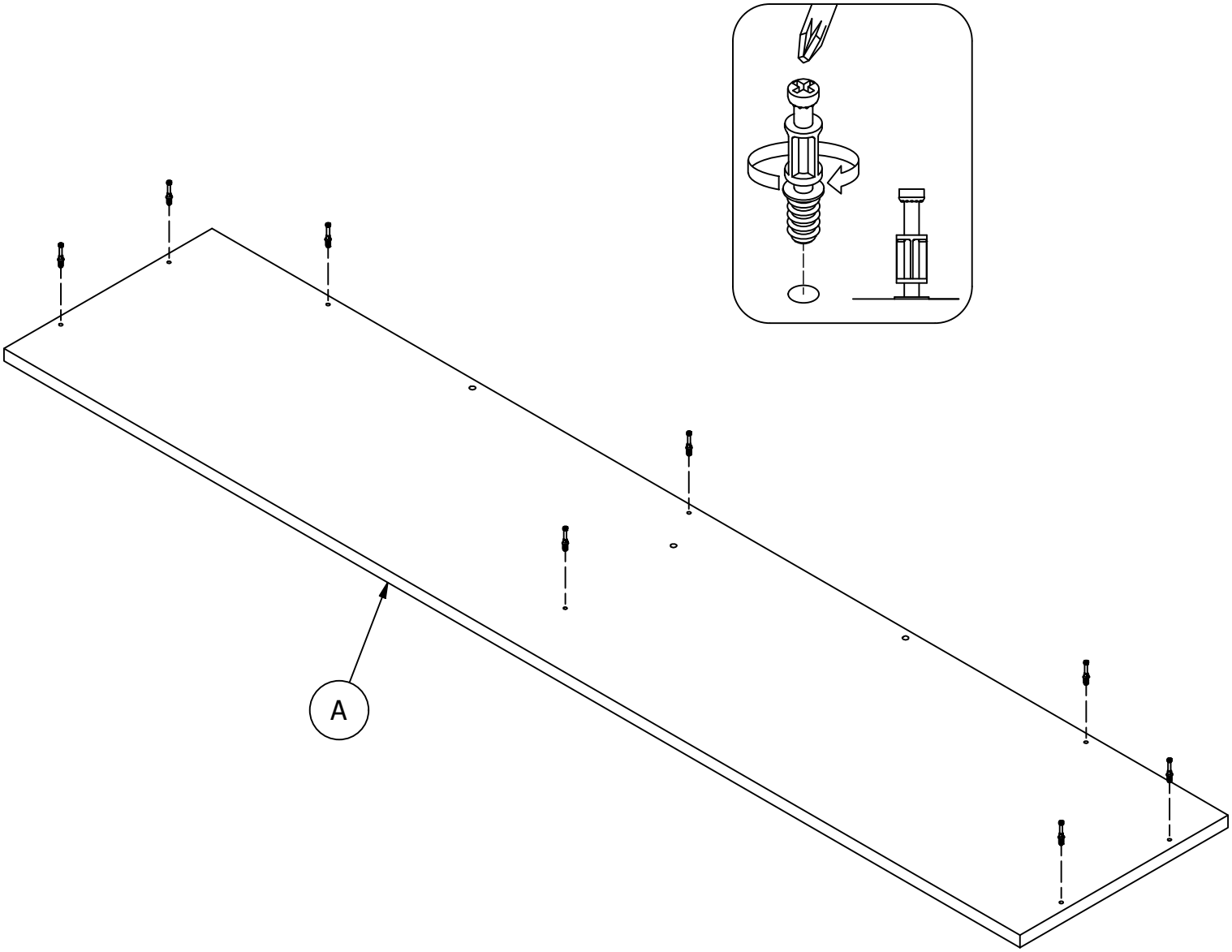

STEP-ÉTAPE-PASO
15

Assemble - Assembler - Assemblar

Team Lift
Esfuerzo de equipo
Effort d'équipe

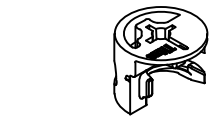

[5]

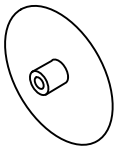

[5]

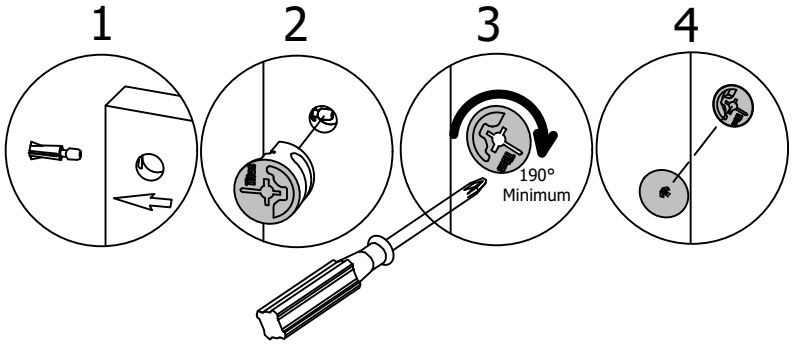

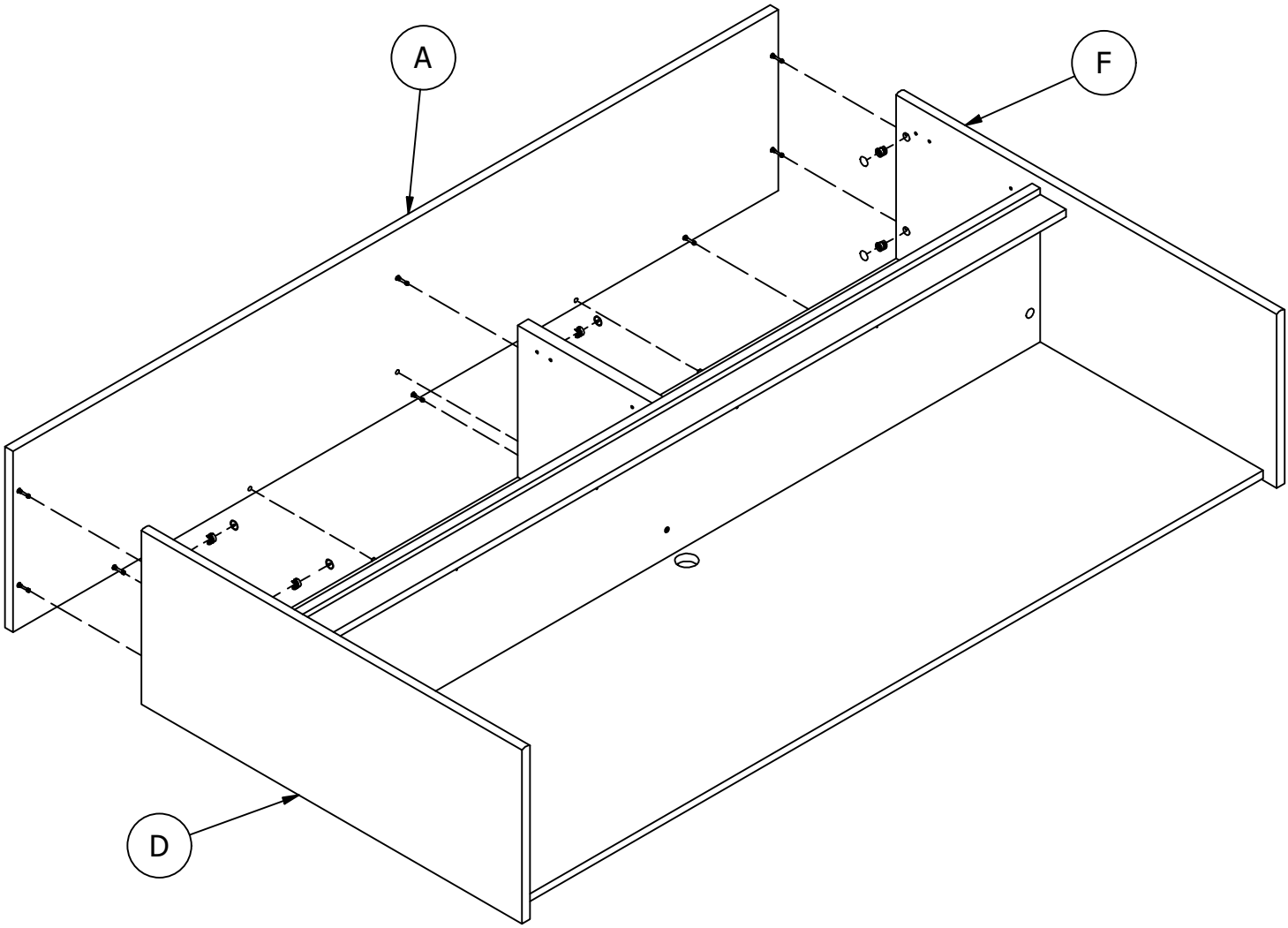

STEP-ÉTAPE-PASO
16

Install - Installer - Instalar

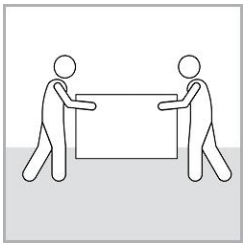

Team Lift
Esfuerzo de equipo
Effort d'équipe

[12]

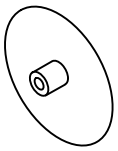

[12]

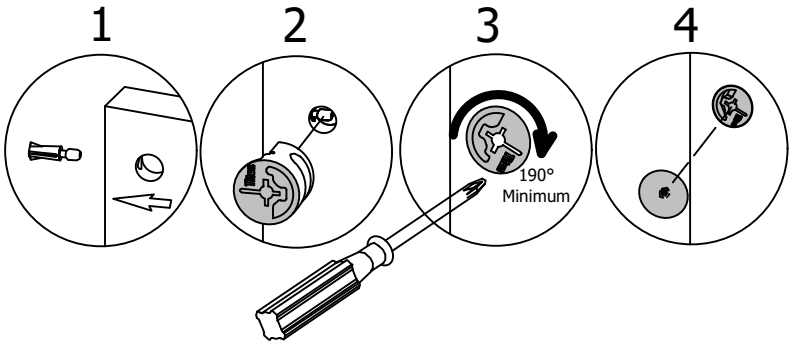

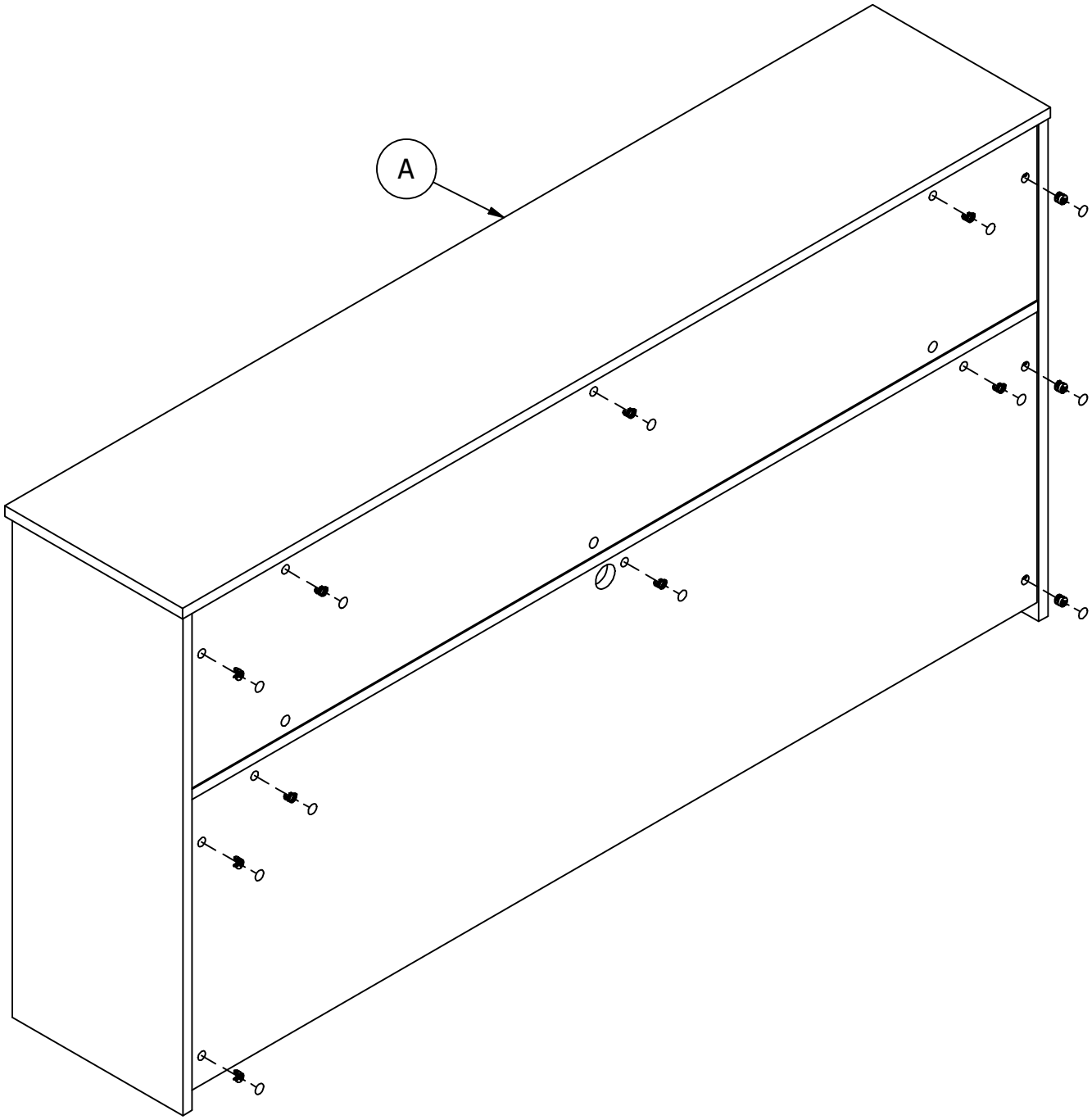

STEP-ÉTAPE-PASO
17

Prepare - Préparer - Preparar

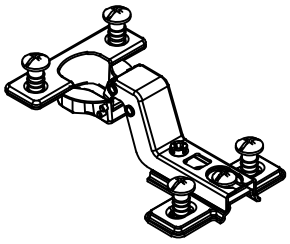

[4]

2X

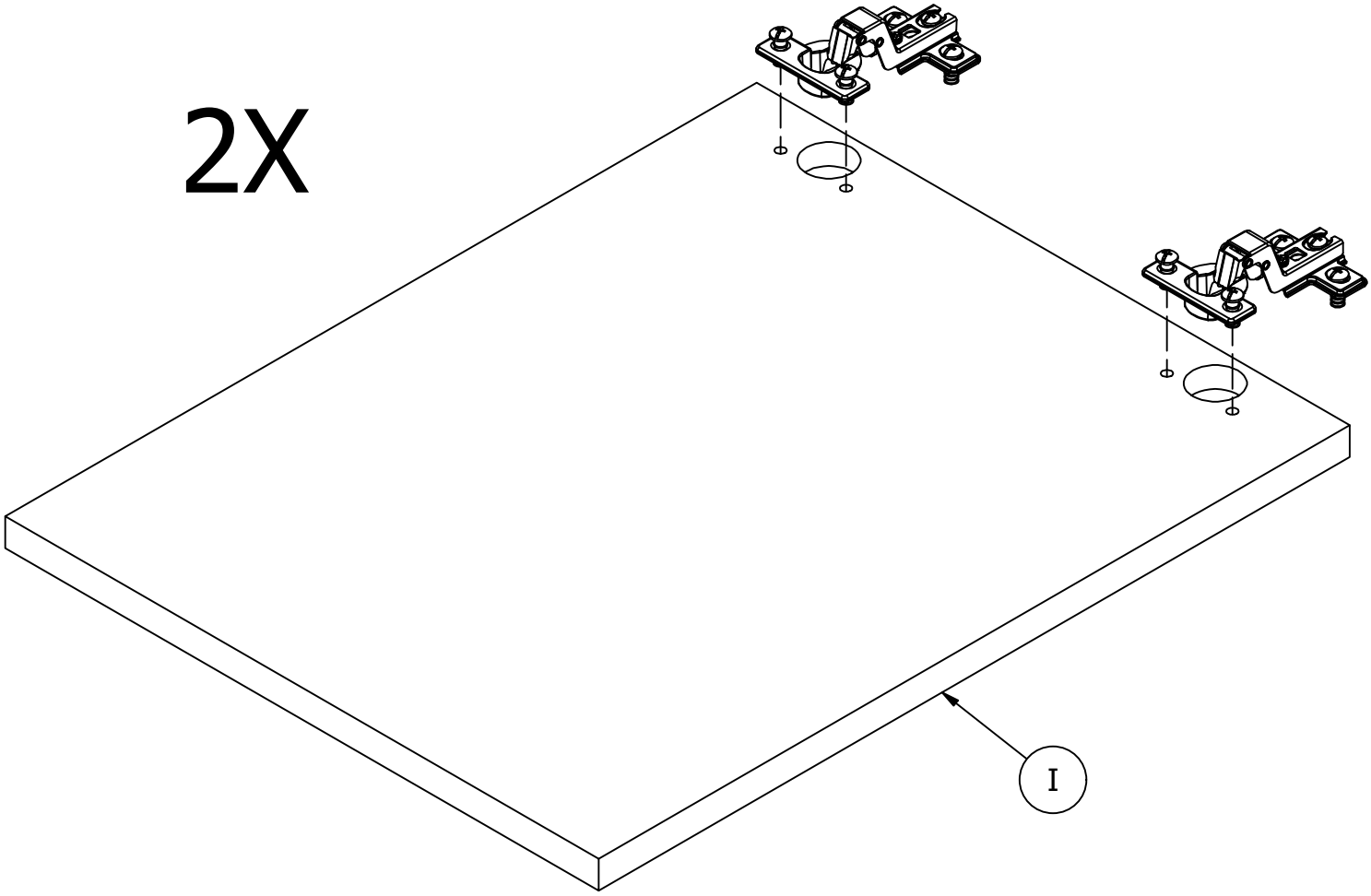

Install - Installer - Instalar

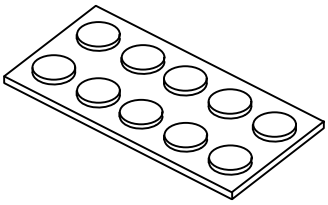

[1]

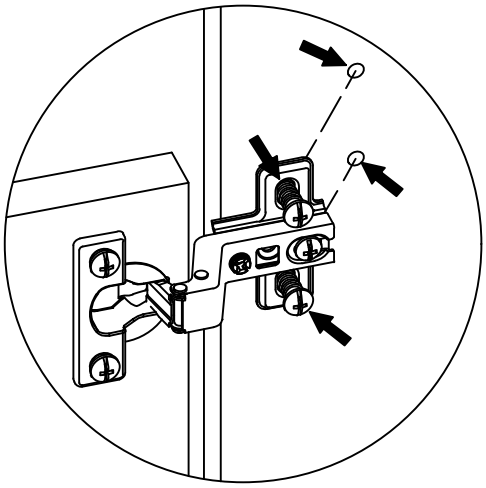

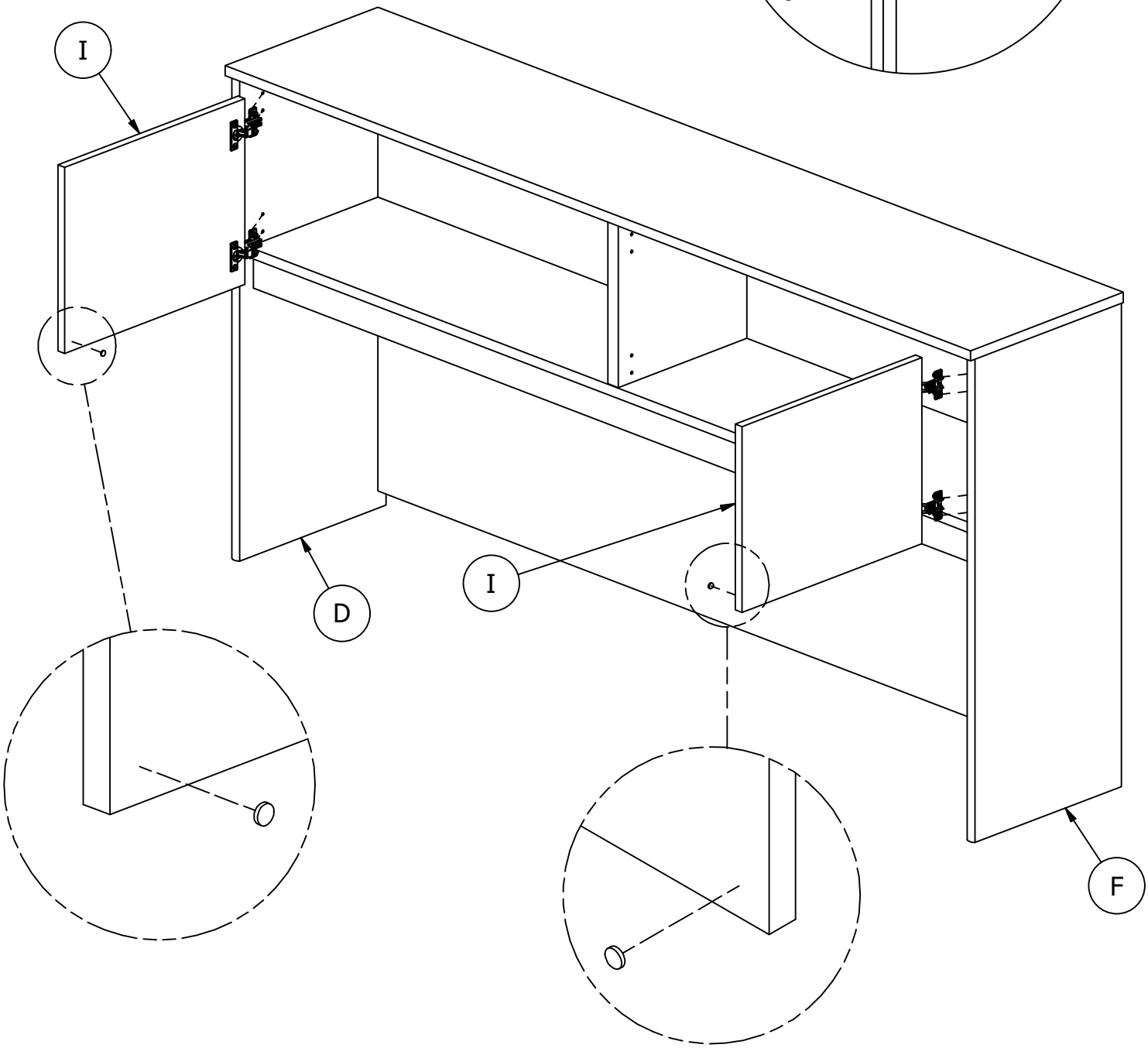

STEP-ÉTAPE-PASO

19

Prepare - Préparer - Preparar

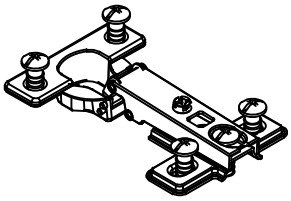

[4]

2X

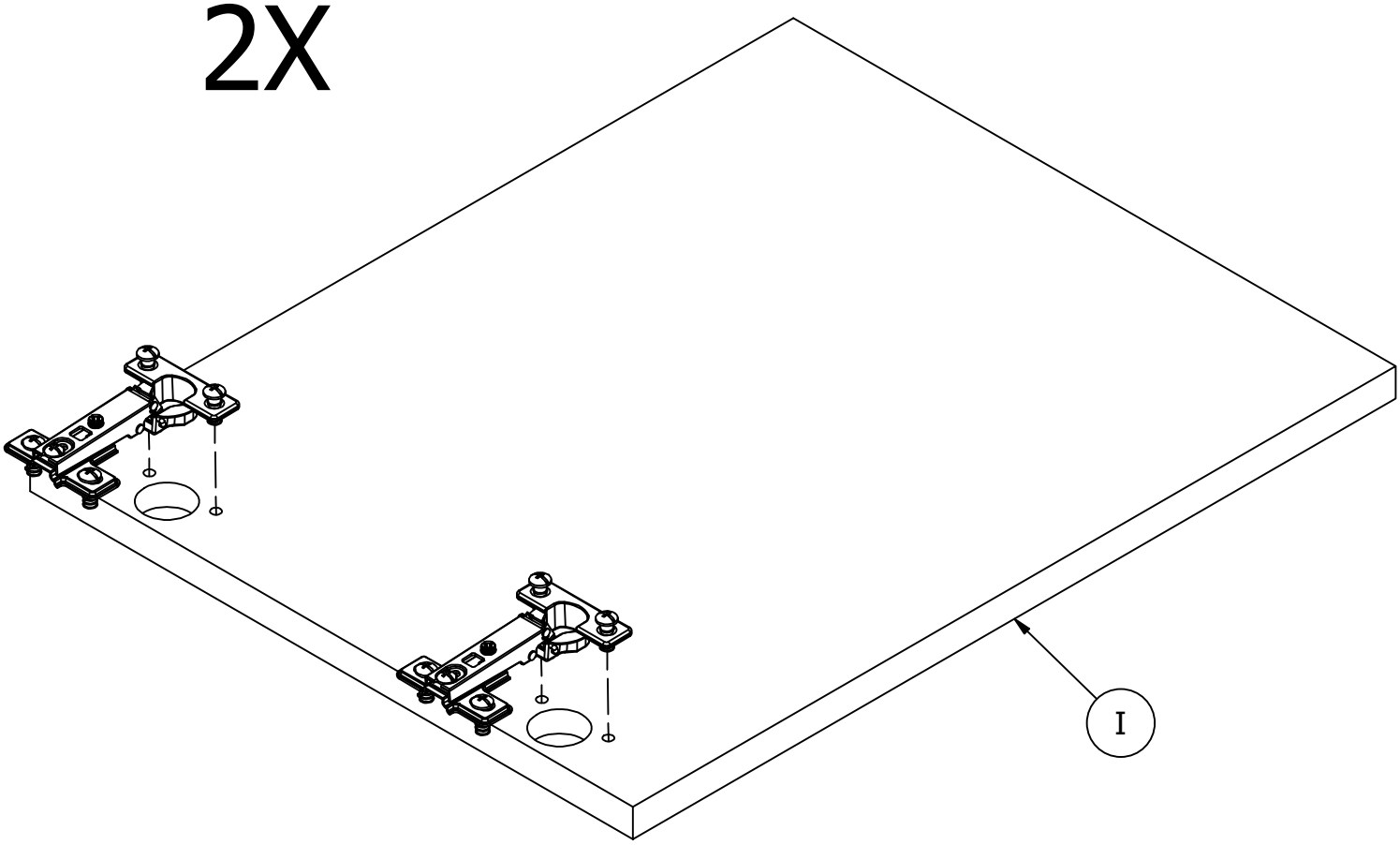

Install - Installer - Instalar

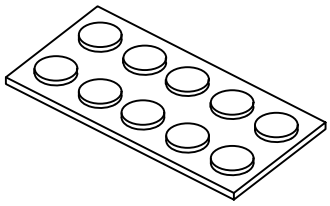

[1]

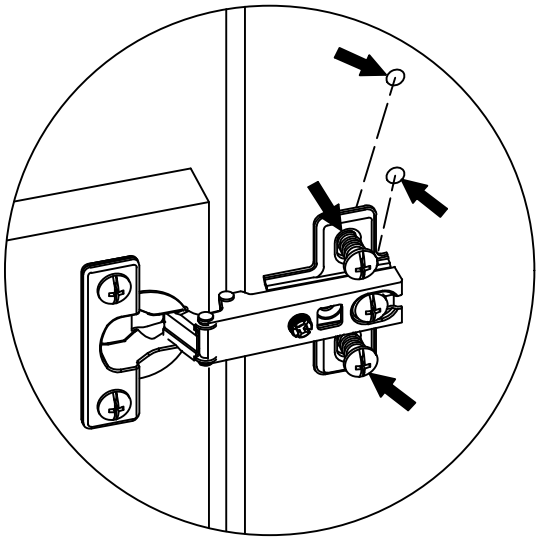

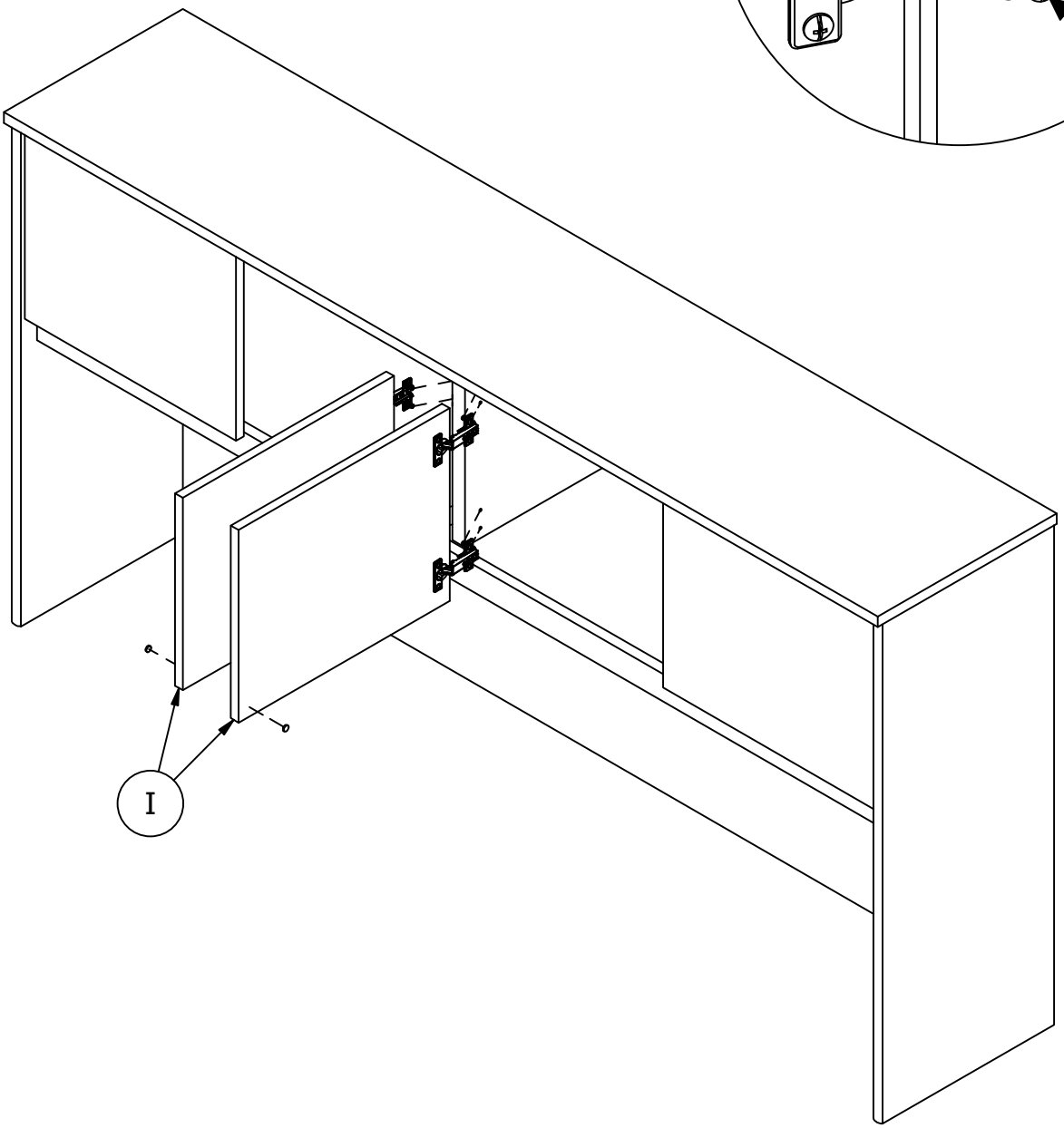

STEP-ÉTAPE-PASO

21

Attach - Fije - Fixer

Team Lift
Esfuerzo de equipo
Effort d'équipe

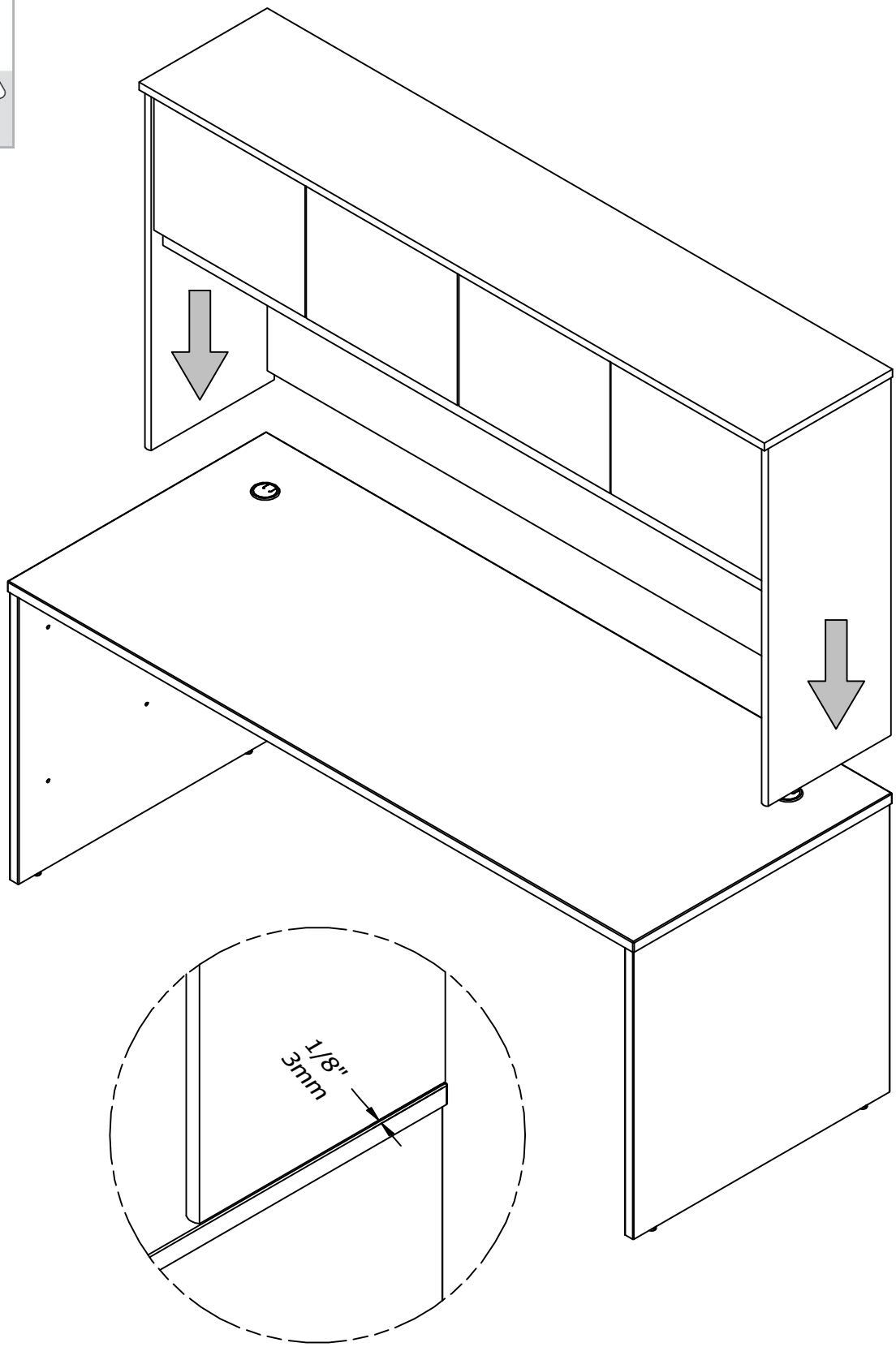

Install - Installer - Instalar

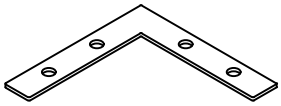

[2]

[8]

#10 x 1"

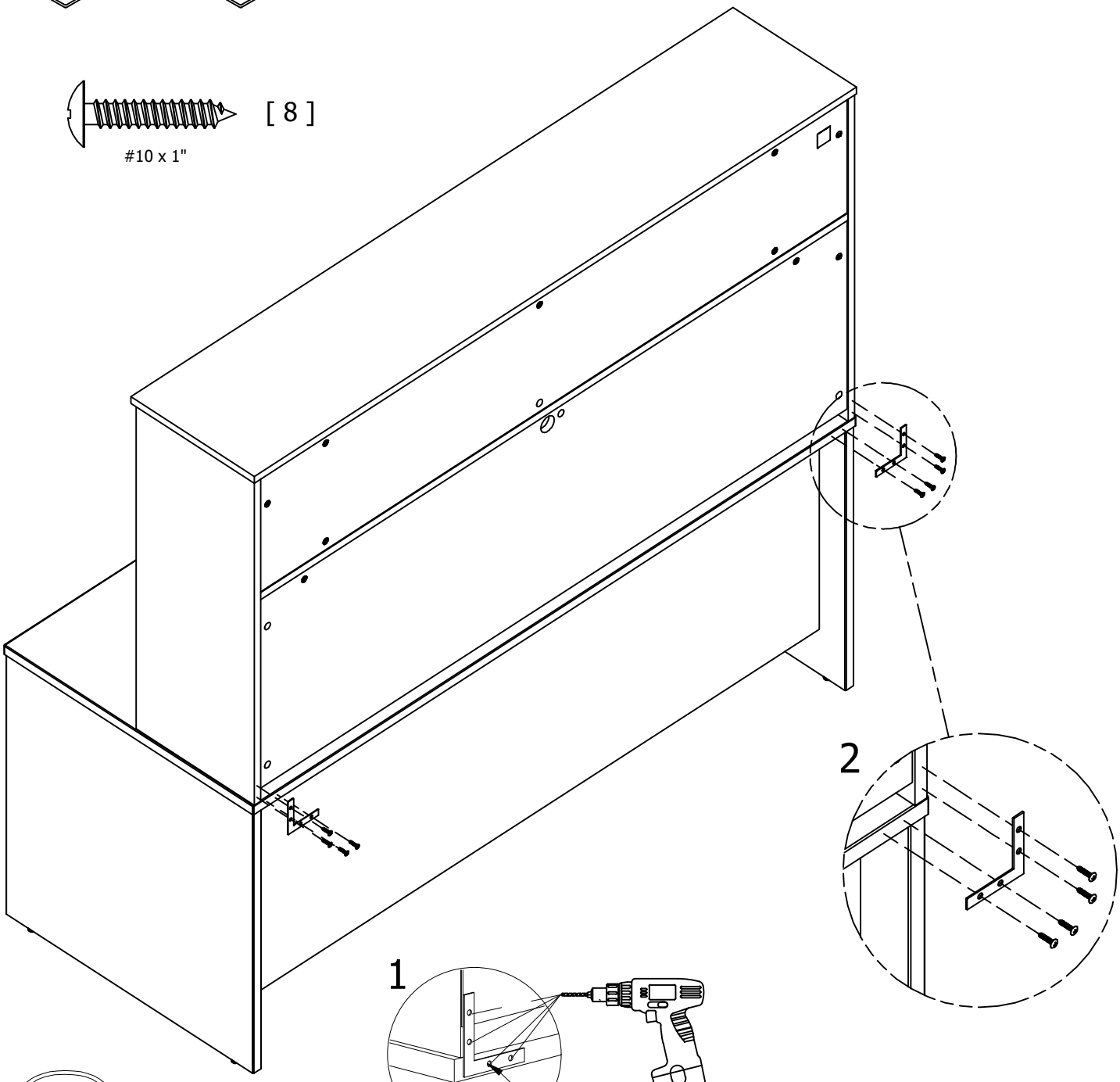

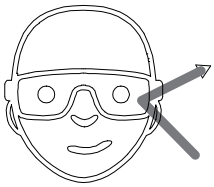

Safety glasses
Gafas de seguridad
Lunettes de protection

Drill (8) 1/8" holes 3/4" deep.
Perfore (8) agujeros de 3mm a 19mm de profundido.
Percer (8) trous de 3mm de diamètre et 19mm de profondeur.

Install - Installer - Instalar

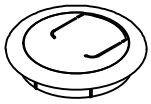

[1]

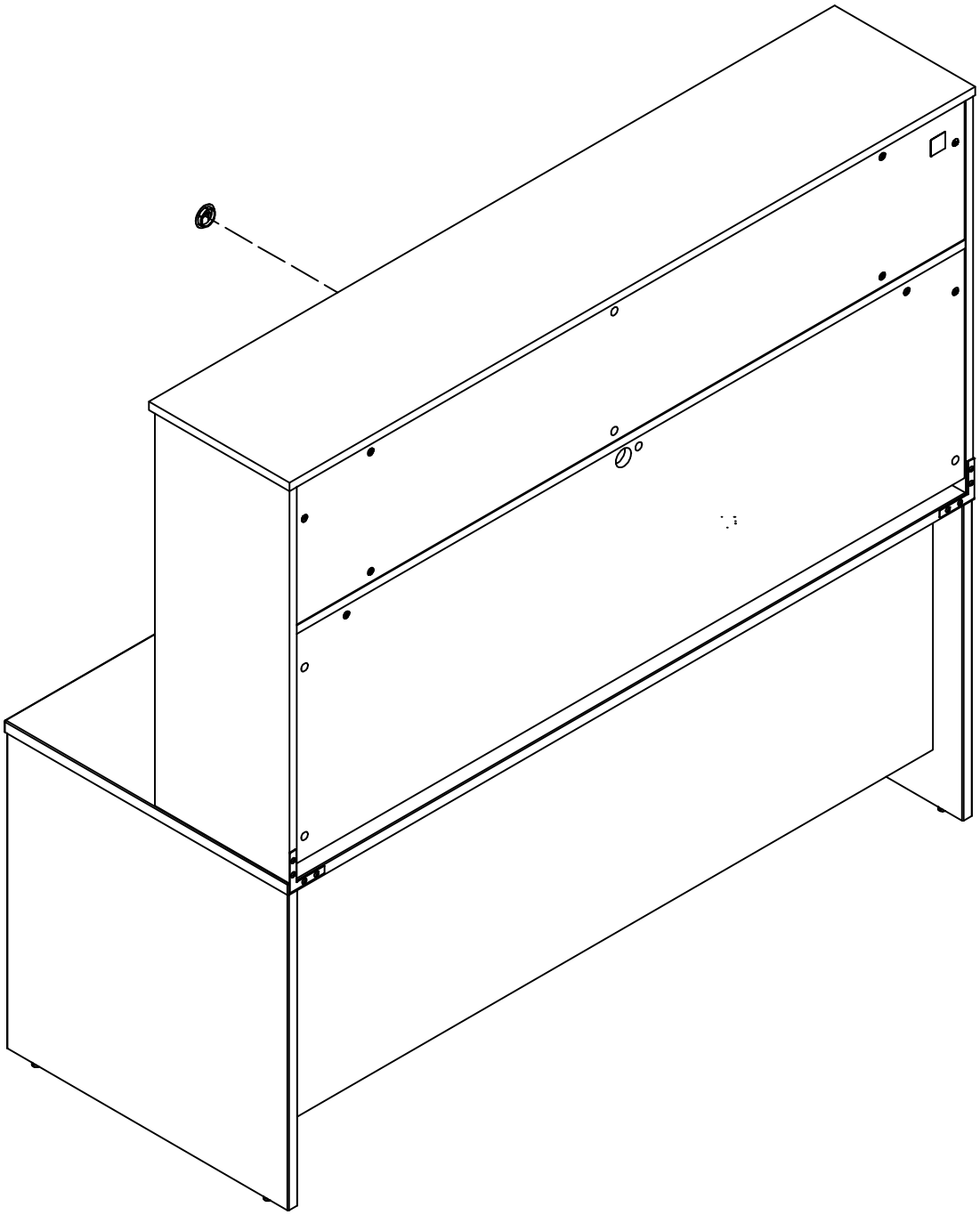

STEP-ÉTAPE-PASO
24

Attach - Fije - Fixer

Secure unit to the wall with a tip-over restraint.
Unidad de seguro a la pared con un sistema de retención de un vuelco.
Fixer l'unité au mur avec un dispositif de retenue renversement.

1. Place unit in desired location.
2. Locate wall stud nearest unit center. **FIG A**
3. On wall, mark center of stud location 1" below top of unit. **FIG A**
4. If a wall stud cannot be located mark hollow wall at unit center. **FIG A**
5. On back of unit, mark corresponding location 3/8" below top of unit. **FIG B**

1. Coloque la unidad en el lugar deseado.
2. Localice pie derecho de pared centro de unidad más próxima.
3. En la pared del, marque el centro de la ubicación del montante 1 "abajo la parte superior de la unidad.
4. Si un poste de la pared no se puede localizar marcar pared hueca en el centro de la unidad.
5. En el dorso de la unidad, marque la ubicación 3/8 correspondiente abajo la parte superior de la unidad.

1. Placez l'unité à l'endroit désiré.
2. Localiser centre d'unité la plus proche de la paroi Stud.
3. Sur le mur, centre de emplacement du montant 1 "ci-dessous dessus de l'appareil de la marque.
4. Si un montant de mur ne peut pas être situé marquer mur creux au centre de l'unité.
5. Le dos de l'appareil, marquer l'emplacement 3/8 correspondant ci-dessous dessus de l'appareil.

FIG A

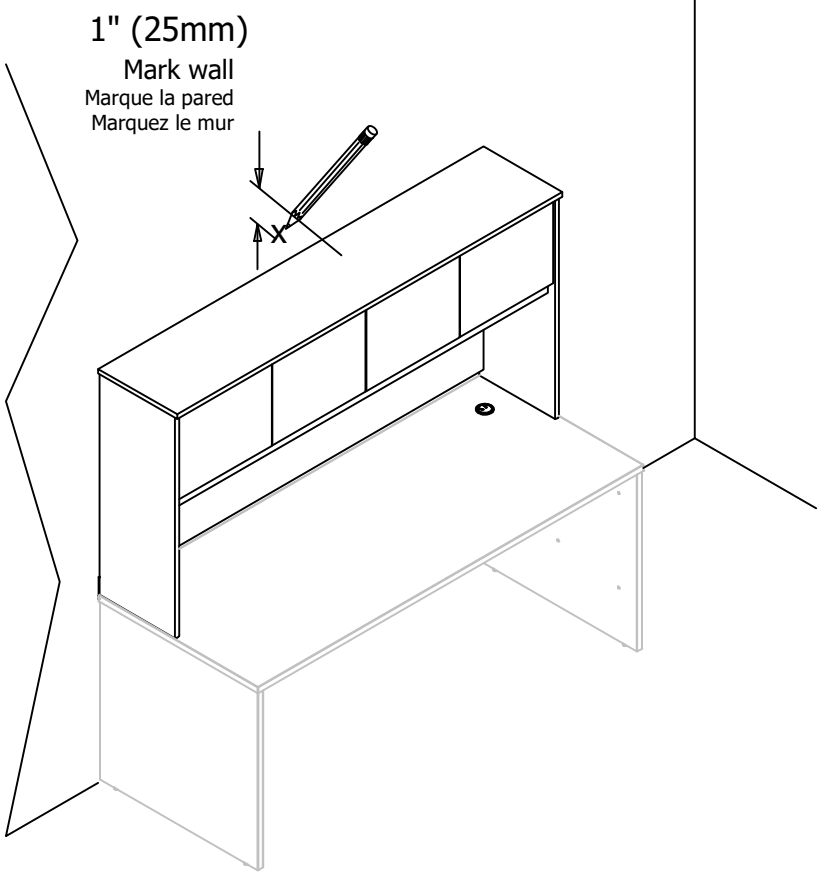

FIG B

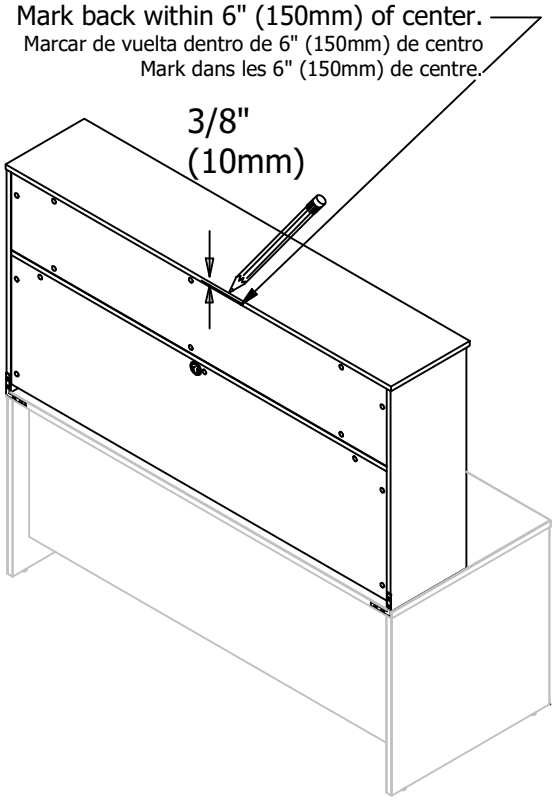

Attach - Fije - Fixer

WALL STUD ATTACHMENT

FIJACIÓN A LOS MONTANTES DE LA PARED
FIXATION AUX MONTANTS DU MUR

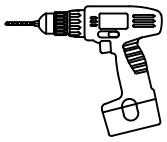

Drill 1/8" hole 2" deep at mark on wall.
Taladro 1/8 "agujero 2" de profundidad en la marca en la pared.
Percer 1/8 "trou de 2" de profondeur à la marque sur le mur.

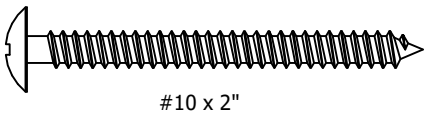

#10 x 2"

[1]

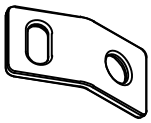

[1]

Connecting Plate

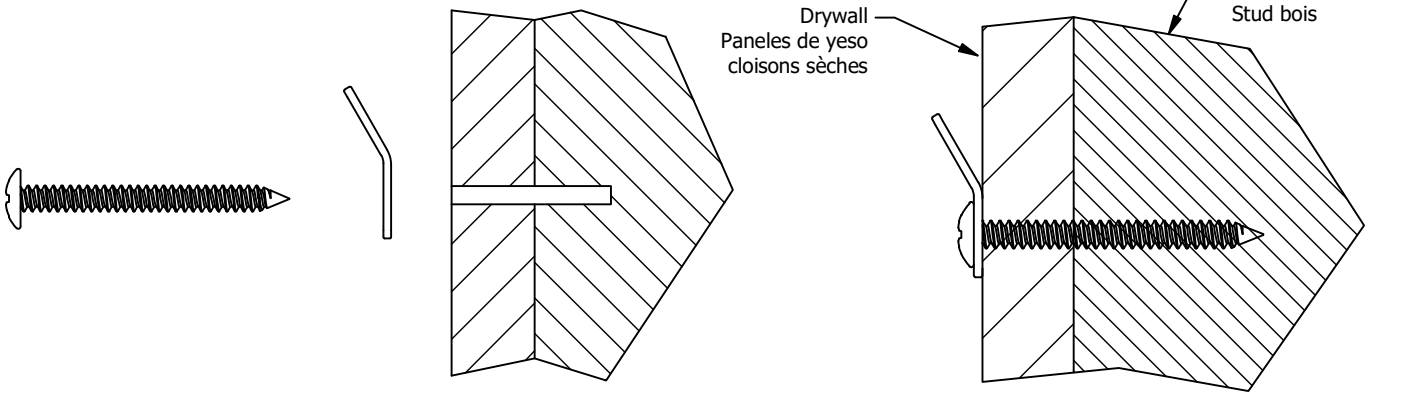

HOLLOW WALL ATTACHMENT

FIJACIÓN A PARED HUECA
FIXATION SUR MUR CREUX

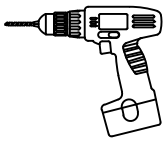

Drill 1/2" hole 1" deep at mark on wall.
Taladro 1/2 "agujero 1" de profundidad en la marca en la pared.
Percer 1/2 "trou de 1" de profondeur à la marque sur le mur.

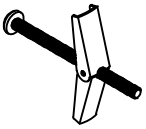

Toggle Bolt

[1]

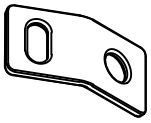

[1]

Connecting Plate

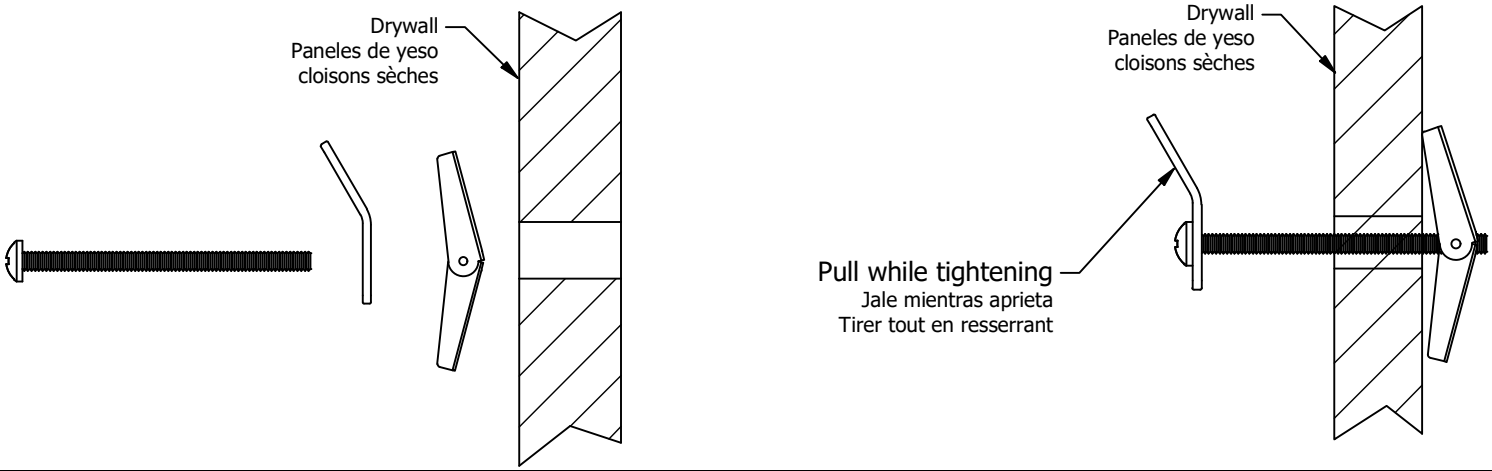

Attach - Fije - Fixer

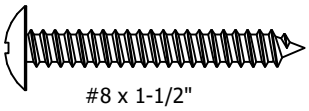

#8 x 1-1/2"

[1]

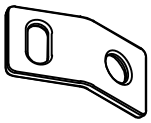

[1]

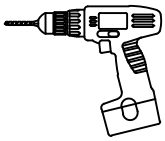

Drill 1/8" hole 1" deep at mark on unit.
Taladro 1/8 "agujero de 1" de profundidad en la marca de la unidad.
Percer 1/8 "trou 1" de profondeur à la marque sur l'unité.

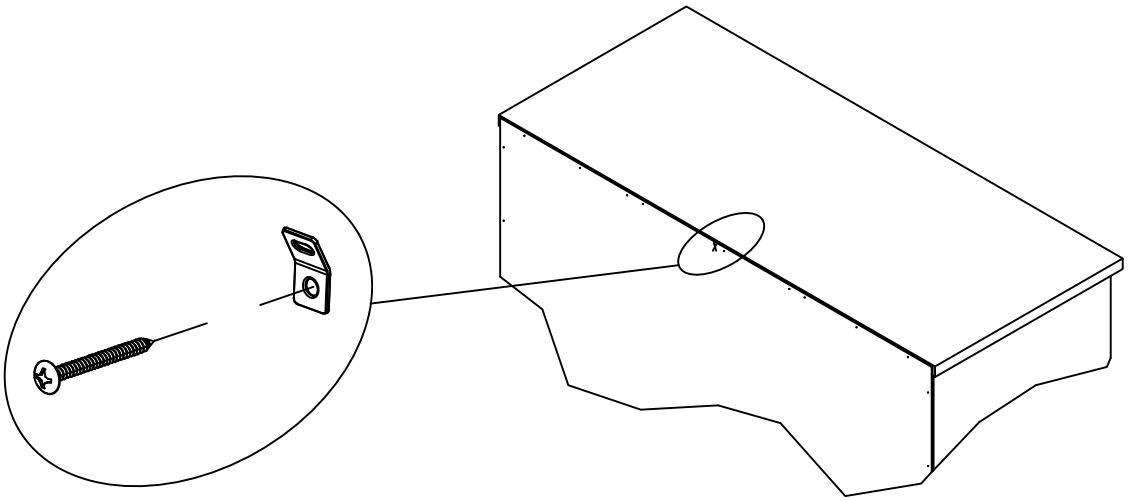

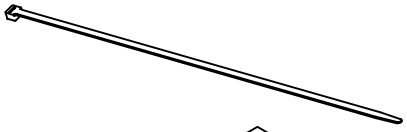

[1]

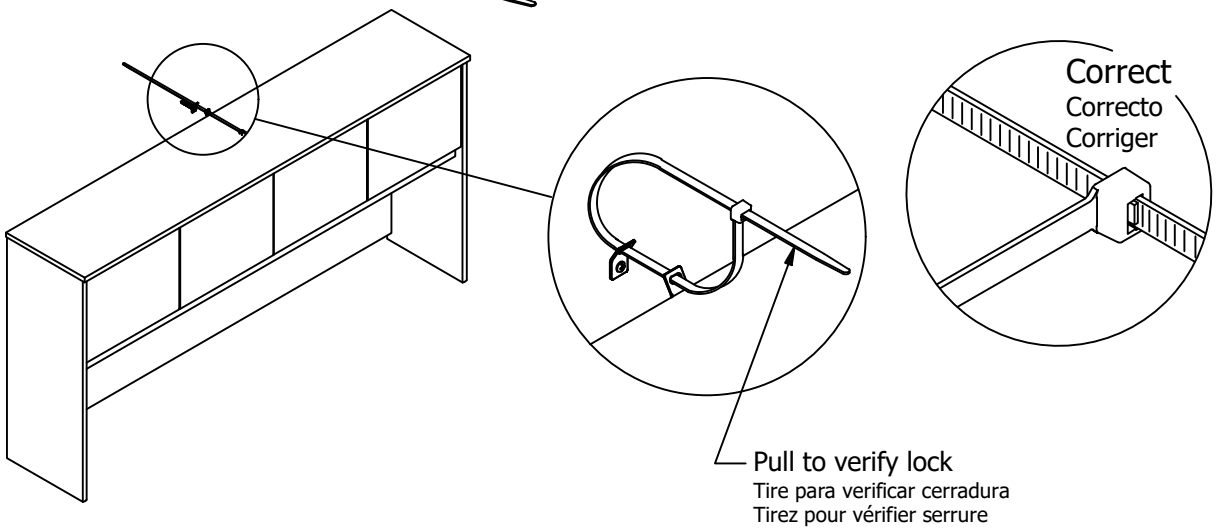

Use replacement cable tie with minimum breaking strength of 120lbs.
Utilice reemplazo empate Cable con resistencia a la rotura mínima de 120 libras.
Utilisez remplacement Attache de câble avec une force de rupture minimale de 120 lbs.

Adjust - Ajuster - Ajustar

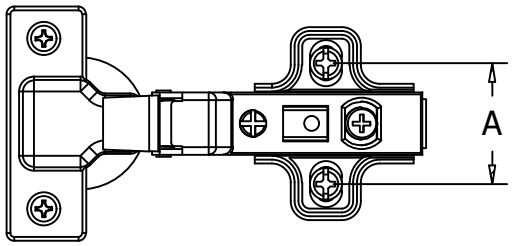

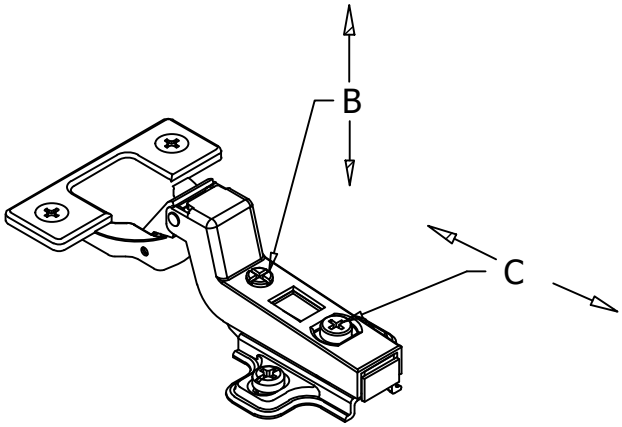

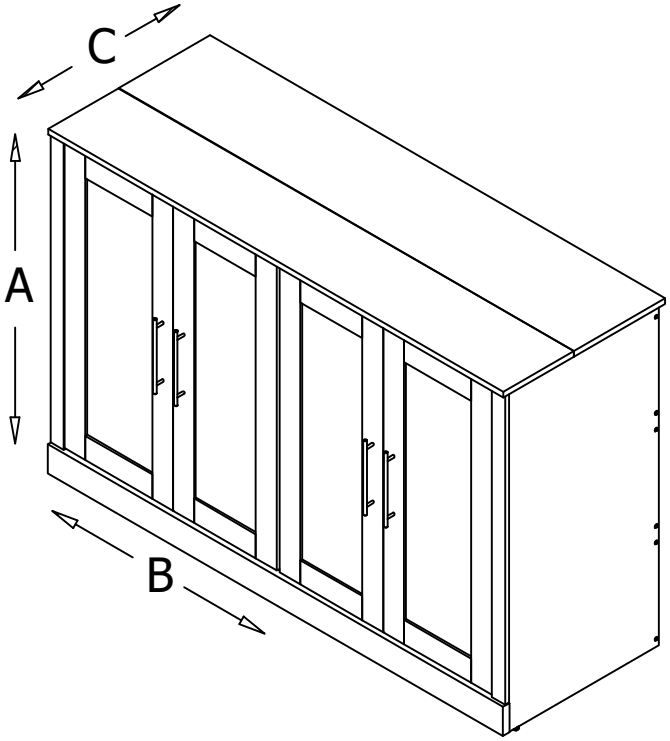

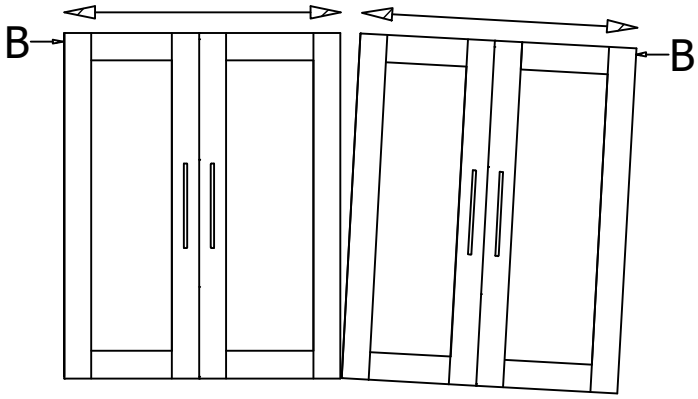

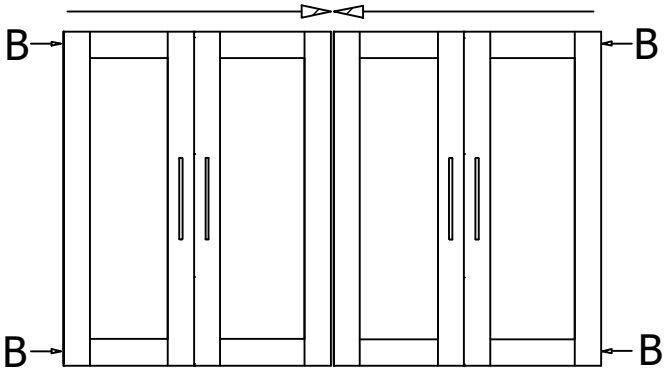

Load - Charge - Carga

Gently clean surfaces with a damp cloth.
Limpie suavemente las superficies con una esponja húmeda.
Nettoyer délicatement les surfaces à l'aide d'une éponge humide.

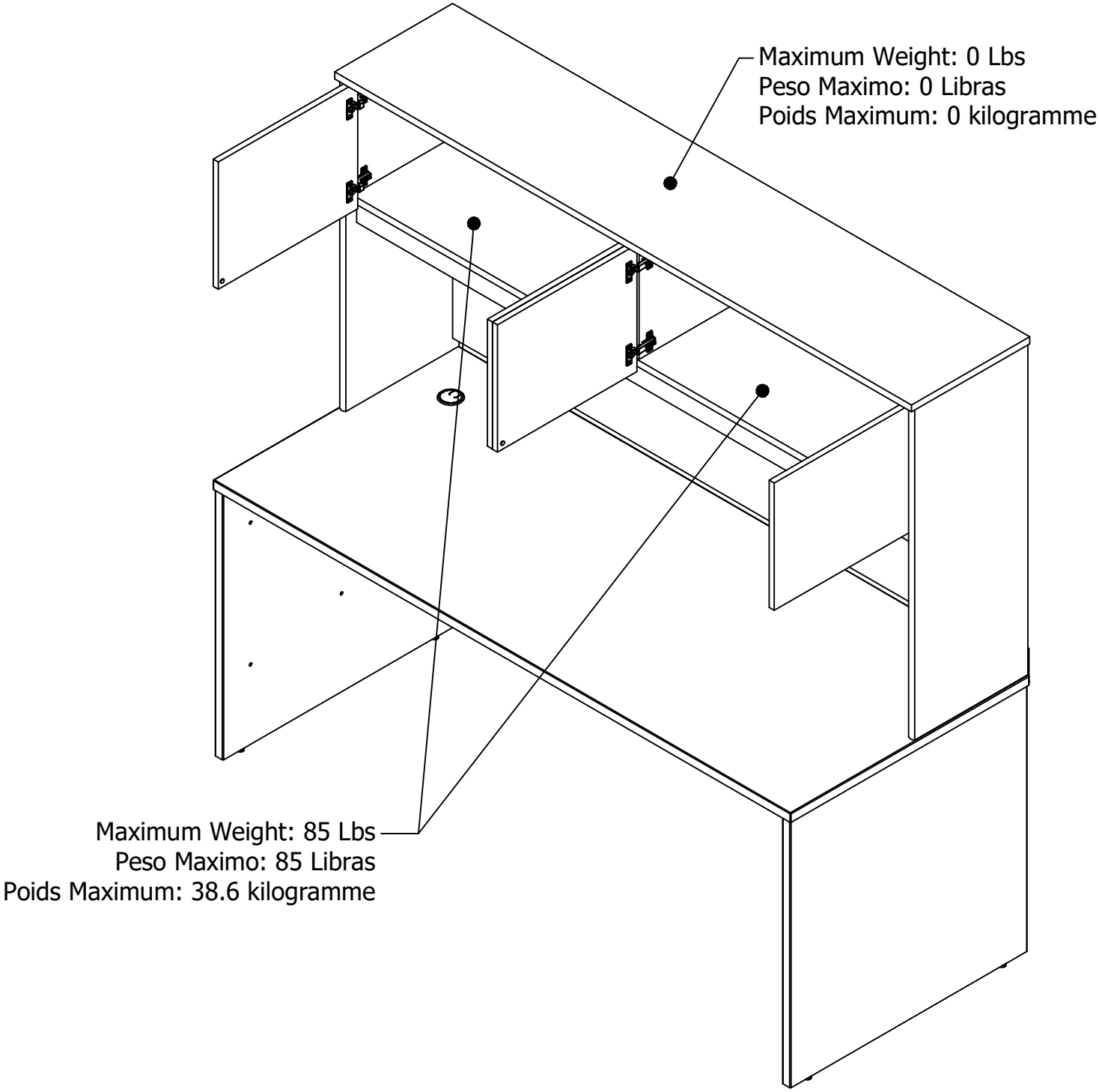

Quality and Safety Guidelines

These guidelines apply across the catalog — seating, tables and desks, storage and shelving, folding and stacking products, classroom and outdoor furniture, and other case goods. Please review this information in addition to the specific assembly instructions included with your product.

BEFORE YOU ASSEMBLE

- Unpack all parts and hardware and check them against the parts list before starting assembly.
- Read all instructions and warnings completely before beginning; assemble on a soft, protected surface.
- Use only the tools and hardware specified in the instructions; do not substitute sizes.
- Tighten all hardware securely but do not overtighten, and get a second person to help with large or heavy pieces.

GENERAL SAFETY & CARE

- Use this product only as intended by the manufacturer; this product is intended for indoor use unless labeled for outdoor/patio use.
- Follow all posted weight capacity limits and usage guidelines provided with the product.
- Do not use the product if any instability, damage, or unusual wear is detected; discontinue use immediately.
- Regularly inspect for loose hardware, worn components, cracks, or other signs of deterioration, and tighten hardware as needed; replace damaged or worn parts only with manufacturer-approved replacement parts.
- Keep children supervised around furniture and any moving components.
- Wipe down surfaces regularly with a soft, clean, lint-free cloth; for most materials, a cloth lightly dampened with mild soap and water is sufficient.
- Avoid harsh chemicals, bleach, ammonia-based cleaners, solvents, and abrasive scrubbers, which can damage finishes, fabric, and hardware.
- Blot spills promptly rather than rubbing, and dry surfaces thoroughly after cleaning; avoid saturating any material with water.
- Keep products out of direct, prolonged sunlight and away from heat sources to help prevent fading, warping, or cracking over time.

STORAGE, SHELVING & MOVING FURNITURE

- Remove contents before moving storage furniture, cabinets, dressers, desks, or shelving units.
- Use proper lifting technique and adequate assistance when moving heavy items; do not drag, push, or pull furniture unless it is designed for such movement.
- Follow all anti-tip and wall-anchoring instructions when provided, especially for tall or top-heavy pieces.
- Keep fingers, hands, and other body parts clear of hinges, drawer slides, lift mechanisms, and folding or adjustable features.

SEATING, FOLDING & ADJUSTABLE PRODUCTS

- Sit fully and properly within the seat area; keep chairs stationary when sitting down or standing up, and do not use seating as a ladder or step stool.
- Do not lean excessively backward, forward, or sideways, as this may result in tipping or loss of balance.
- For rocking, reclining, swivel, or height-adjustable products, use only smooth, controlled movements and avoid excessive force.
- For folding and stacking chairs and tables, confirm legs and locking mechanisms are fully extended and secured before each use, and do not exceed recommended stack height limits.

Warranty & Product Support

For maintenance instructions, replacement parts, warranty information, or product support, please contact **Customer Experience** — Email: customerexperience@theubiquegroup.com | Phone: 866-552-2810.

Additional product information and warranty details can be found at www.theubiquegroup.com.

ASSEMBLY GUIDE
GUIDE D'ASSEMBLAGE
INSTRUCCIONES DE ENSAMBLAJE

FLASHWorkplace

16W 3 Drawer Mobile Pedestal
Classeur mobile à 3 tiroirs 16W
Pedestal móvil de 3 cajones 16An

196861152412
196861152429

⚠ **NOTE:**
If there are parts missing from your order or if your product was damaged during shipping, PLEASE CONTACT US DIRECTLY.

⚠ **NOTE :**
S'il vous manque des pièces ou si votre meuble a été endommagé pendant le transport, VEUILLEZ NOUS CONTACTER DIRECTEMENT.

⚠ **NOTA:**
En caso de piezas faltantes o si su producto fue dañado durante el envío, POR FAVOR CONTÁCTENOS DIRECTAMENTE.

KEEP MANUAL FOR FUTURE REFERENCE. | CONSERVEZ LE MANUEL POUR RÉFÉRENCE FUTURE. | GUARDE EL MANUAL PARA REFERENCIA FUTURA.

Customer Service Email: CustomerExperience@theubiquegroup.com | Phone: 866-552-2810

Parts - Pièces - Piezas

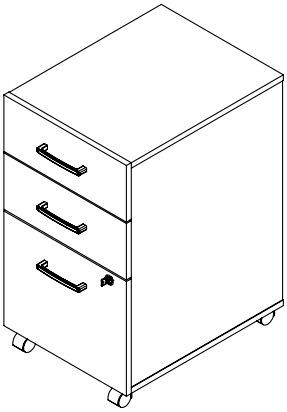

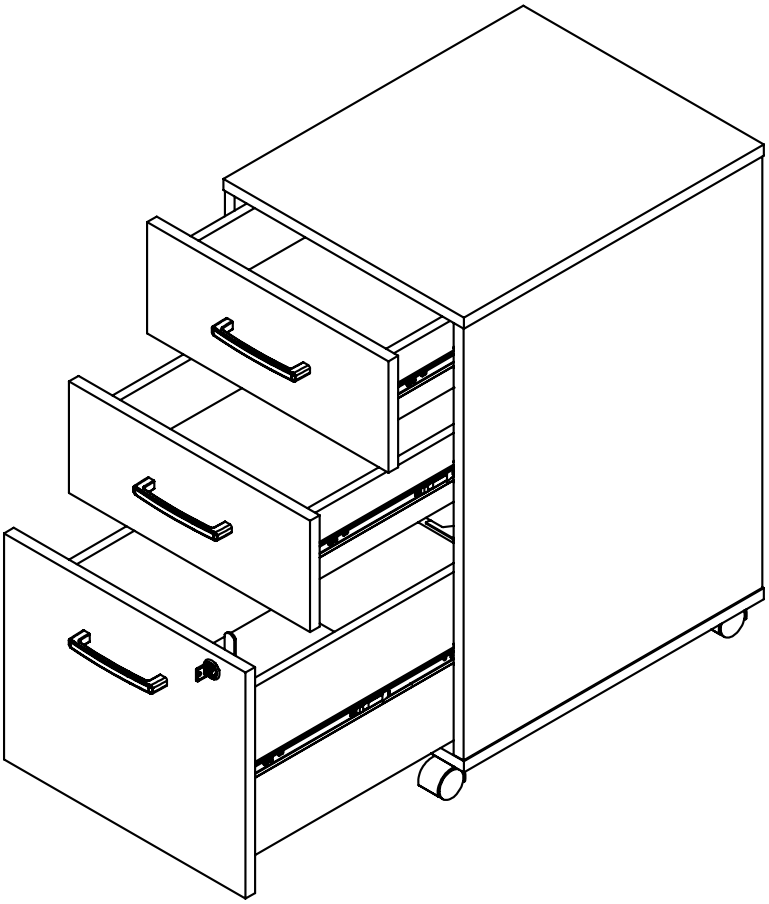

Fasteners - Fixations - Sujetadores

1

#8 x 1/2"

[16]

5

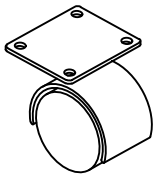

[2]

2

[3]

6

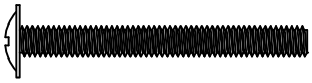

[6]

3

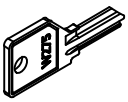

[1]

4

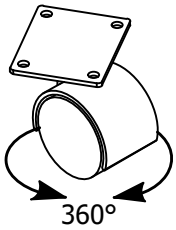

[2]

STEP-ÉTAPE-PASO

1

Install - Installer - Instalar

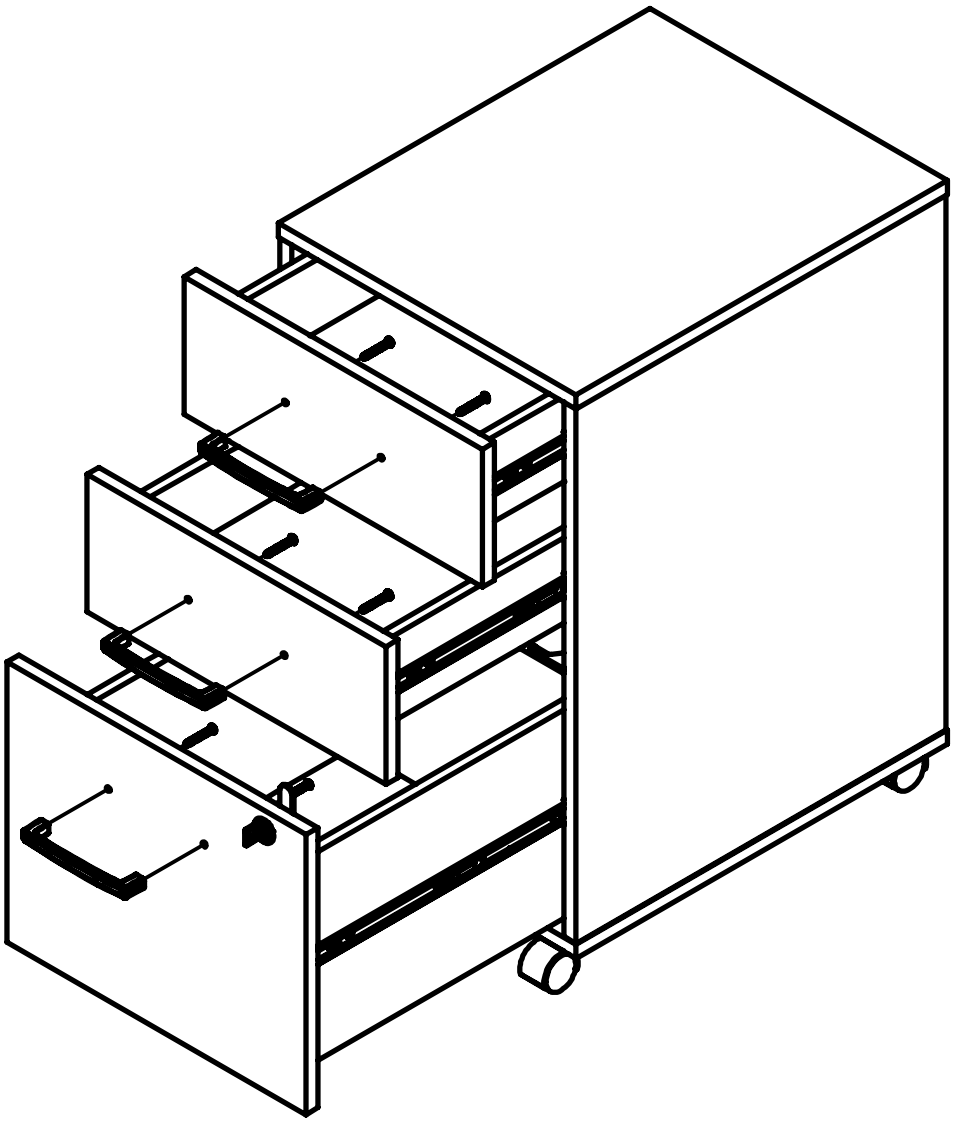

STEP-ÉTAPE-PASO
2

Install - Installer - Instalar

Team Lift
Esfuerzo de equipo
Effort d'équipe

4

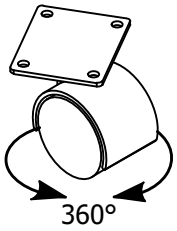

[2]

Swivel caster.
Rueda movible.
Roulette pivotante.

5

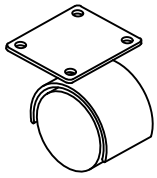

[2]

Non-swivel caster.
Rueda sin movimiento.
Roulette non-pivotante.

1

[16]

#8 x 1/2"

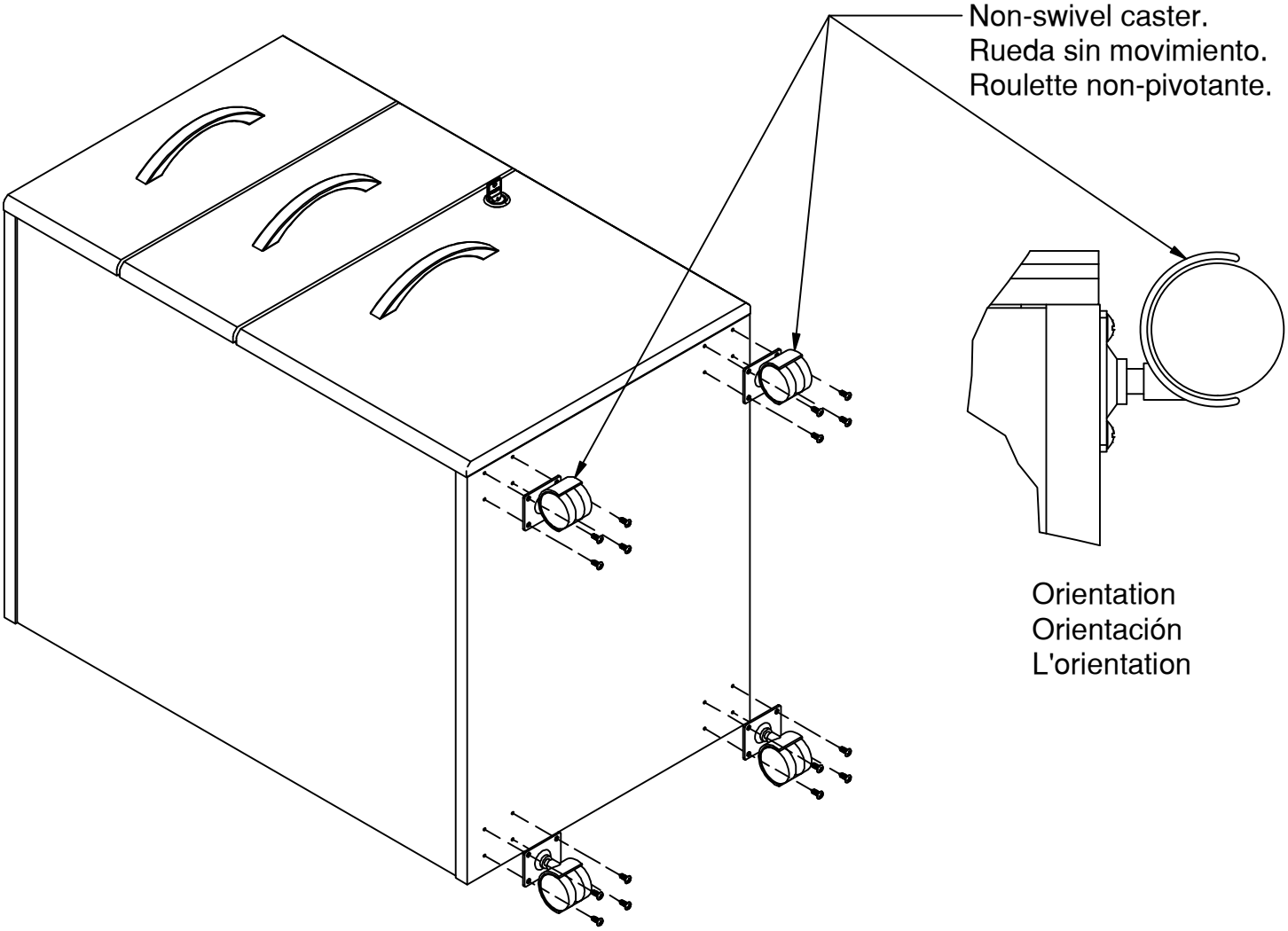

STEP-ÉTAPE-PASO
3

Adjust - Ajuster - Ajustar

DRAWER FRONT VIEW
VISTA FRONTAL DEL CAJÓN
TIROIRS VUS DE FACE

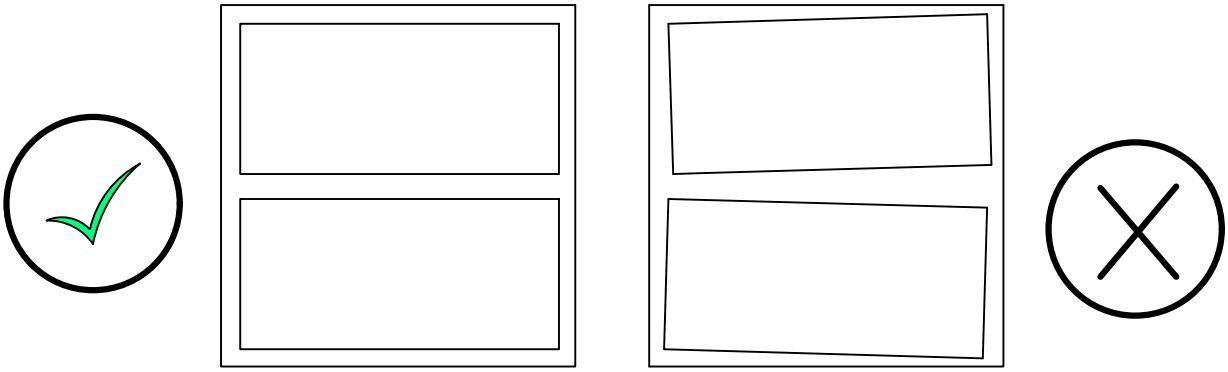

REQUIRED TOOL: PHILLIPS SCREWDRIVER

HERRAMIENTA REQUERIDA: DESTORNILLADOR PHILLIPS
OUTIL REQUIS: TOURNEVIS CRUCIFORME

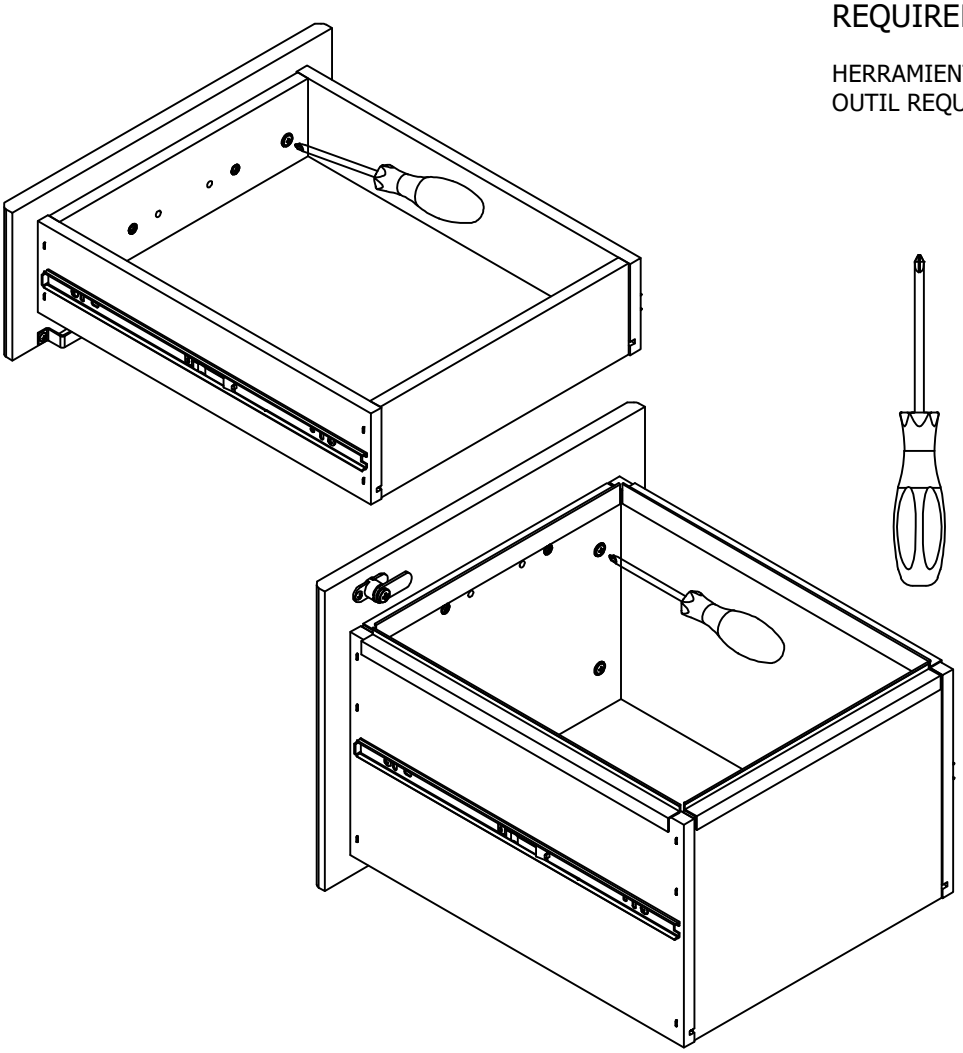

1. LOOSEN SCREWS.
2. ADJUST DRAWER FRONTS.
3. TIGHTEN SCREWS.

1. Afloje los tornillos
2. Ajustar frentes de cajón
3. Apriete los tornillos

1. Desserrer les vis
2. Ajuster les façades des tiroirs
3. Serrer les vis

STEP-ÉTAPE-PASO
4

Load - Charge - Carga

Gently clean surfaces with a damp cloth.
Limpie suavemente las superficies con una esponja húmeda.
Nettoyer délicatement les surfaces à l'aide d'une éponge humide.

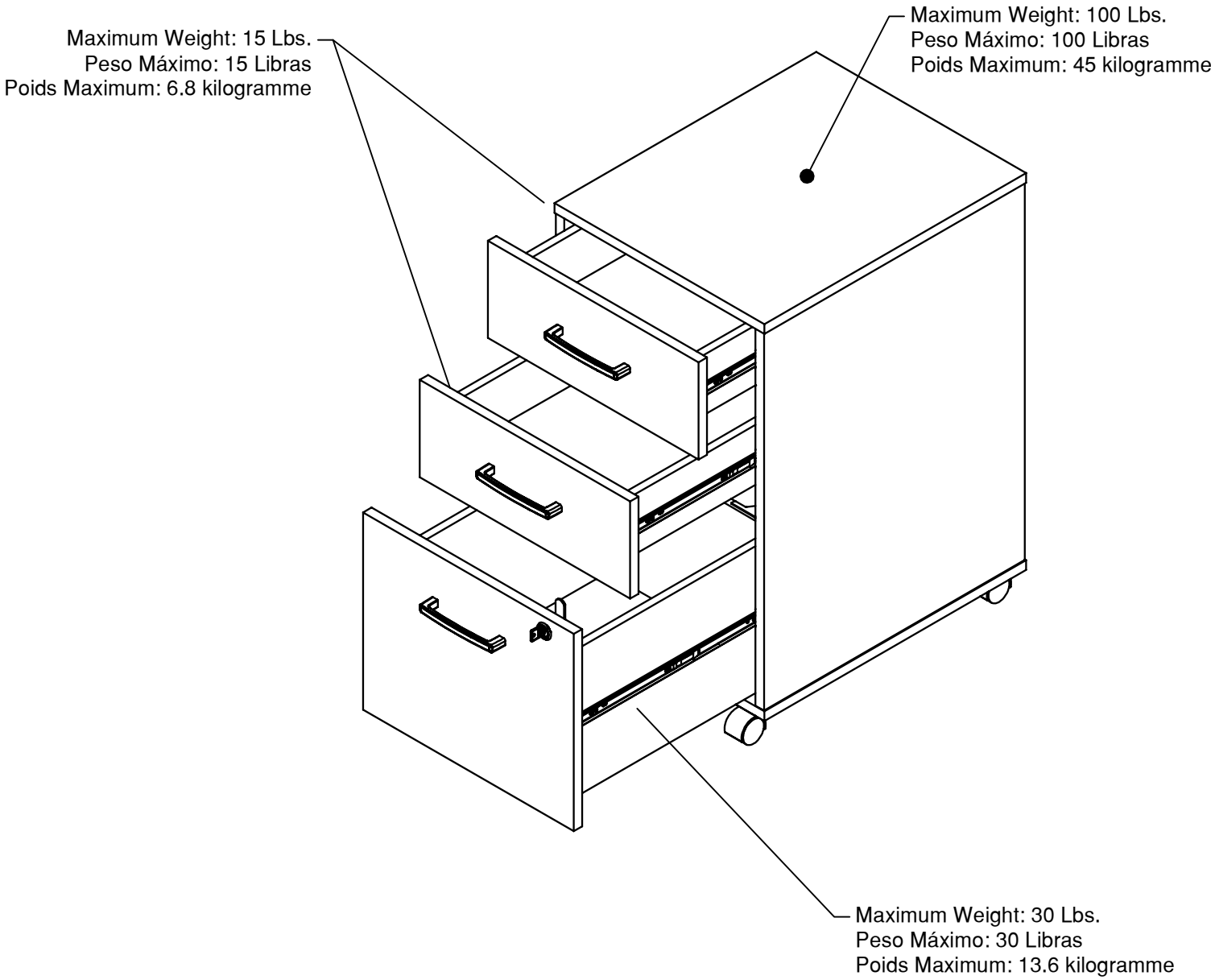

Drawer Removal (if required)
Quitado de Gaveta (si es necesario)
retrait du tiroir (si necessaire)

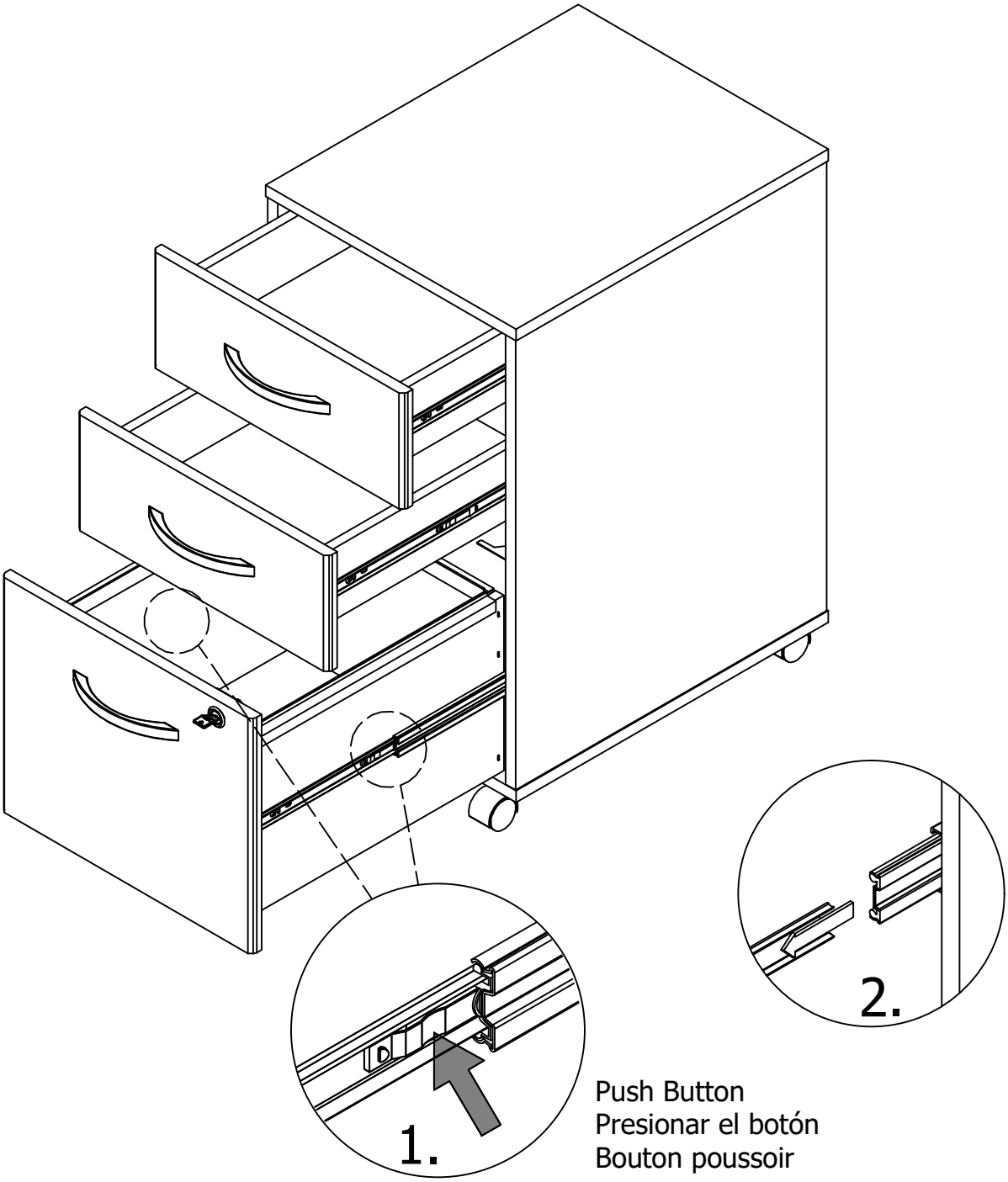

Drawer Installation (if required)
Instalacion de la Gaveta (si es necesario)
Installation du tiroir (si necessaire)

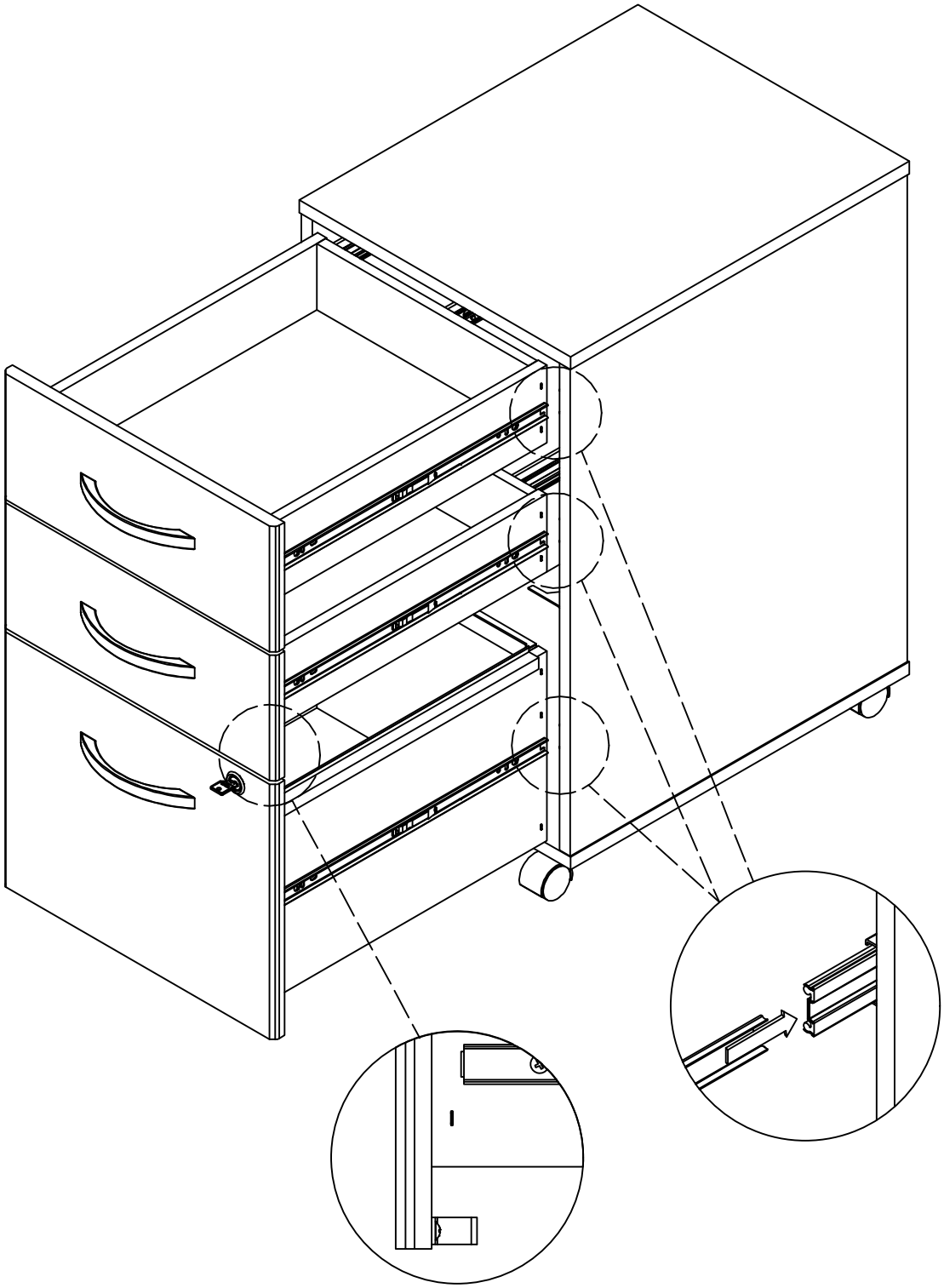

Quality and Safety Guidelines

These guidelines apply across the catalog — seating, tables and desks, storage and shelving, folding and stacking products, classroom and outdoor furniture, and other case goods. Please review this information in addition to the specific assembly instructions included with your product.

BEFORE YOU ASSEMBLE

- Unpack all parts and hardware and check them against the parts list before starting assembly.
- Read all instructions and warnings completely before beginning; assemble on a soft, protected surface.
- Use only the tools and hardware specified in the instructions; do not substitute sizes.
- Tighten all hardware securely but do not overtighten, and get a second person to help with large or heavy pieces.

GENERAL SAFETY & CARE

- Use this product only as intended by the manufacturer; this product is intended for indoor use unless labeled for outdoor/patio use.
- Follow all posted weight capacity limits and usage guidelines provided with the product.
- Do not use the product if any instability, damage, or unusual wear is detected; discontinue use immediately.
- Regularly inspect for loose hardware, worn components, cracks, or other signs of deterioration, and tighten hardware as needed; replace damaged or worn parts only with manufacturer-approved replacement parts.
- Keep children supervised around furniture and any moving components.
- Wipe down surfaces regularly with a soft, clean, lint-free cloth; for most materials, a cloth lightly dampened with mild soap and water is sufficient.
- Avoid harsh chemicals, bleach, ammonia-based cleaners, solvents, and abrasive scrubbers, which can damage finishes, fabric, and hardware.
- Blot spills promptly rather than rubbing, and dry surfaces thoroughly after cleaning; avoid saturating any material with water.
- Keep products out of direct, prolonged sunlight and away from heat sources to help prevent fading, warping, or cracking over time.

STORAGE, SHELVING & MOVING FURNITURE

- Remove contents before moving storage furniture, cabinets, dressers, desks, or shelving units.
- Use proper lifting technique and adequate assistance when moving heavy items; do not drag, push, or pull furniture unless it is designed for such movement.
- Follow all anti-tip and wall-anchoring instructions when provided, especially for tall or top-heavy pieces.
- Keep fingers, hands, and other body parts clear of hinges, drawer slides, lift mechanisms, and folding or adjustable features.

SEATING, FOLDING & ADJUSTABLE PRODUCTS

- Sit fully and properly within the seat area; keep chairs stationary when sitting down or standing up, and do not use seating as a ladder or step stool.
- Do not lean excessively backward, forward, or sideways, as this may result in tipping or loss of balance.
- For rocking, reclining, swivel, or height-adjustable products, use only smooth, controlled movements and avoid excessive force.
- For folding and stacking chairs and tables, confirm legs and locking mechanisms are fully extended and secured before each use, and do not exceed recommended stack height limits.

Warranty & Product Support

For maintenance instructions, replacement parts, warranty information, or product support, please contact **Customer Experience** — Email: customerexperience@theubiquegroup.com | Phone: 866-552-2810.

Additional product information and warranty details can be found at www.theubiquegroup.com.

ASSEMBLY GUIDE
GUIDE D'ASSEMBLAGE
INSTRUCCIONES DE ENSAMBLAJE

FLASHWorkplace

72W x 24D Desk / Credenza / Return
Bureau/crédence/retour 72L x 24P
Escritorio/credenza/retorno 72An x 24P

196861148576
196861148583

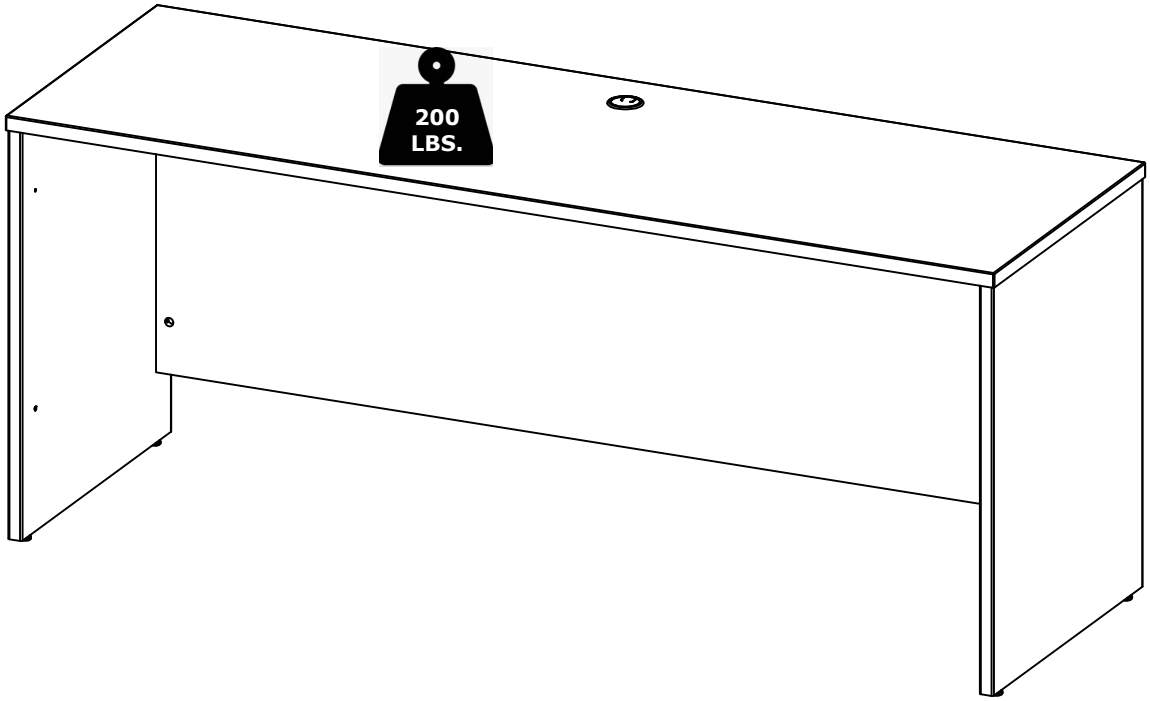

⚠ **NOTE:**
If there are parts missing from your order or if your product was damaged during shipping, PLEASE CONTACT US DIRECTLY.

⚠ **NOTE :**
S'il vous manque des pièces ou si votre meuble a été endommagé pendant le transport, VEUILLEZ NOUS CONTACTER DIRECTEMENT.

⚠ **NOTA:**
En caso de piezas faltantes o si su producto fue dañado durante el envío, POR FAVOR CONTÁCTENOS DIRECTAMENTE.

KEEP MANUAL FOR FUTURE REFERENCE. | CONSERVEZ LE MANUEL POUR RÉFÉRENCE FUTURE. | GUARDE EL MANUAL PARA REFERENCIA FUTURA.

Customer Service Email: CustomerExperience@theubiquegroup.com | Phone: 866-552-2810

Parts - Pièces - Piezas

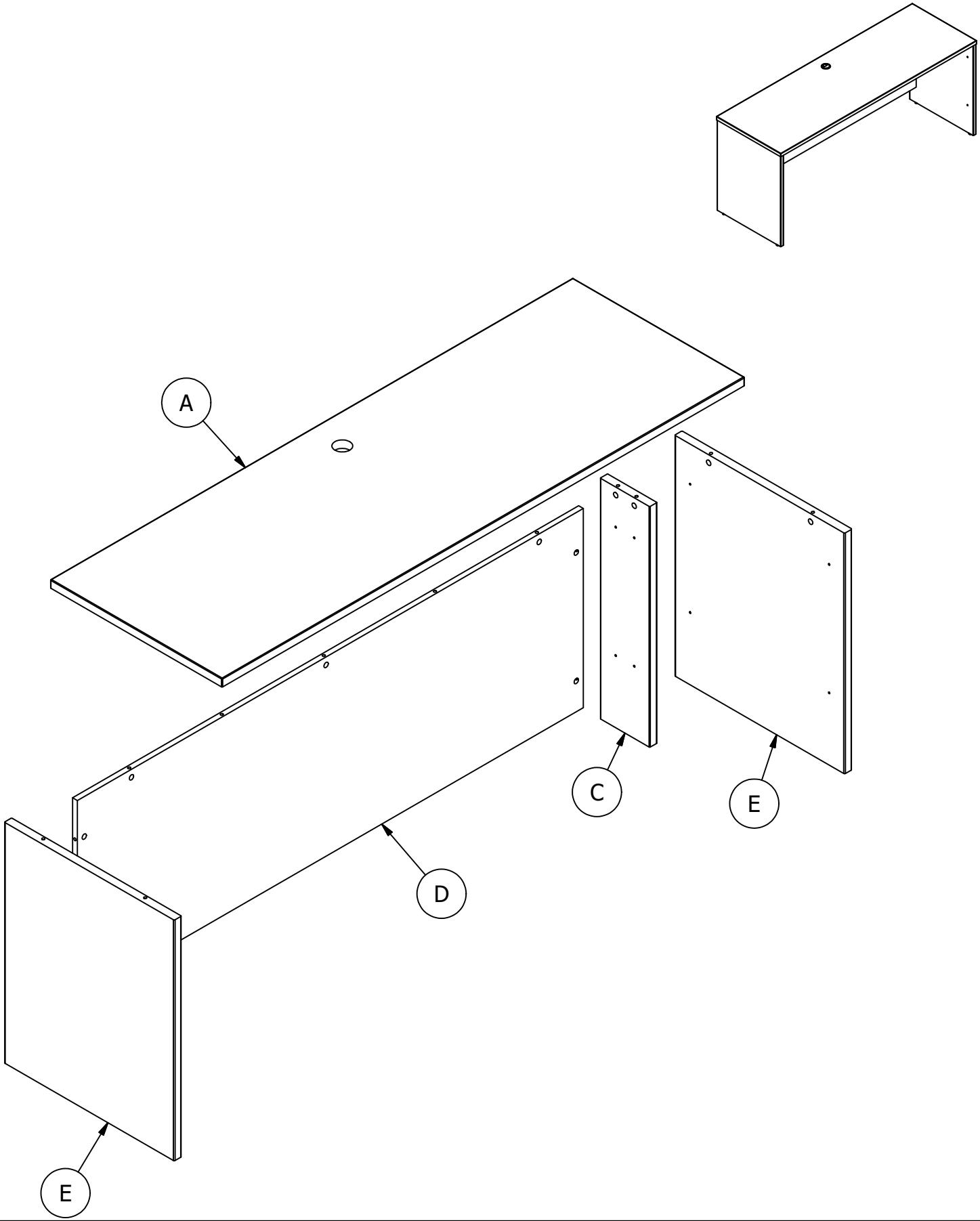

Fasteners - Fixations - Sujetadores

1

8 x 30

[2]

2

[11]

3

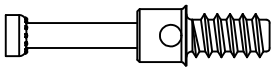

[11]

4

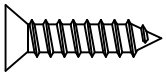

#10 x 3/4"

[3]

Hardware - Quincaillerie - Quincaillas

5

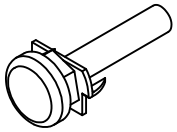

[4]

6

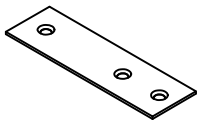

[1]

7

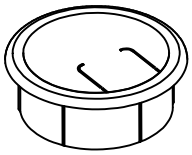

[1]

8

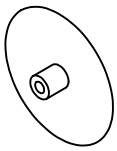

[11]

9

5mm

[4]

STEP-ÉTAPE-PASO
1

Option - Opción - Option

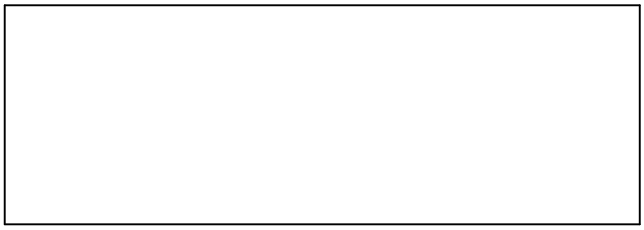

Go to Step 2.
Proceda al paso 2.
Allez à l'étape 2.

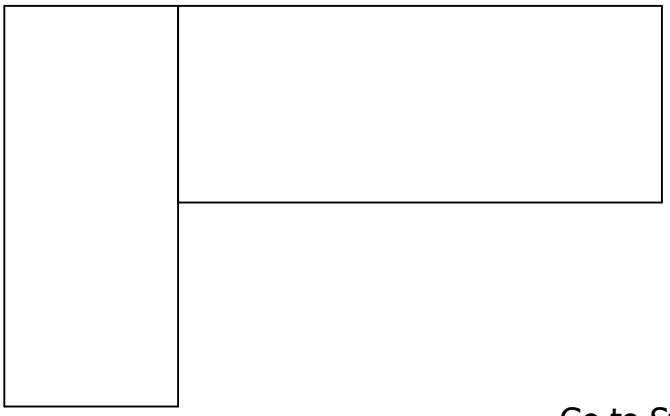

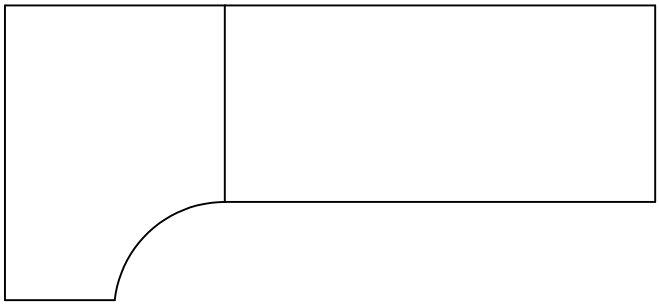

Go to Step 7.
Proceda al paso 7.
Allez à l'étape 7.

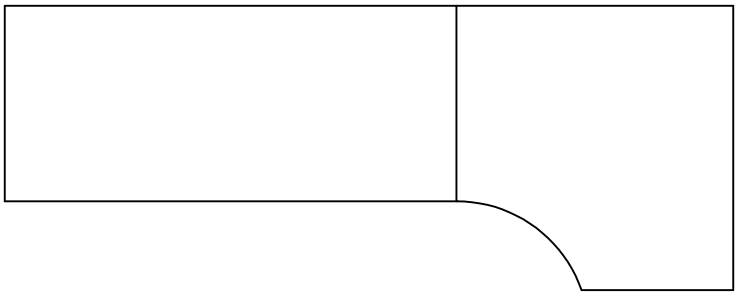

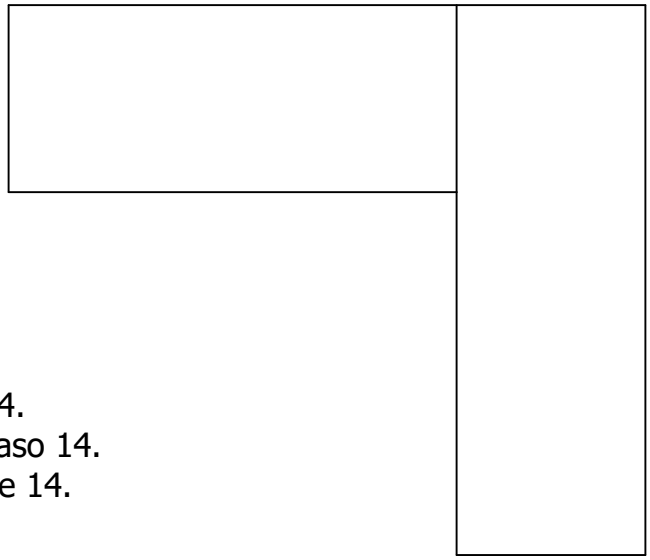

Go to Step 14.
Proceda al paso 14.
Allez à l'étape 14.

STEP-ÉTAPE-PASO
2

Prepare - Préparer - Preparar

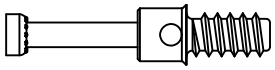
[2]

5mm
[2]

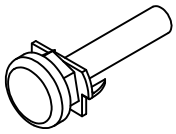
[2]

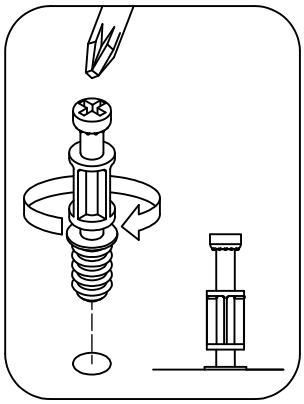

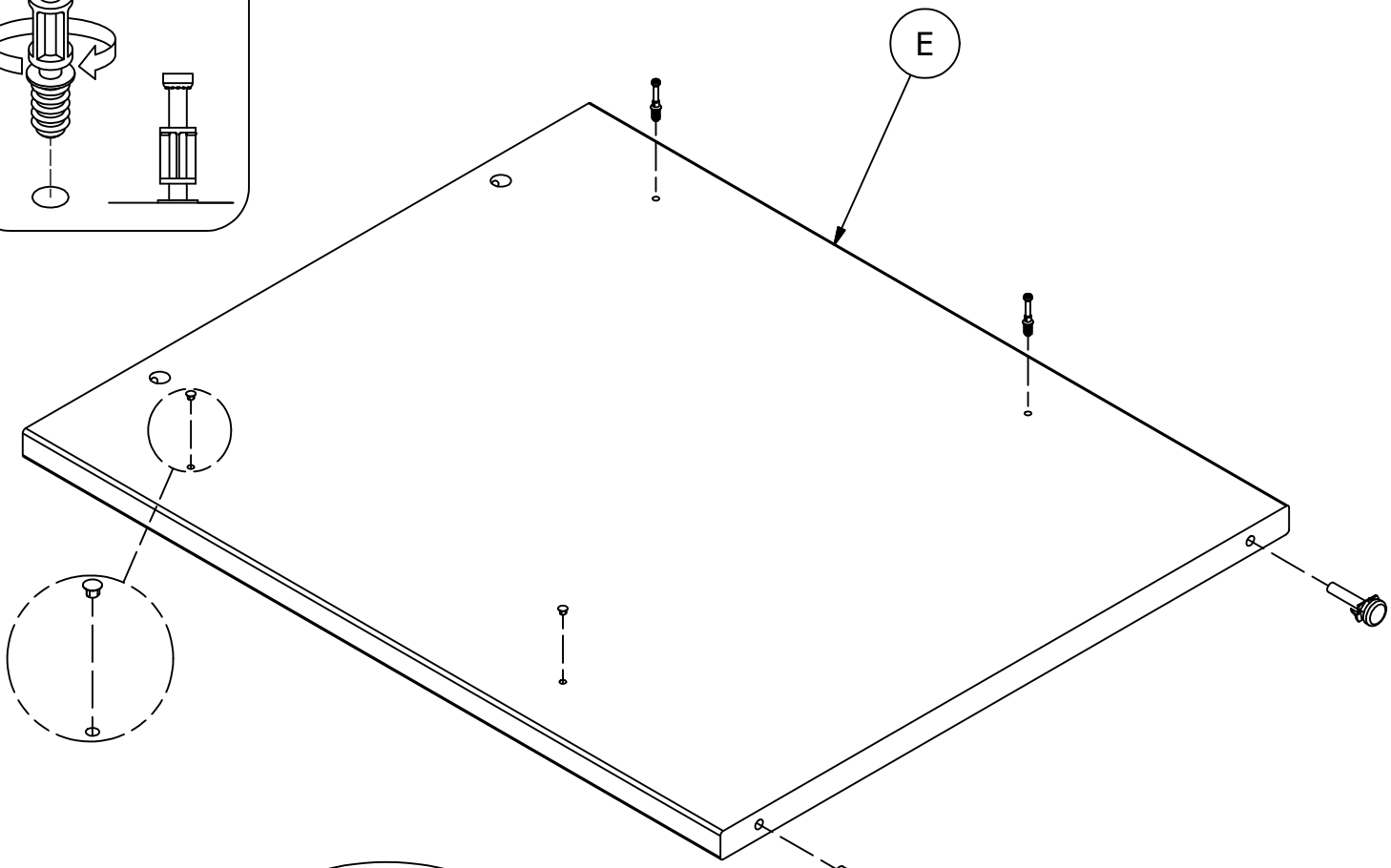

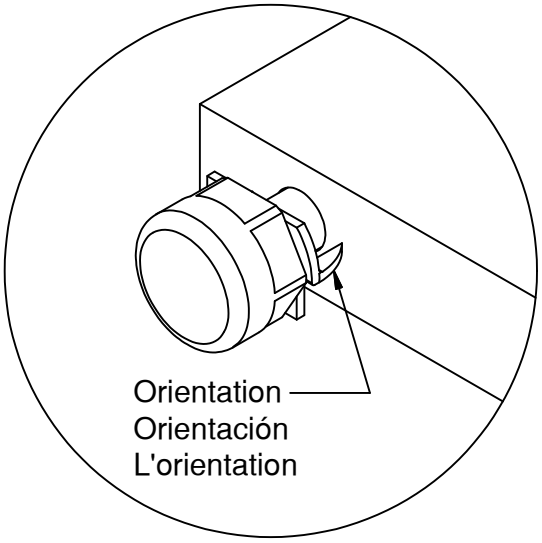

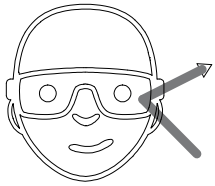
Safety glasses
Gafas de seguridad
Lunettes de protection

STEP-ÉTAPE-PASO
3

Prepare - Préparer - Preparar

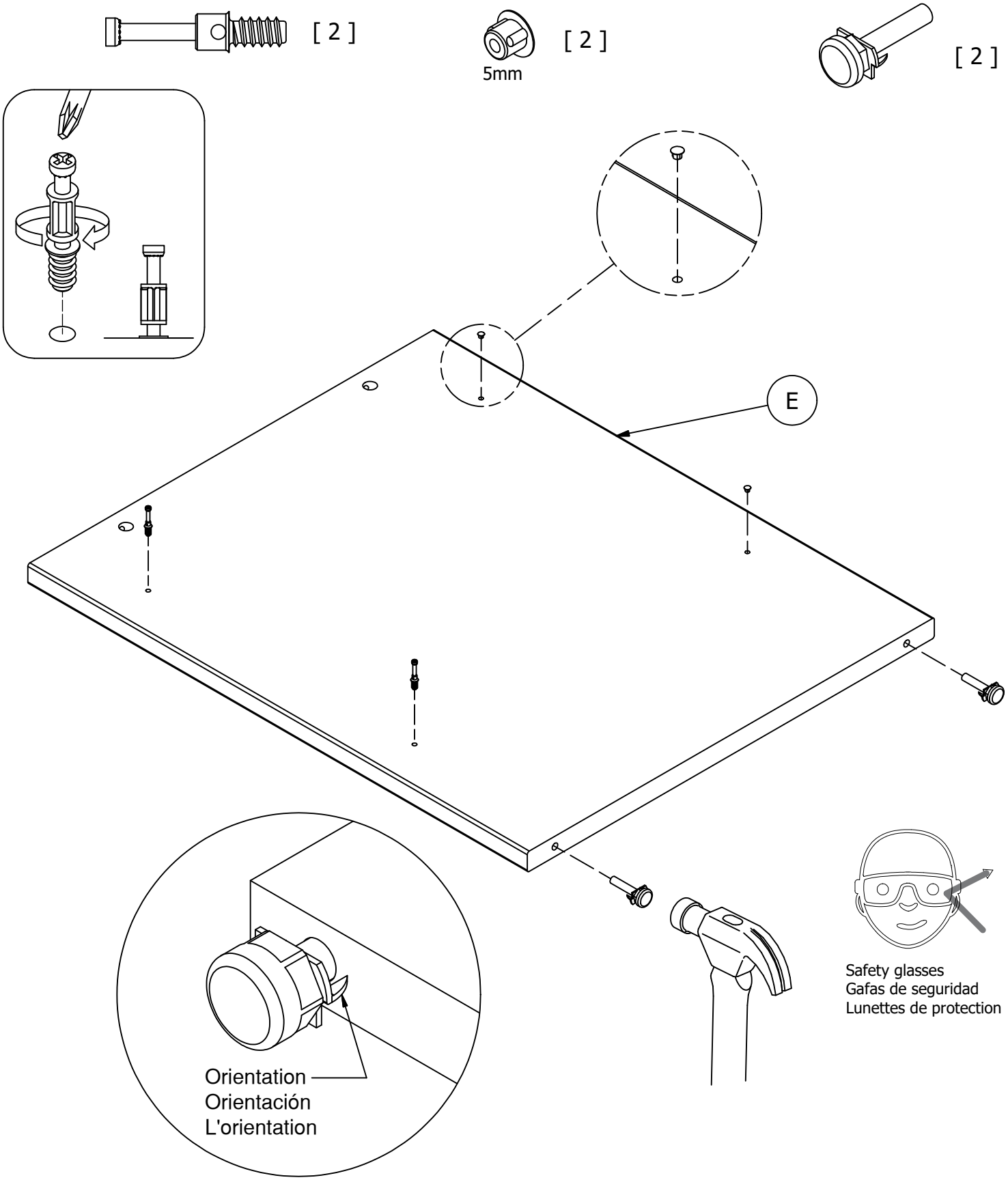

STEP-ÉTAPE-PASO
4

Assemble - Assembler - Assemblar

Team Lift
Esfuerzo de equipo
Effort d'équipe

[4]

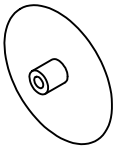

[4]

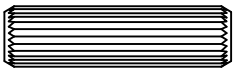

8 x 30

[2]

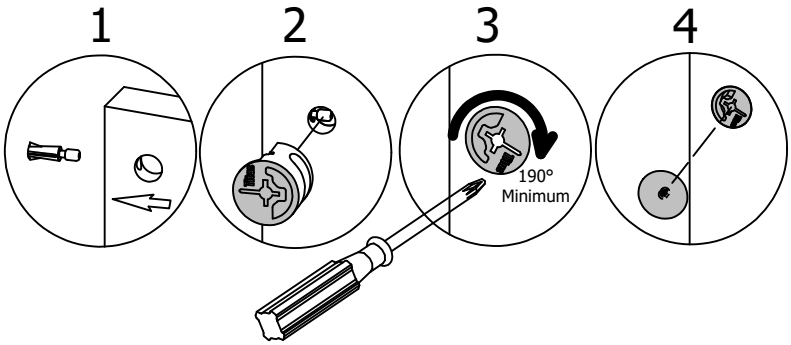

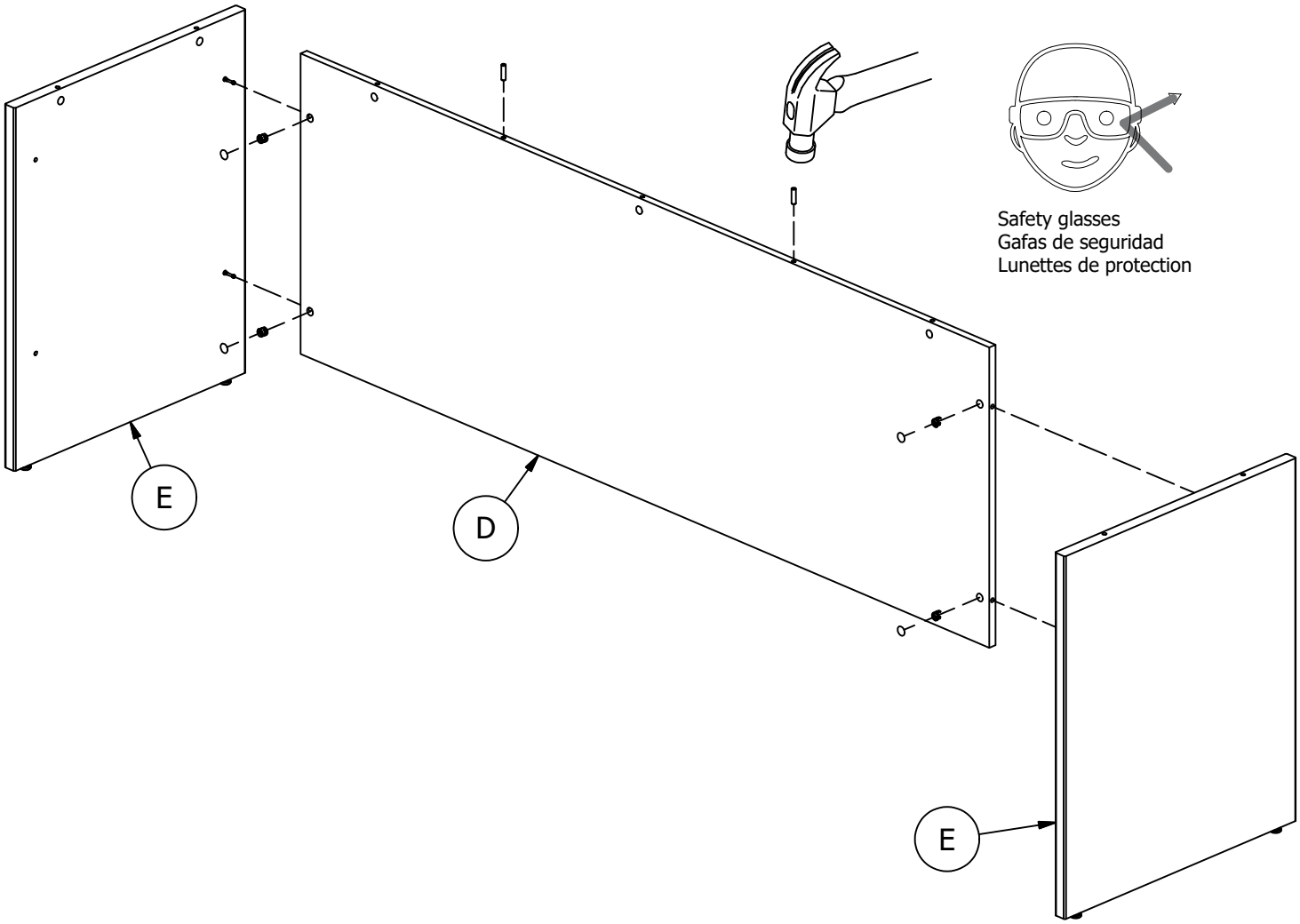

Safety glasses
Gafas de seguridad
Lunettes de protection

STEP-ÉTAPE-PASO
5

Prepare - Préparer - Preparar

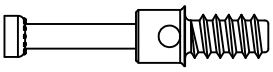

[7]

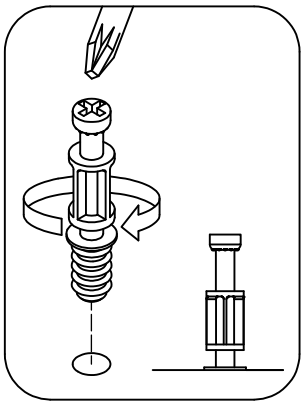

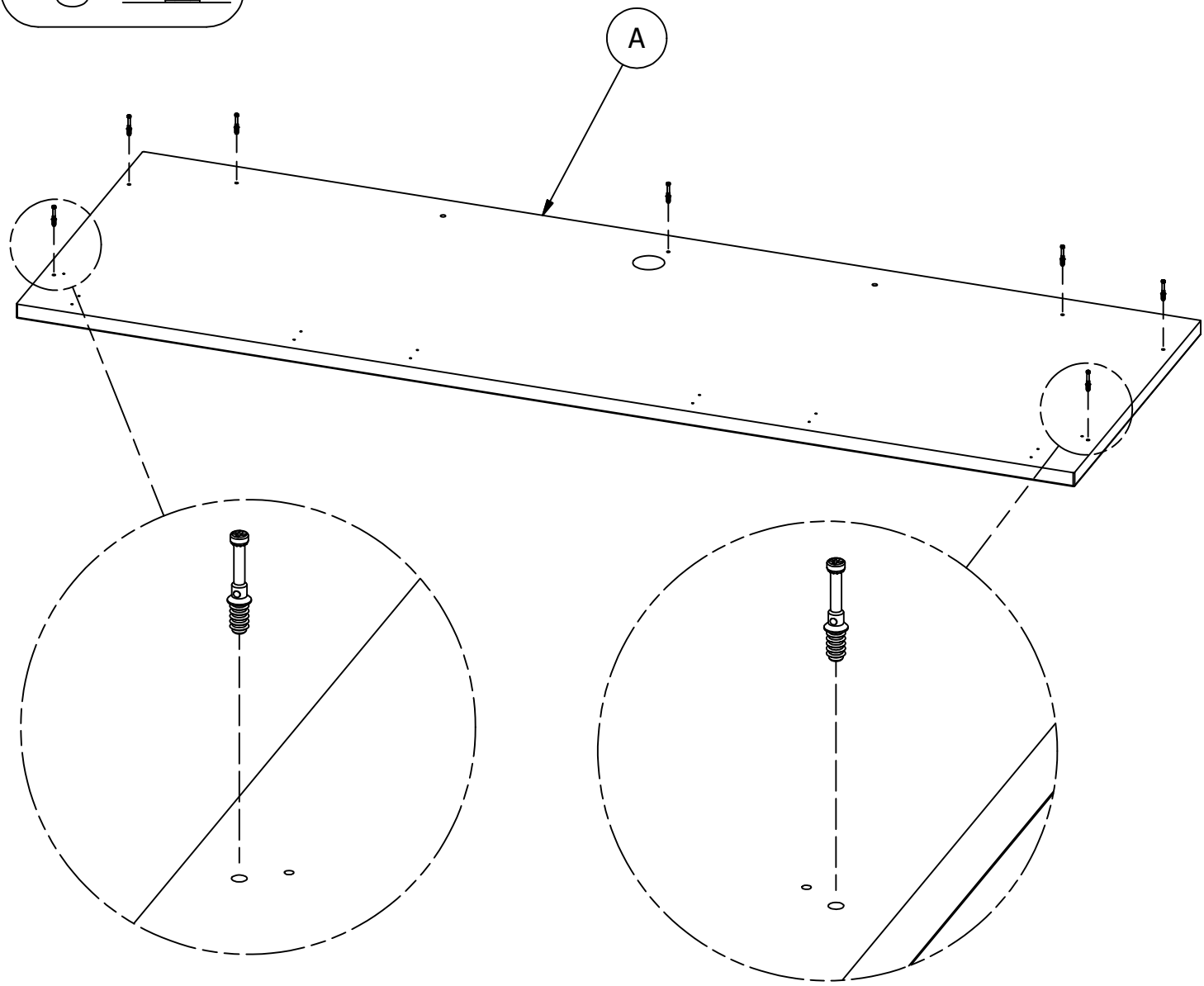

STEP-ÉTAPE-PASO
6

Assemble - Assembler - Assemblar

Team Lift
Esfuerzo de equipo
Effort d'équipe

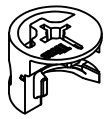

[7]

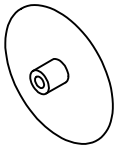

[7]

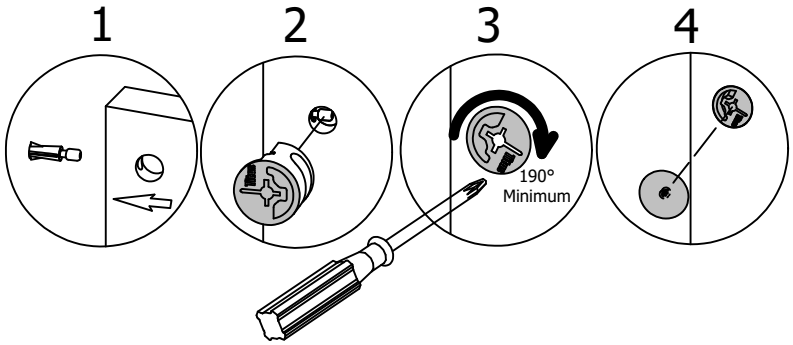

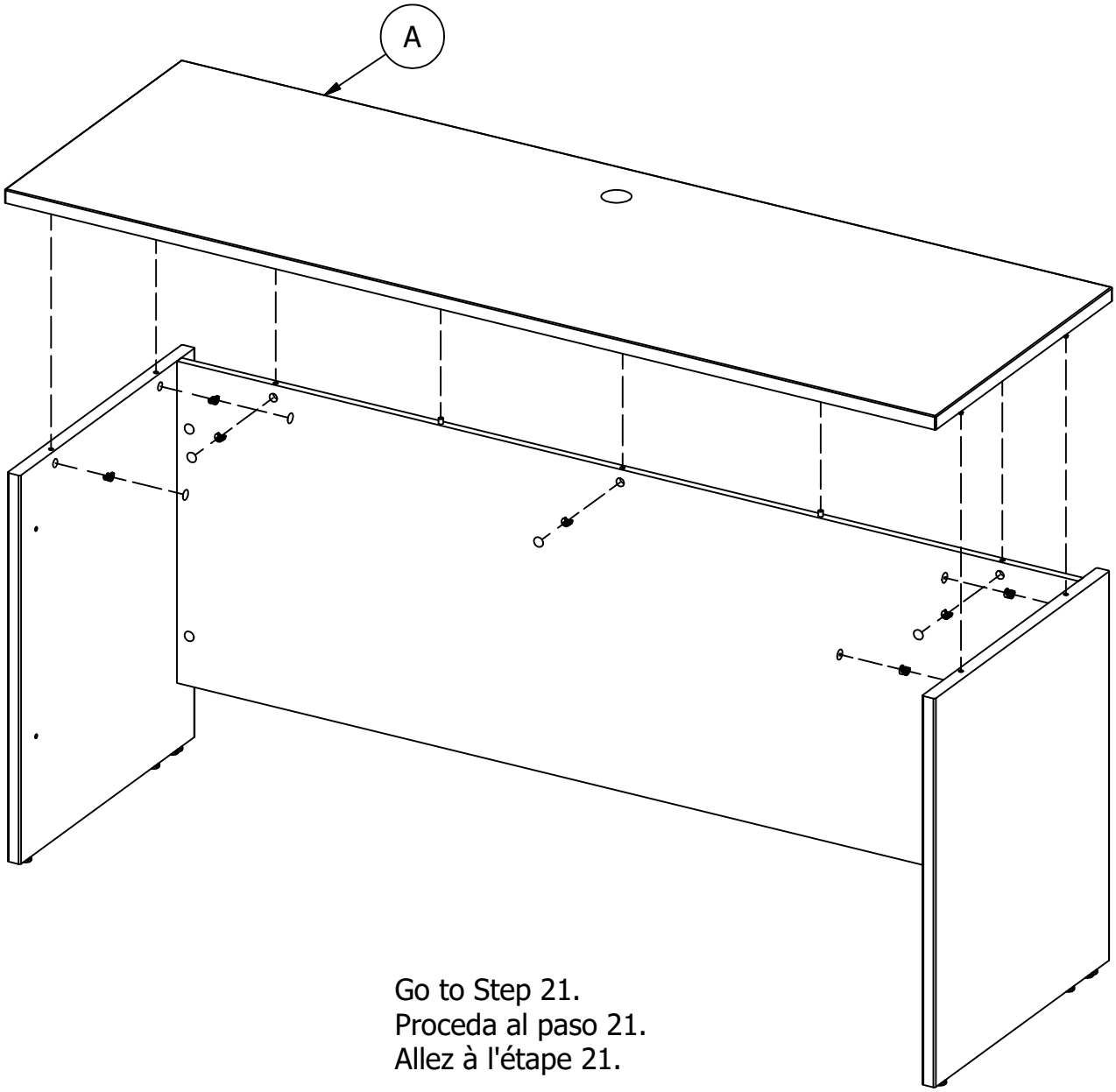

Go to Step 21.
Proceda al paso 21.
Allez à l'étape 21.

STEP-ÉTAPE-PASO
7

Prepare - Préparer - Preparar

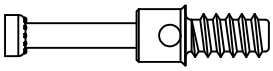
[2]

5mm
[2]

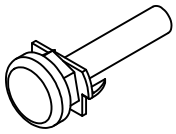
[2]

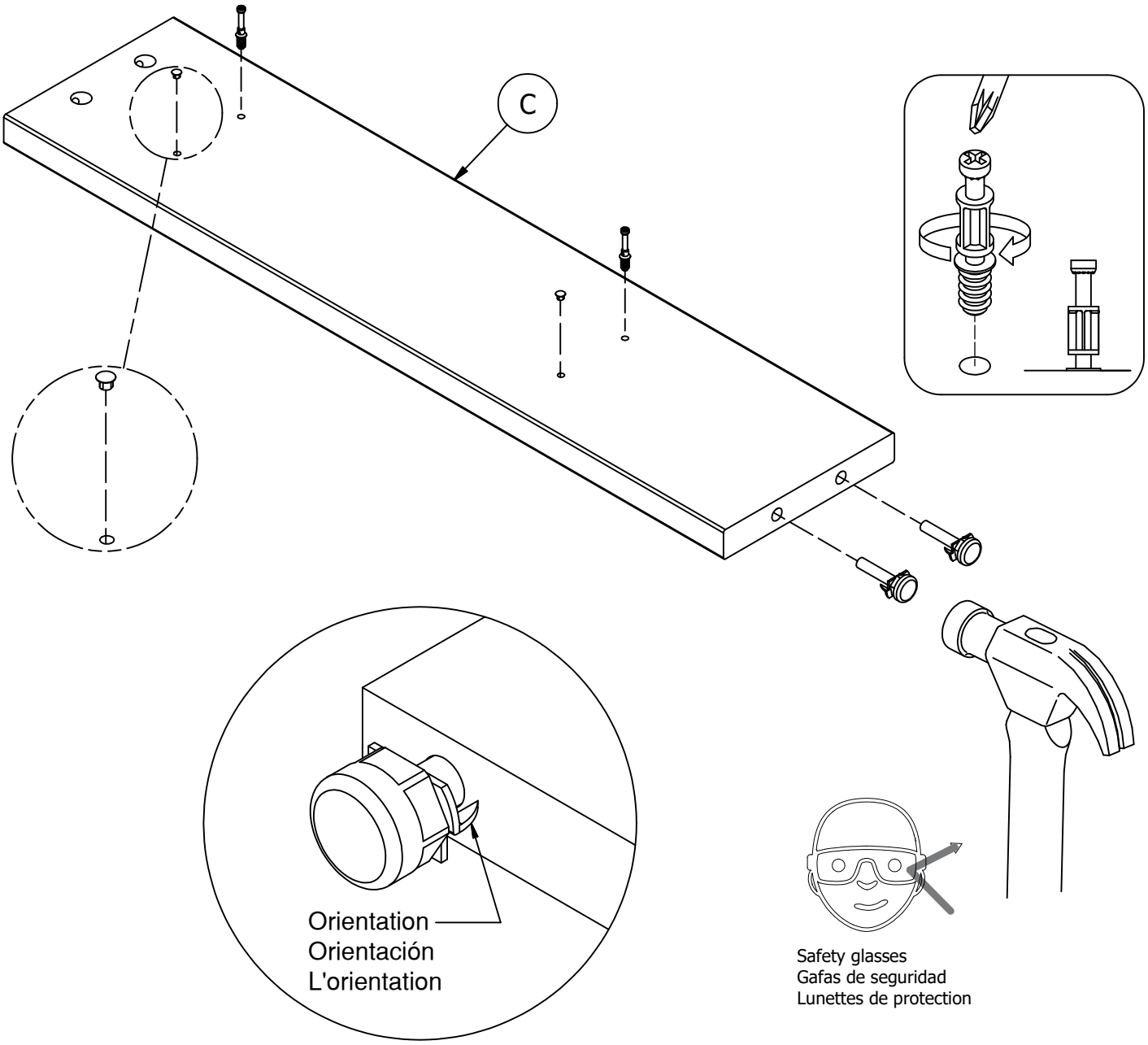

STEP-ÉTAPE-PASO
8

Assemble - Assembler - Assemblar

Team Lift
Esfuerzo de equipo
Effort d'équipe

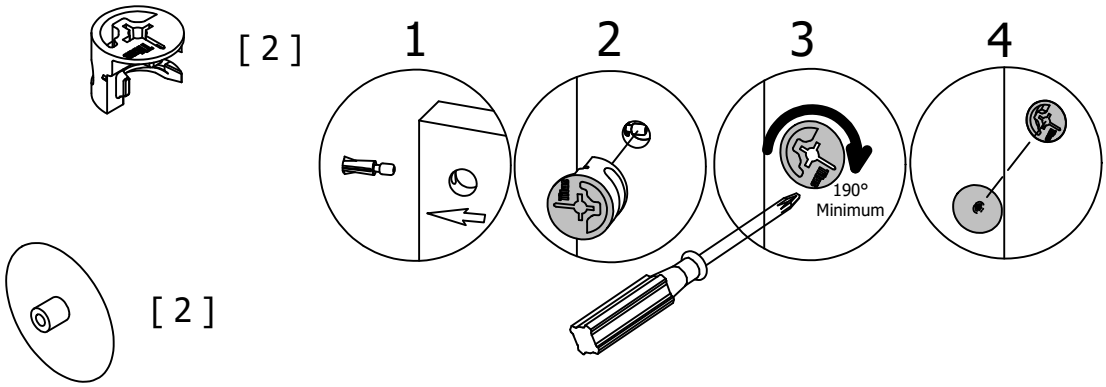

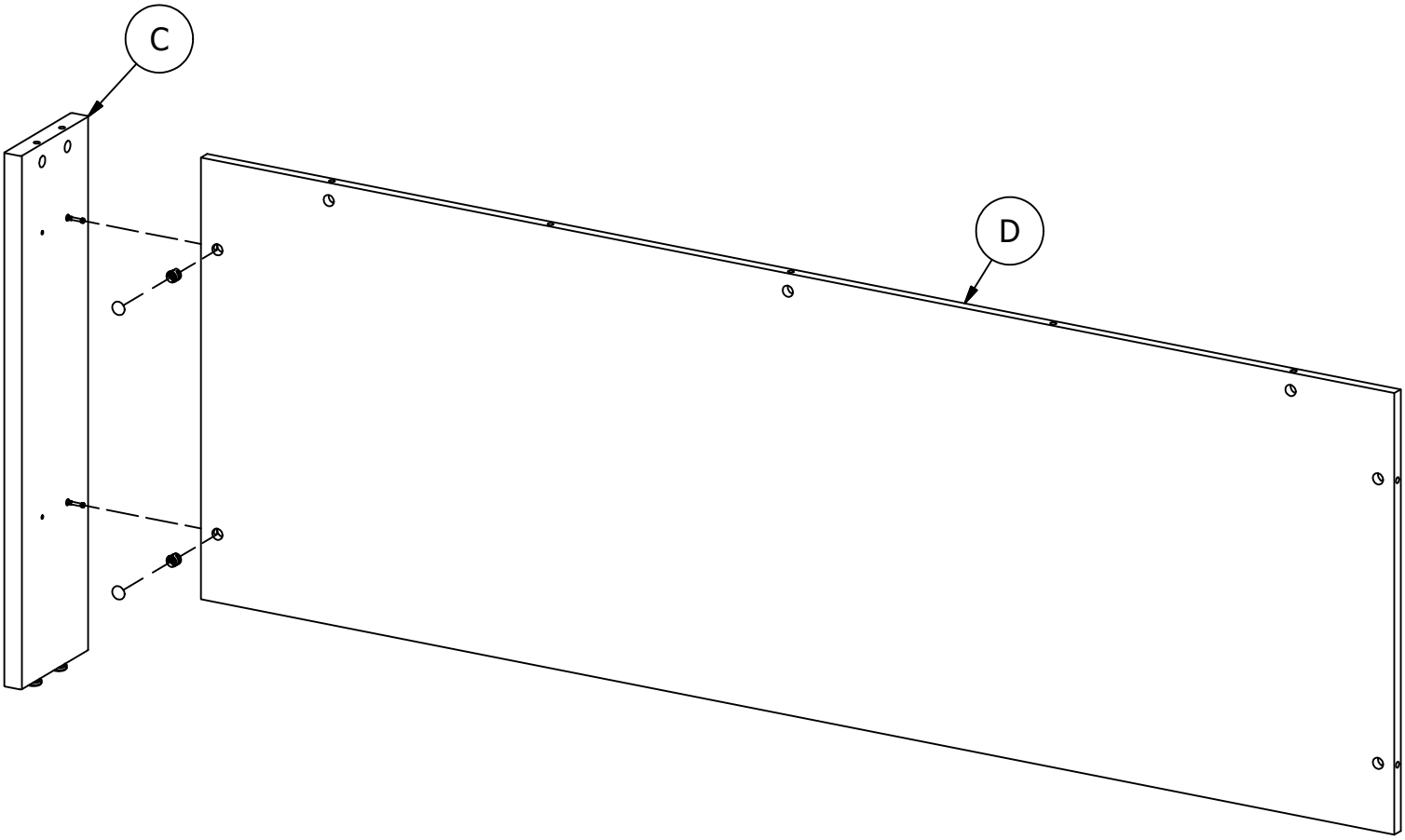

STEP-ÉTAPE-PASO
9

Prepare - Préparer - Preparar

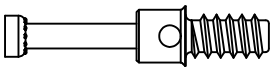
[2]

5mm
[2]

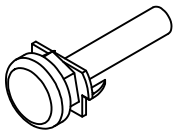
[2]

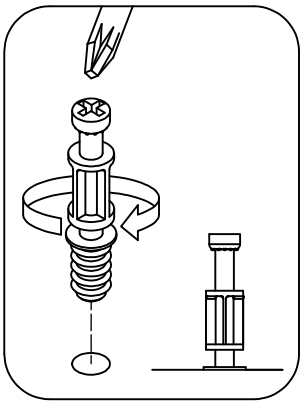

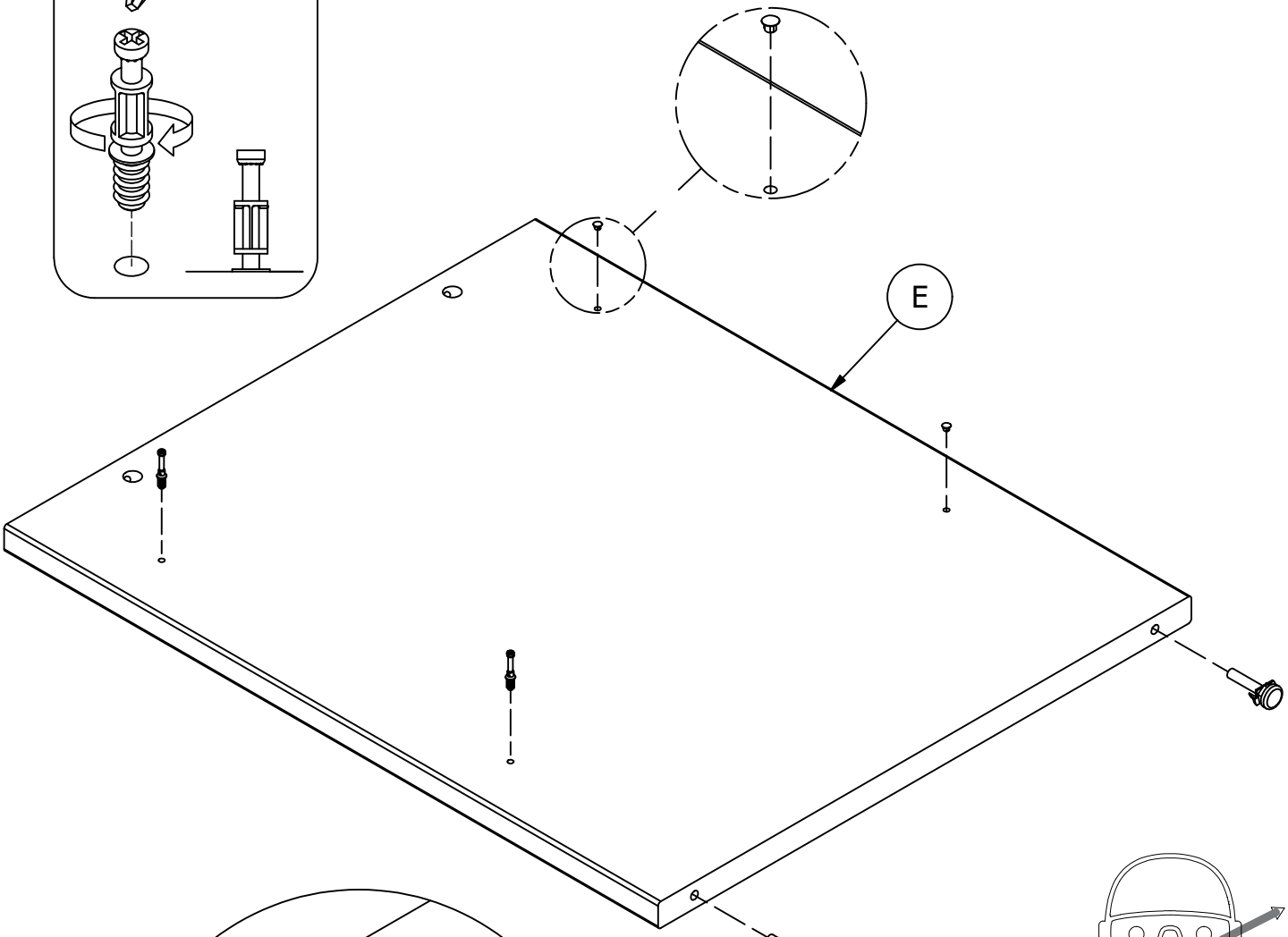

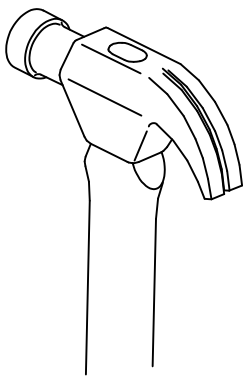

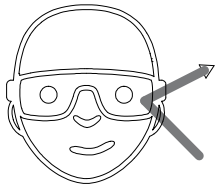

Safety glasses
Gafas de seguridad
Lunettes de protection

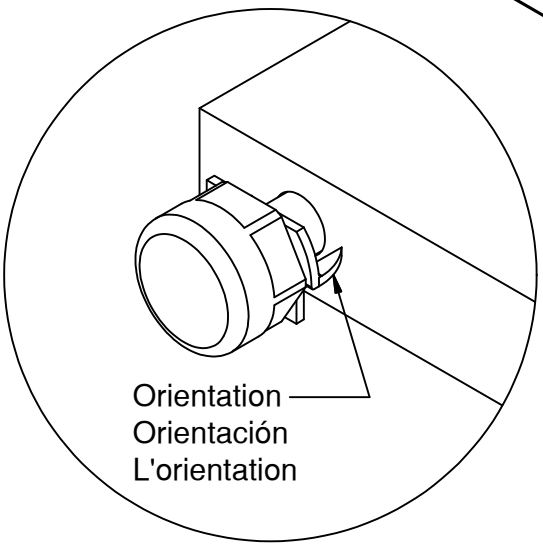

STEP-ÉTAPE-PASO
10

Assemble - Assembler - Assemblar

Team Lift
Esfuerzo de equipo
Effort d'équipe

[2]

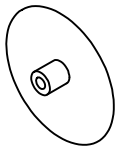

[2]

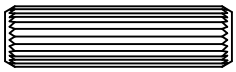

8 x 30

[2]

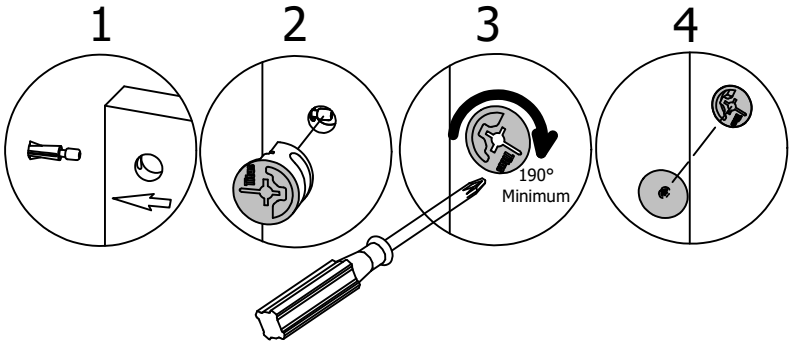

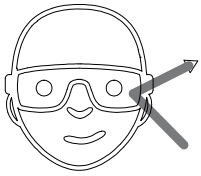

Safety glasses
Gafas de seguridad
Lunettes de protection

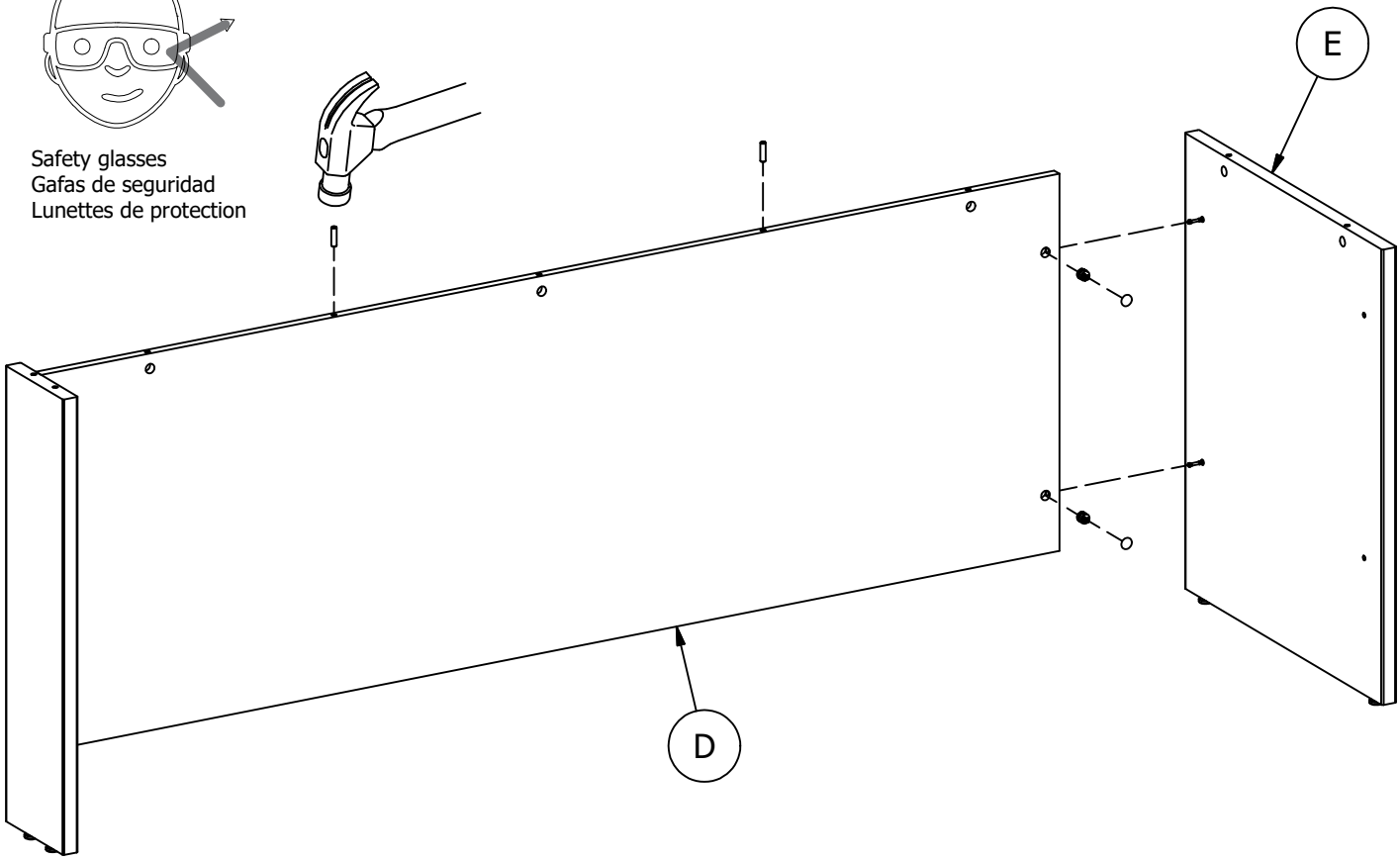

STEP-ÉTAPE-PASO

11

Prepare - Préparer - Preparar

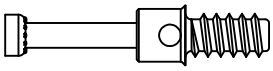

[6]

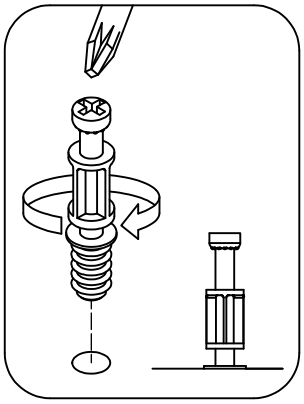

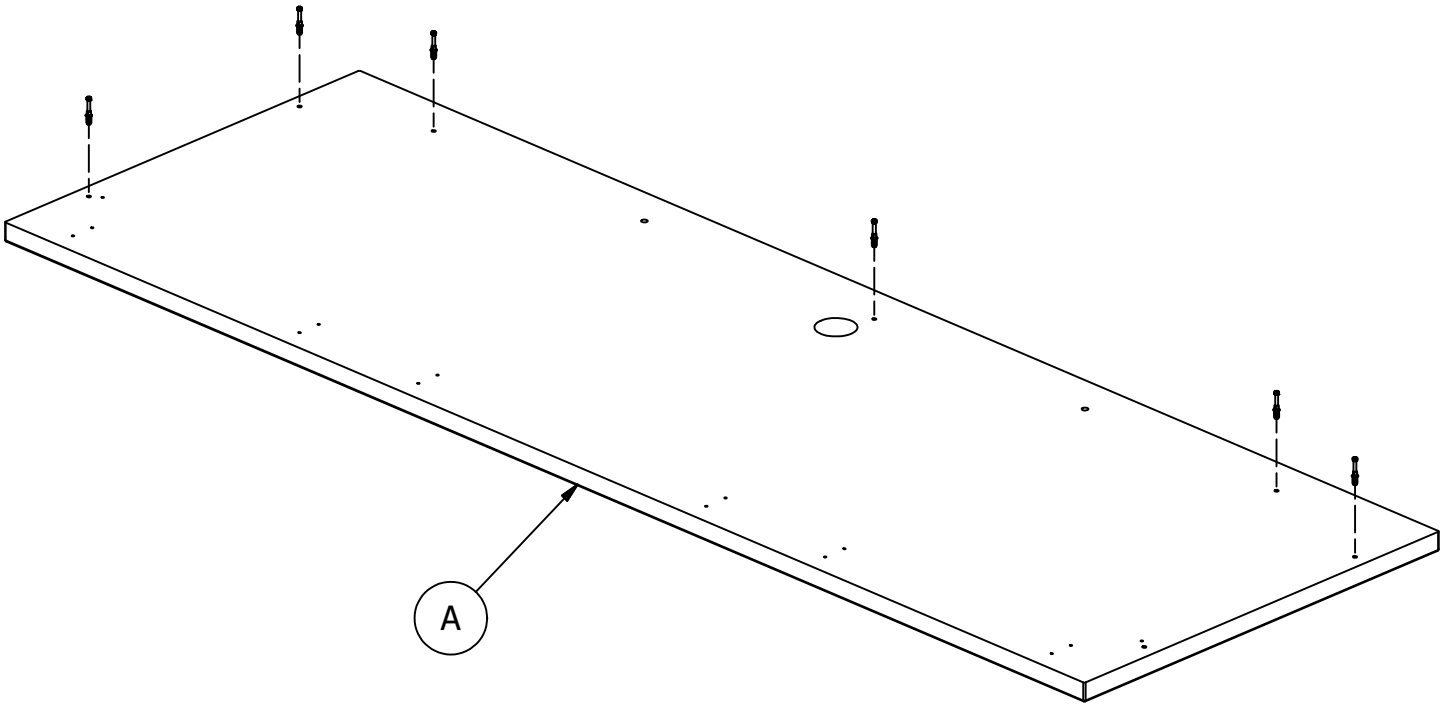

STEP-ÉTAPE-PASO
12

Assemble - Assembler - Assemblar

Team Lift
Esfuerzo de equipo
Effort d'équipe

[6]

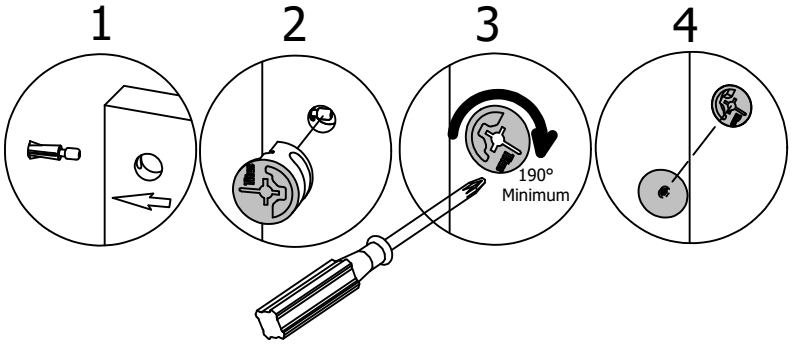

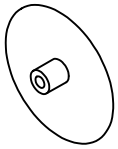

[6]

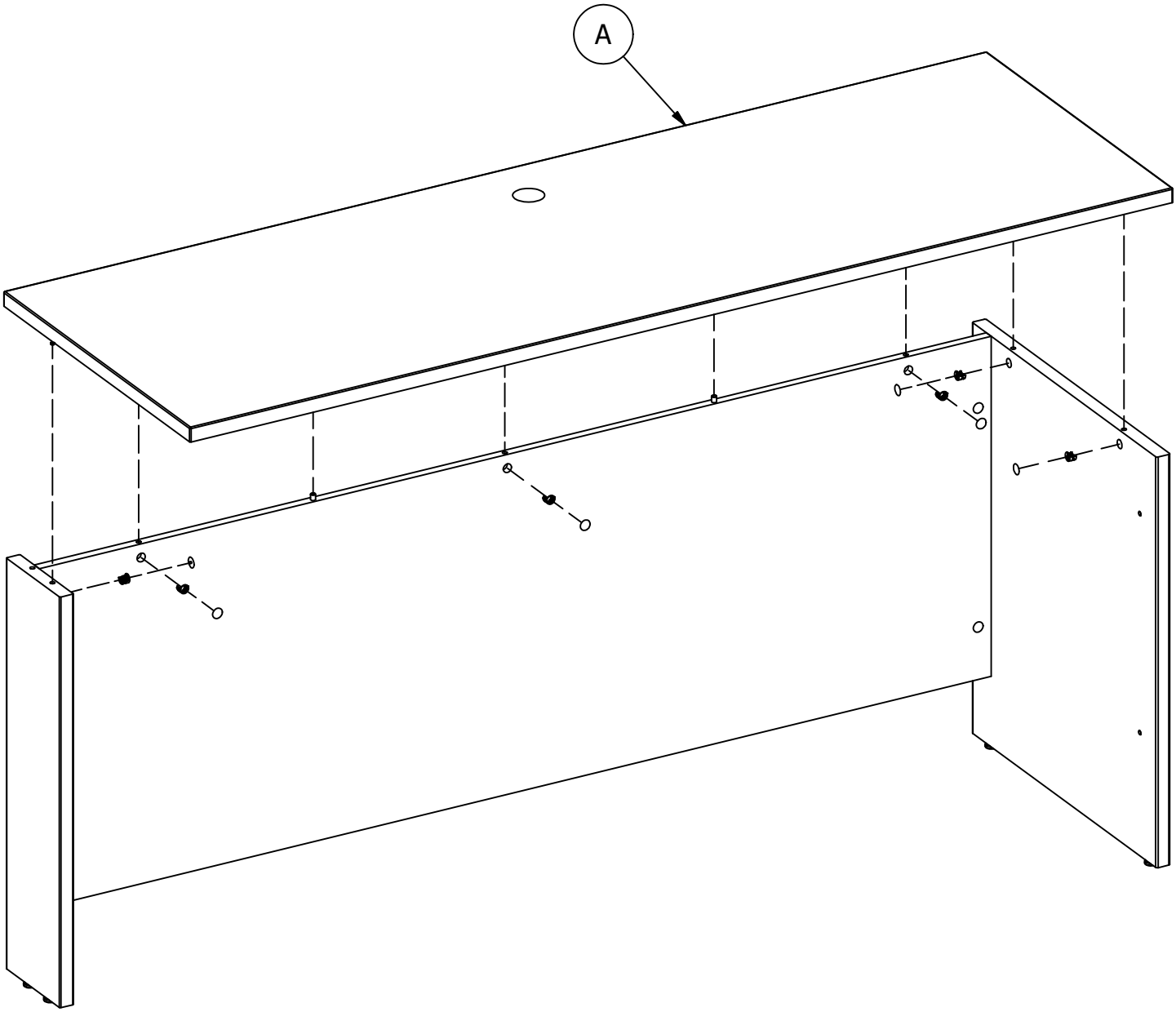

Install - Installer - Instalar

Team Lift
Esfuerzo de equipo
Effort d'équipe

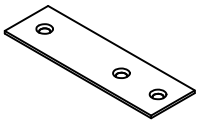

[1]

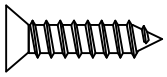

#10 x 3/4"

[3]

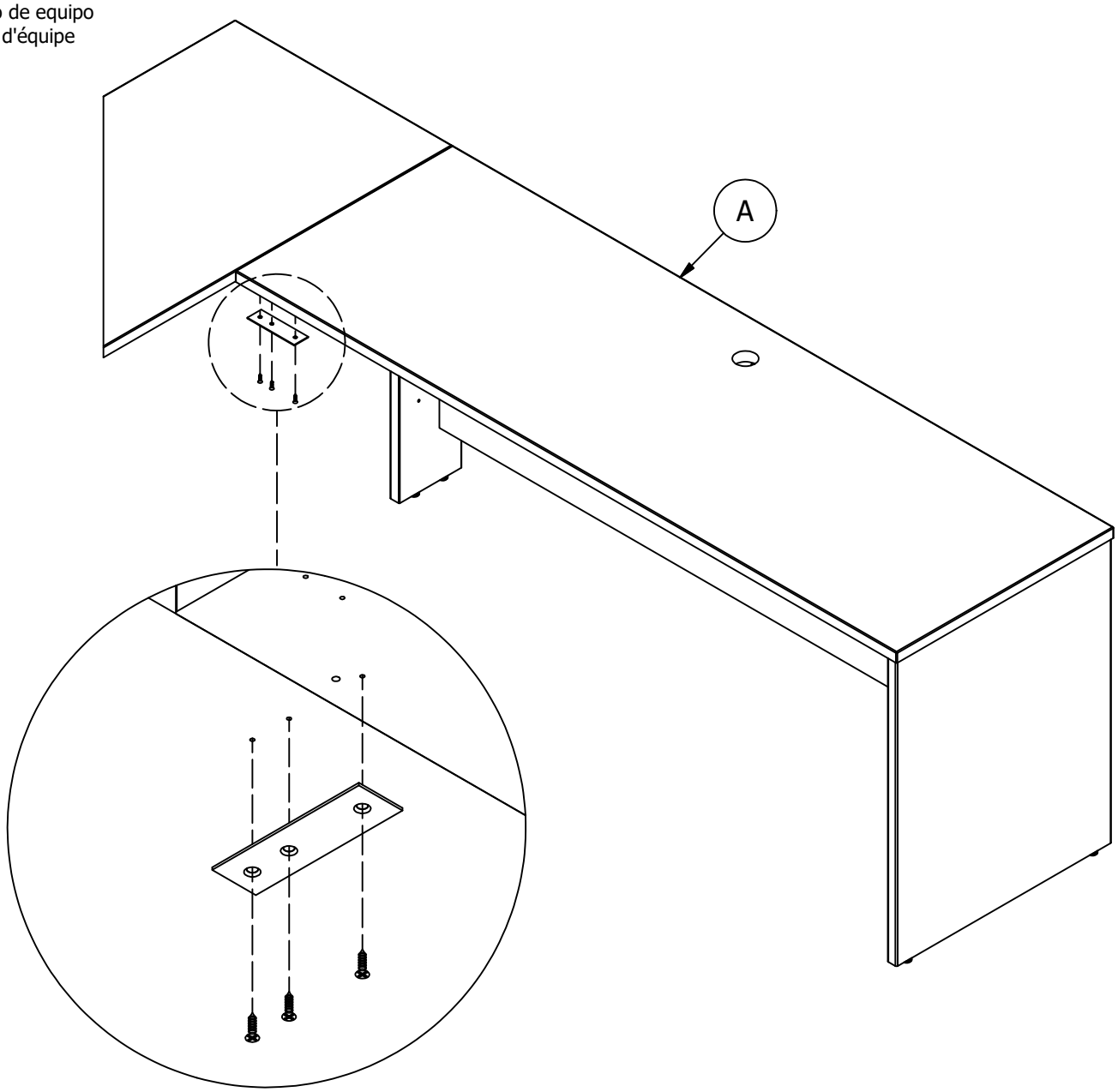

Go to Step 21.
Proceda al paso 21.
Allez à l'étape 21.

STEP-ÉTAPE-PASO
14

Prepare - Préparer - Preparar

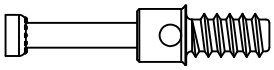
[2]

5mm
[2]

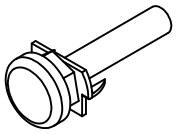
[2]

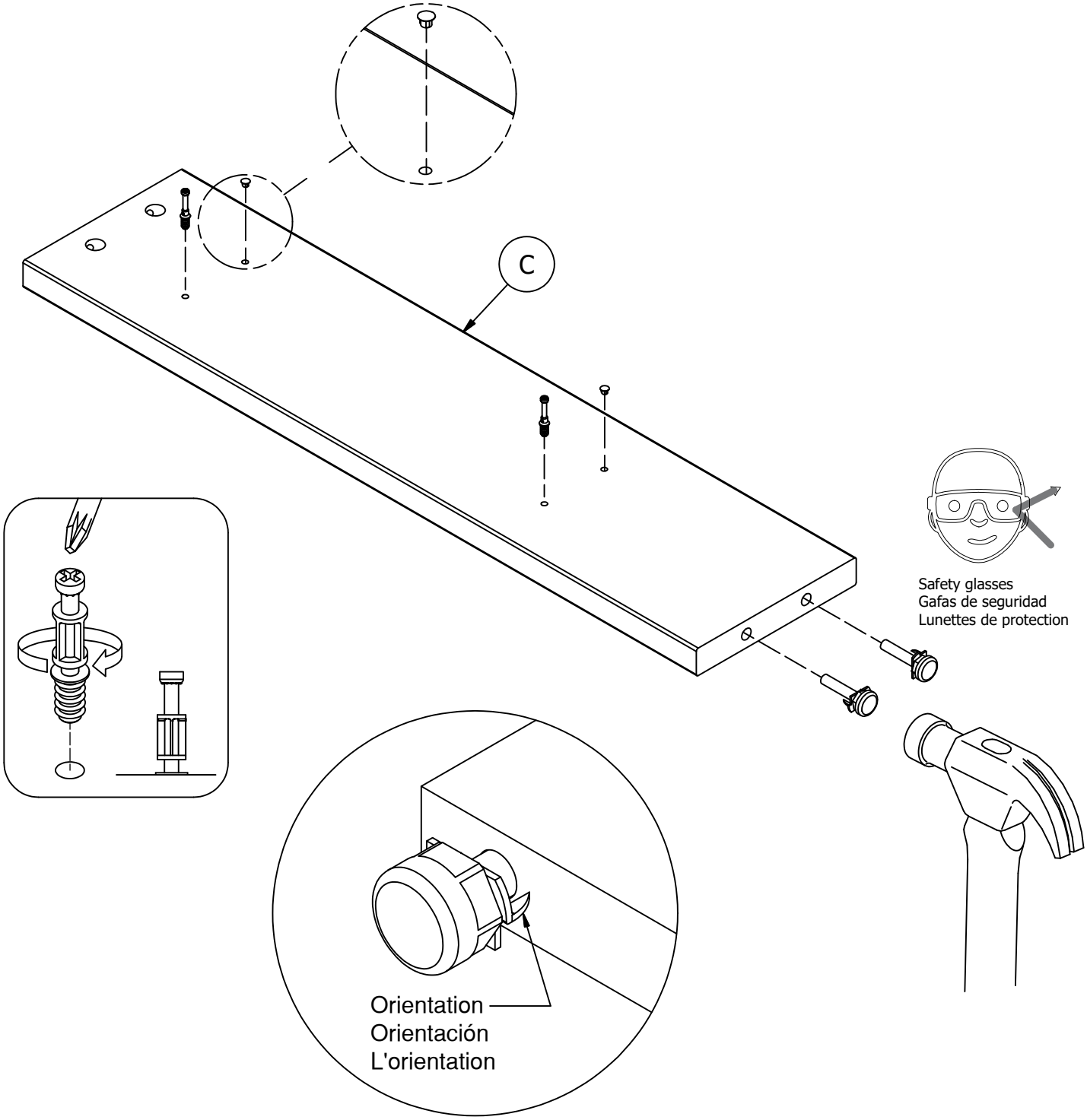

STEP-ÉTAPE-PASO
15

Assemble - Assembler - Assemblar

Team Lift
Esfuerzo de equipo
Effort d'équipe

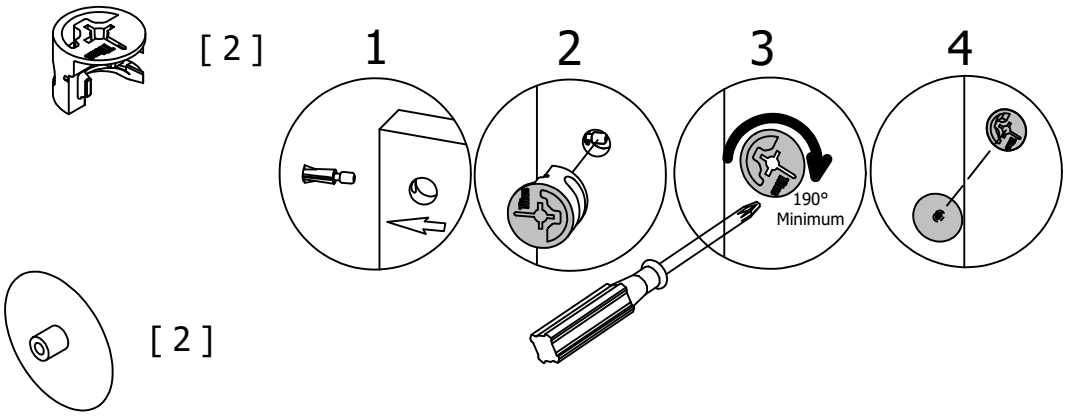

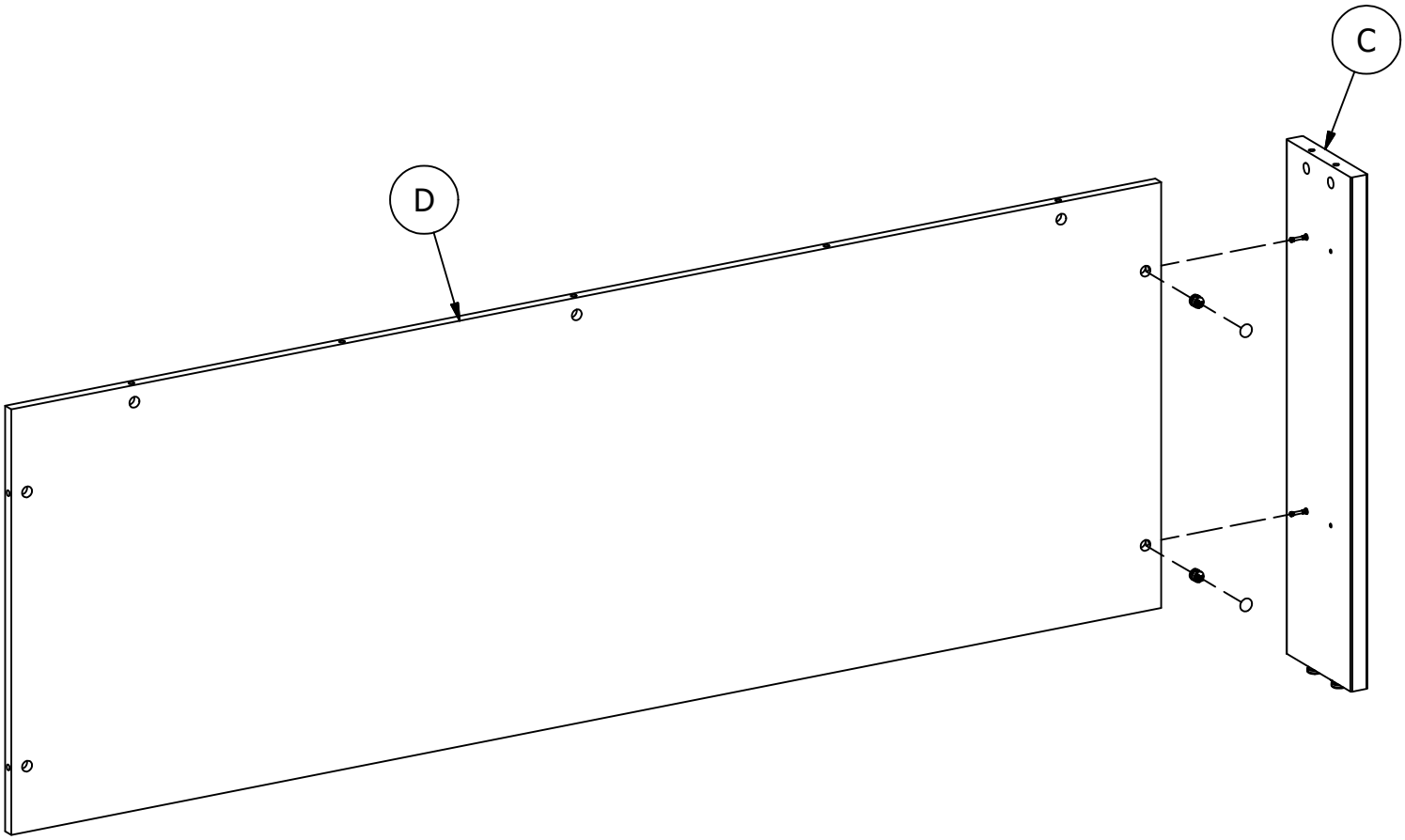

STEP-ÉTAPE-PASO
16

Prepare - Préparer - Preparar

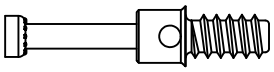
[2]

[2]
5mm

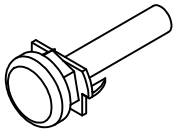
[2]

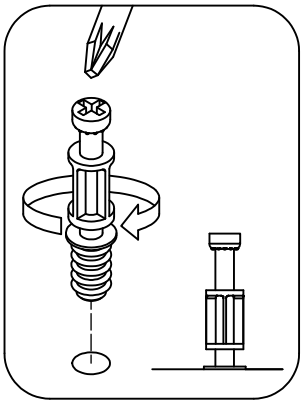

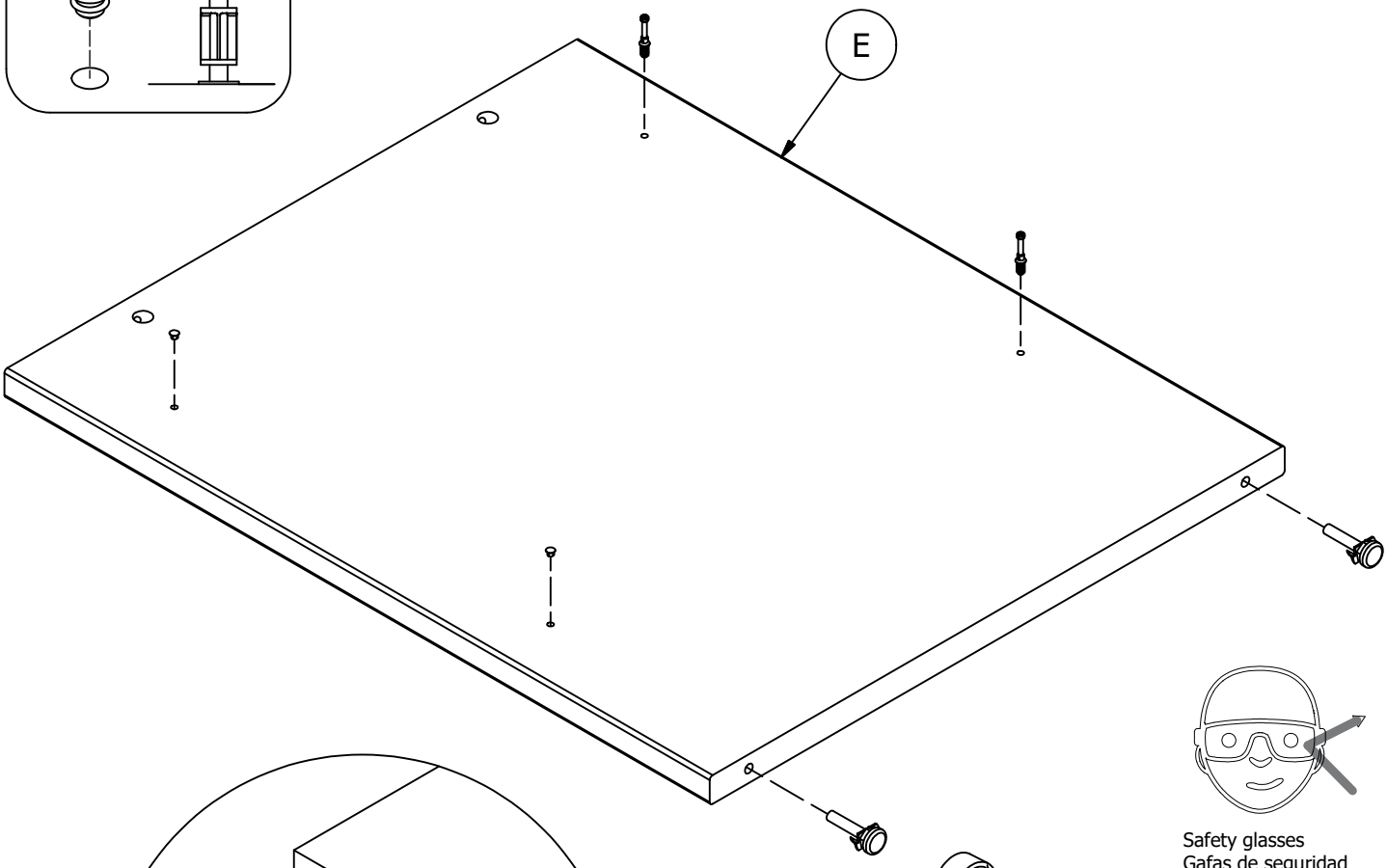

Safety glasses
Gafas de seguridad
Lunettes de protection

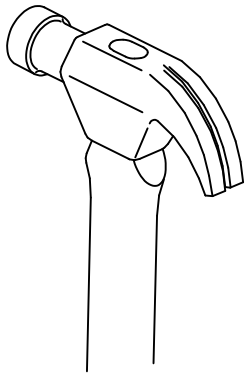

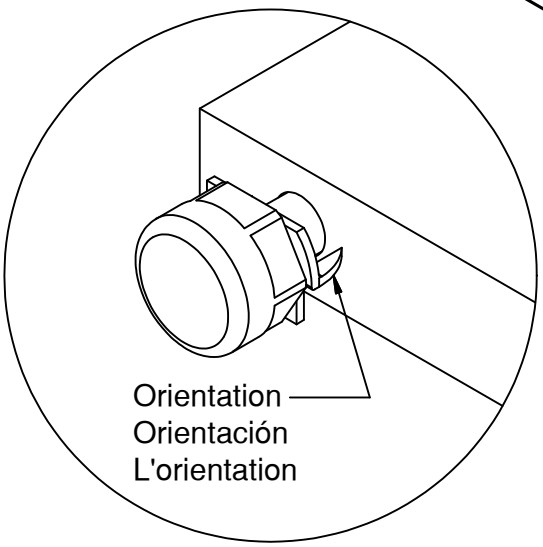

Assemble - Assembler - Assemblar

Team Lift
Esfuerzo de equipo
Effort d'équipe

[2]

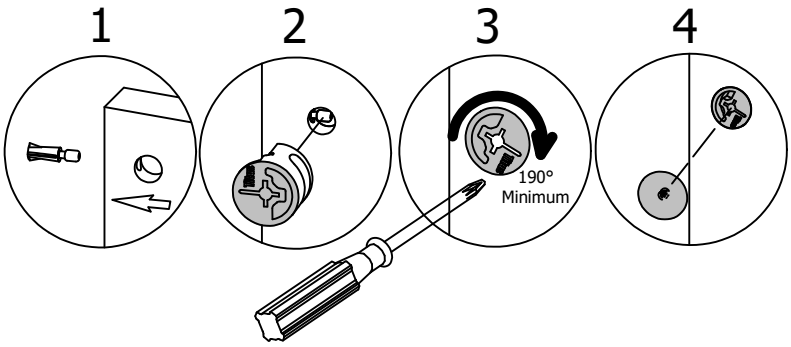

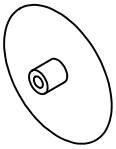

[2]

8 x 30

[2]

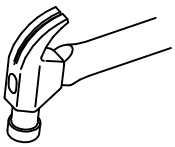

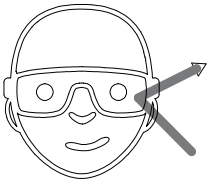

Safety glasses
Gafas de seguridad
Lunettes de protection

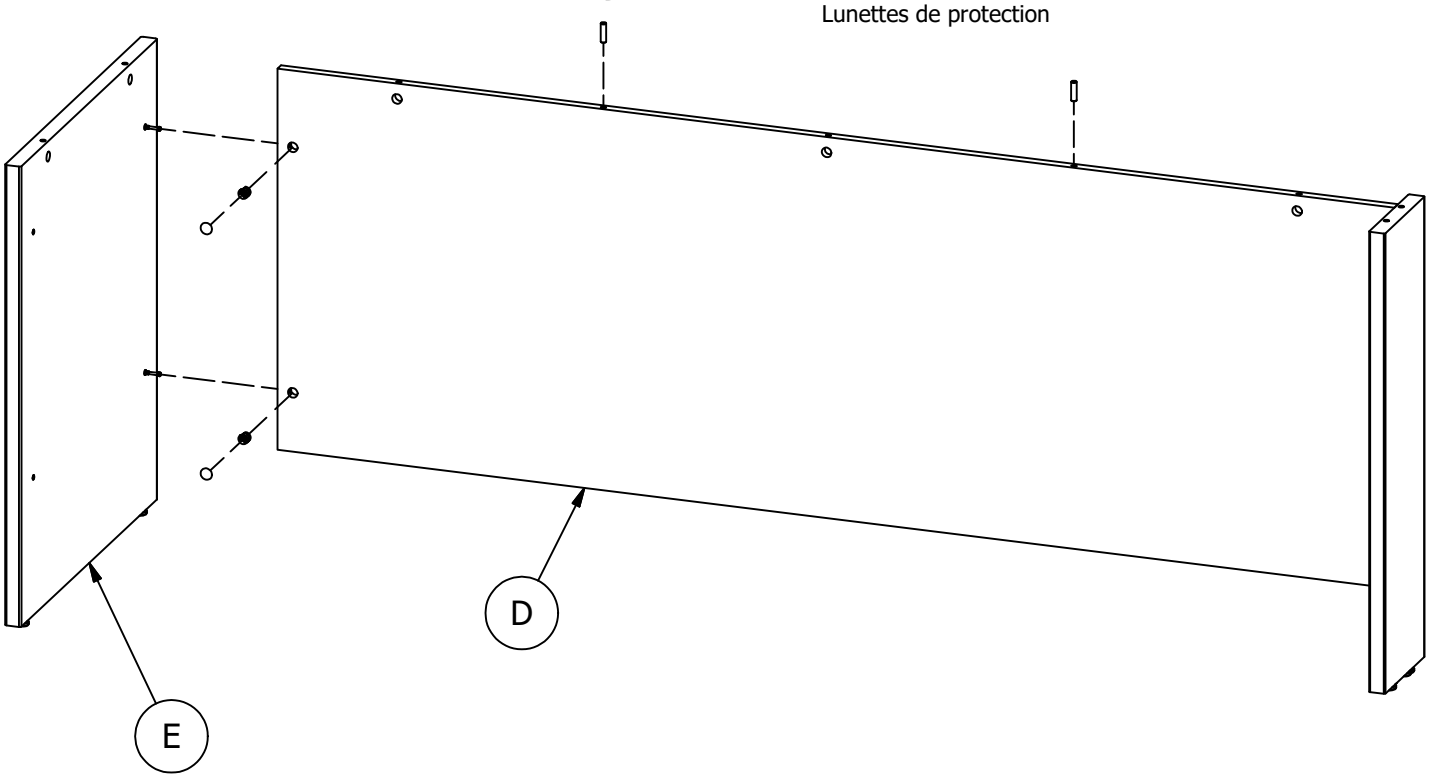

Prepare - Préparer - Preparar

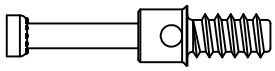

[6]

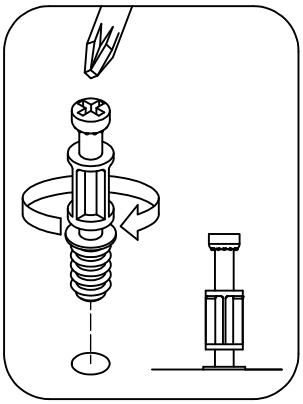

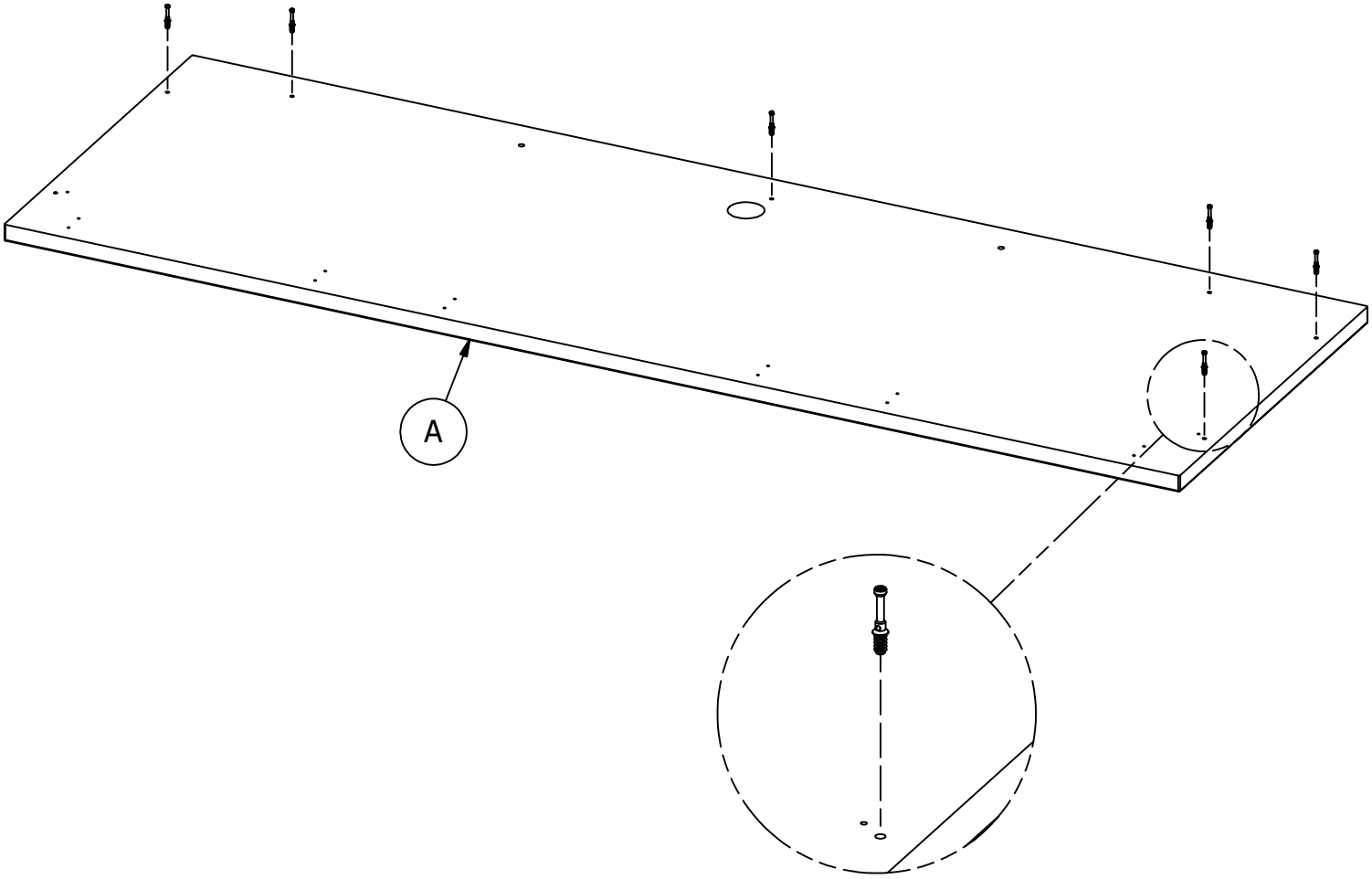

Assemble - Assembler - Assemblar

Team Lift
Esfuerzo de equipo
Effort d'équipe

[6]

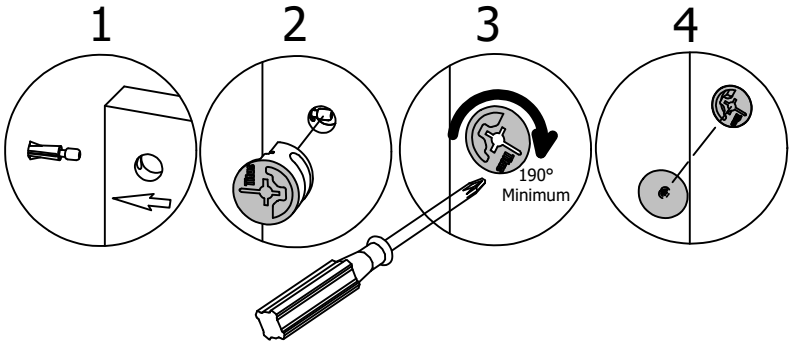

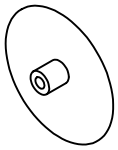

[6]

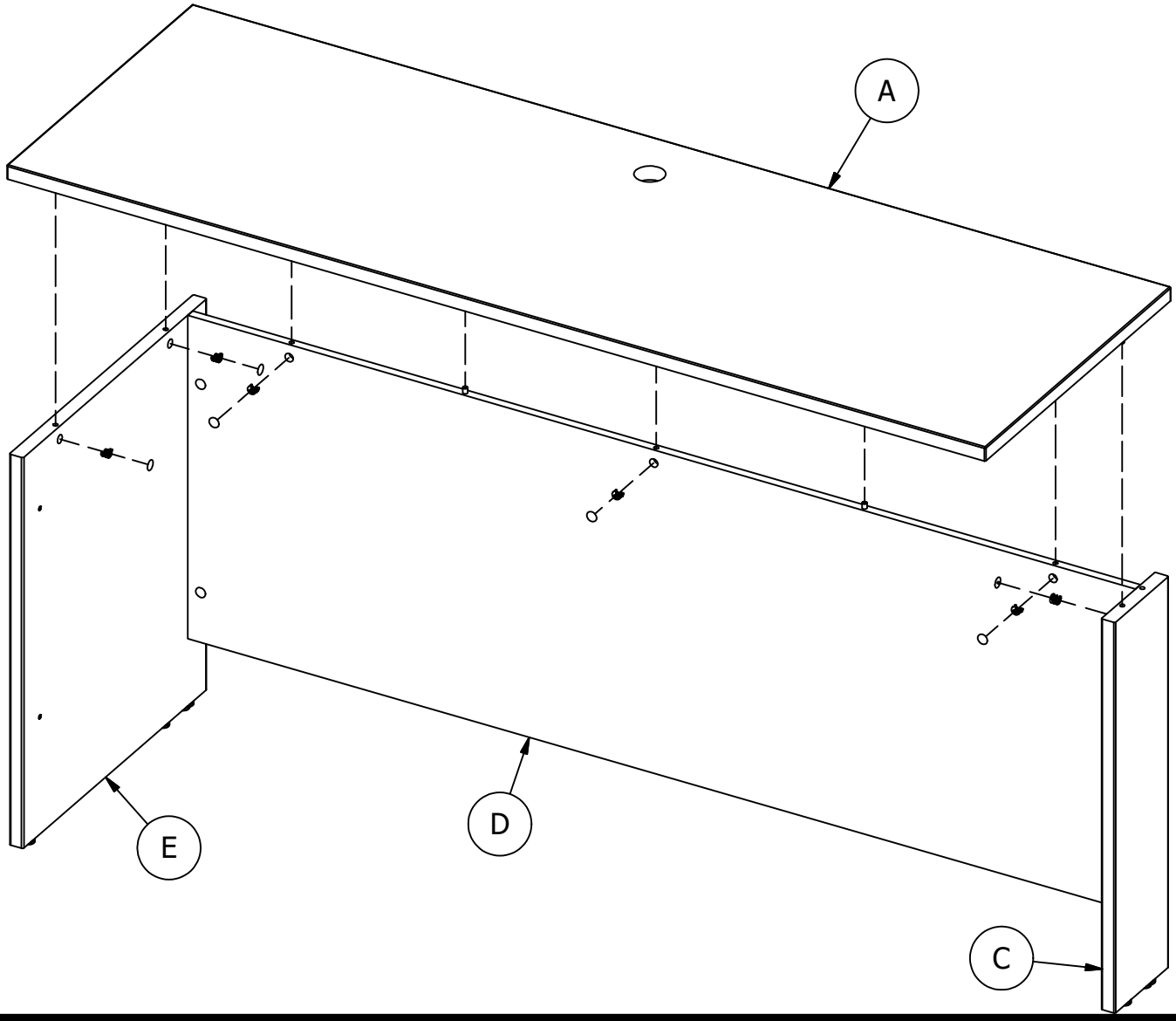

STEP-ÉTAPE-PASO
20

Install - Installer - Instalar

Team Lift
Esfuerzo de equipo
Effort d'équipe

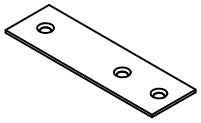

[1]

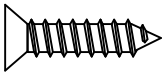

#10 x 3/4"

[3]

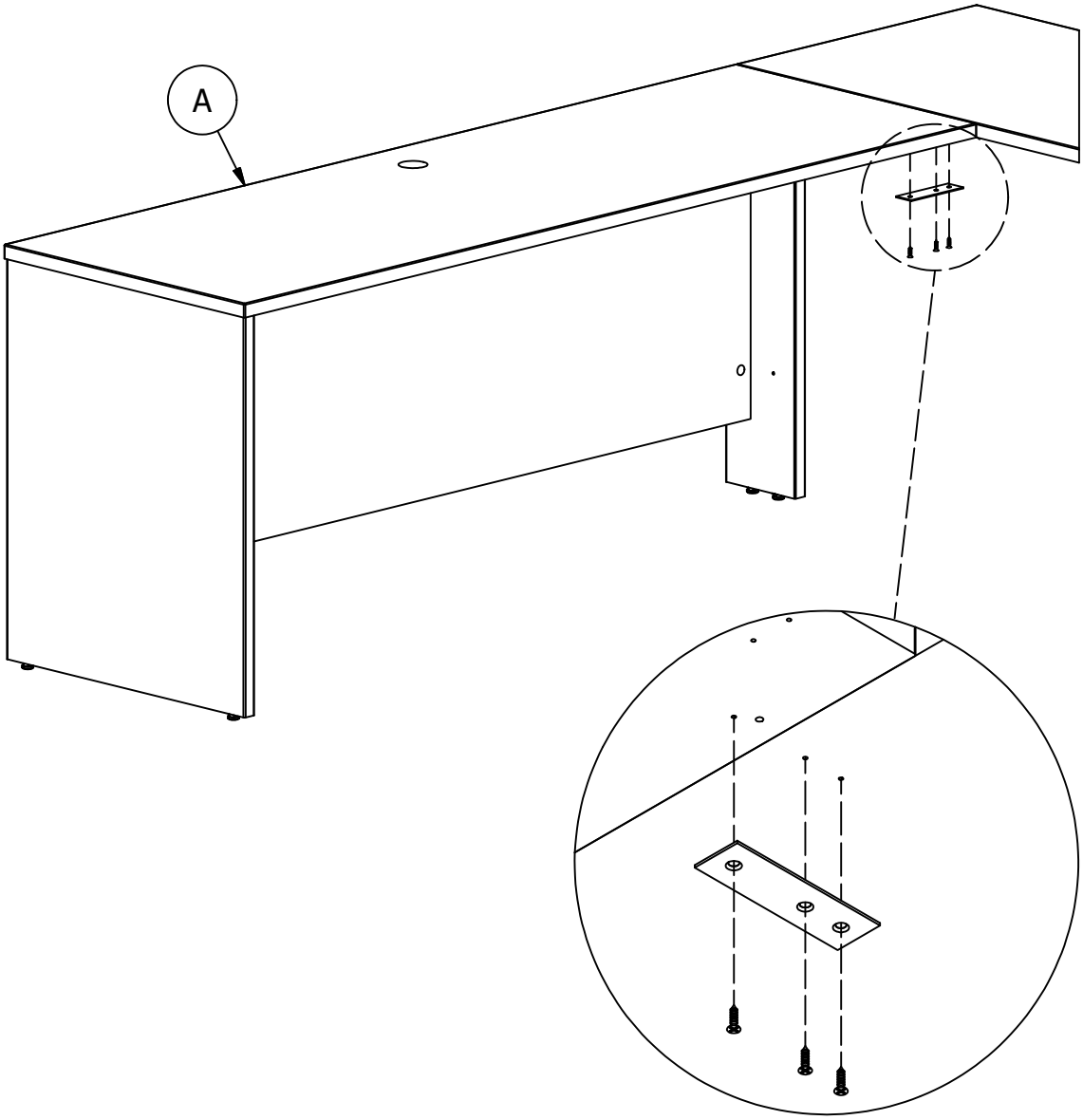

Load - Charge - Carga

Gently clean surfaces with a damp cloth.
Limpie suavemente las superficies con una esponja húmeda.
Nettoyer délicatement les surfaces à l'aide d'une éponge humide.

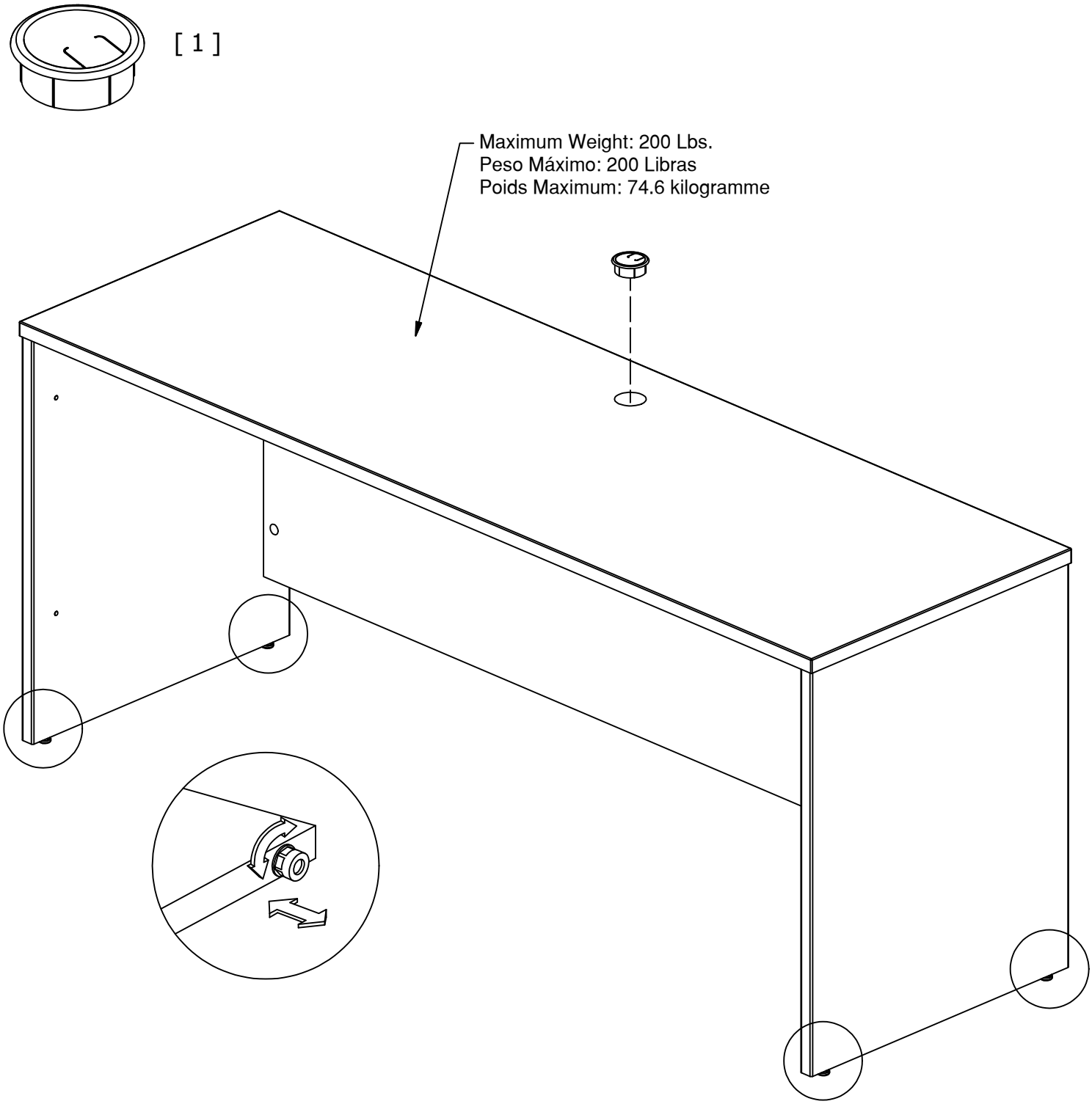

Quality and Safety Guidelines

These guidelines apply across the catalog — seating, tables and desks, storage and shelving, folding and stacking products, classroom and outdoor furniture, and other case goods. Please review this information in addition to the specific assembly instructions included with your product.

BEFORE YOU ASSEMBLE

- Unpack all parts and hardware and check them against the parts list before starting assembly.
- Read all instructions and warnings completely before beginning; assemble on a soft, protected surface.
- Use only the tools and hardware specified in the instructions; do not substitute sizes.
- Tighten all hardware securely but do not overtighten, and get a second person to help with large or heavy pieces.

GENERAL SAFETY & CARE

- Use this product only as intended by the manufacturer; this product is intended for indoor use unless labeled for outdoor/patio use.
- Follow all posted weight capacity limits and usage guidelines provided with the product.
- Do not use the product if any instability, damage, or unusual wear is detected; discontinue use immediately.
- Regularly inspect for loose hardware, worn components, cracks, or other signs of deterioration, and tighten hardware as needed; replace damaged or worn parts only with manufacturer-approved replacement parts.
- Keep children supervised around furniture and any moving components.
- Wipe down surfaces regularly with a soft, clean, lint-free cloth; for most materials, a cloth lightly dampened with mild soap and water is sufficient.
- Avoid harsh chemicals, bleach, ammonia-based cleaners, solvents, and abrasive scrubbers, which can damage finishes, fabric, and hardware.
- Blot spills promptly rather than rubbing, and dry surfaces thoroughly after cleaning; avoid saturating any material with water.
- Keep products out of direct, prolonged sunlight and away from heat sources to help prevent fading, warping, or cracking over time.

STORAGE, SHELVING & MOVING FURNITURE

- Remove contents before moving storage furniture, cabinets, dressers, desks, or shelving units.
- Use proper lifting technique and adequate assistance when moving heavy items; do not drag, push, or pull furniture unless it is designed for such movement.
- Follow all anti-tip and wall-anchoring instructions when provided, especially for tall or top-heavy pieces.
- Keep fingers, hands, and other body parts clear of hinges, drawer slides, lift mechanisms, and folding or adjustable features.

SEATING, FOLDING & ADJUSTABLE PRODUCTS

- Sit fully and properly within the seat area; keep chairs stationary when sitting down or standing up, and do not use seating as a ladder or step stool.
- Do not lean excessively backward, forward, or sideways, as this may result in tipping or loss of balance.
- For rocking, reclining, swivel, or height-adjustable products, use only smooth, controlled movements and avoid excessive force.
- For folding and stacking chairs and tables, confirm legs and locking mechanisms are fully extended and secured before each use, and do not exceed recommended stack height limits.

Warranty & Product Support

For maintenance instructions, replacement parts, warranty information, or product support, please contact **Customer Experience** — Email: customerexperience@theubiquegroup.com | Phone: 866-552-2810.

Additional product information and warranty details can be found at www.theubiquegroup.com.