Thank you for your purchase!

Chevron Detail Twin Platform Bed

ASSEMBLY INSTRUCTIONS

Before You Begin: **Phillips screw driver required for assembly (Not Included).**
Please identify all component parts and hardware pieces required before you begin. Carefully remove all of the components from the packaging and set aside for assembly. Assemble on a soft surface to prevent scratching during assembly.

Caution:
Tighten all components securely before use. Failure to do so may result in personal injury.
DO NOT use any sharp objects to open plastic wrapped components as damage to product or components may result.

Warning:

CHOKING HAZARD - Small Parts. Adult Assembly Required.

DO NOT ALLOW CHILDREN TO CLIMB ON FURNITURE

Serious or fatal injuries can occur from furniture tipping over. You must install Tipping Restraint Hardware (where included) to help prevent the unit from tipping and causing accidental injury, instability, death or damage.
The tipping restraint is intended only as a safety measure, it is not a substitute for proper adult supervision.

To help prevent furniture from tipping over it must be permanently attached to the wall. Anti-Tip Safety Wall Straps suitable for the unit weight and wall materials (if not included) should be purchased and installed.

Customer Service Email : CustomerExperience@theubiquegroup.com | Phone: 866-552-2810
196861137228 | 196861137235

★★★★★

Congratulations!

You just purchased a piece of happiness. At Ubique Group, we believe you can transform your spaces into the most inspired places with furnishings that are the perfect combination of form, function and style. As original innovators of online furniture retail, we offer the best selection of popular, contemporary styles at cool, comfortable prices. And, with decades of proven shipping and packaging expertise, our Extended Quality Checklist ensures a rewarding, hassle-free experience time and time again. It's just what you need to bring your vision to life.

Thank you & Enjoy!!

your friends at Ubique Group

LIKE IT!

Share it on social & Tell a friend! #Spaces2Places

LOVE IT!

Write an online product review where purchased

NOT SURE?

Let us help! Contact our customer support.

Have a question, concern or simply need a hand? Your satisfaction is our top priority.
Contact us at 866-552-2810 or customerexperience@theubiquegroup.com. We're here to help!

Browse Our Branded Collections

There's something for everyone inside our family of brands.

FLASH FURNITURE®

MERRICK | LANE

Taylor & Logan

Emma+Oliver®

MASADA RUGS

HBCY CREATIONS

BlackArc®

Visit www.theubiquegroup.com/brands or scan this code.

ubique.
GROUP

We pride ourselves on providing an excellent customer experience starting right here with your package and instructions. Everything you need should be right where you need it, so you can get to enjoying your new item ASAP. But despite our best efforts, sometimes "slips happen." If you need any support, from replacement parts to recommendations, please reach out to our wonderful customer support team at 866-552-2810 or customerexperience@theubiquegroup.com. We're here to help!

EVERY UBIQUE GROUP PRODUCT

Quality & Durability Tested

Packaged with Care

Shipped from our U.S. Facility

Designed for Easy Assembly

Ethically Sourced

Please visit https://www.theubiquegroup.com/warranty for complete warranty information.

Read this manual before using this product. Failure to follow the instructions and safety precautions in this manual can result in serious injury or death. Keep this manual in a safe location for future reference.

Parts List

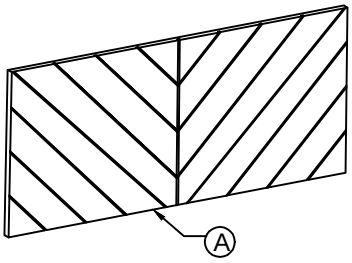

Headboard Panel x 1

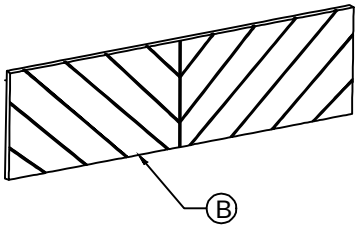

Footboard Panel x 1

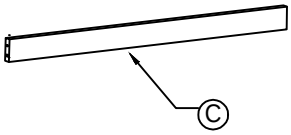

Headboard Support x 1

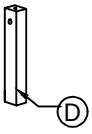

Support Leg x 2

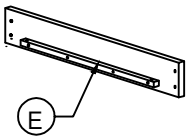

Side Rail (L) x 2

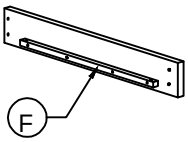

Side Rail (R) x 2

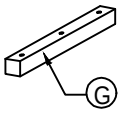

Support Bars x 2

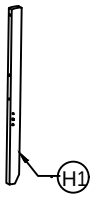

HB Post Left x 1

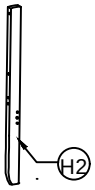

HB Post Right x 1

FB Post Left x 1

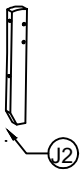

FB Post Right x 1

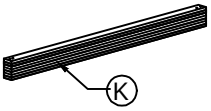

Bed Slat x 2 sets

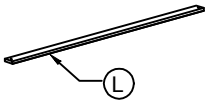

Bed Slat (Center) x 1pc

Hardware List

1 M6 x 15mm JCBC x 8

2 M6 x 40mm JCBC x 8

3 M6 x 50mm JCBC x 4

4 M6 x 70mm JCBC x 8

5 M6 x 90mm JCBC x 10

6 M6 x 100mm JCBC x 2

7 Barrel Nut x 20

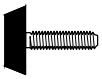

8 Adjustable Foot x 2

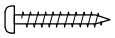

9 Wood Screw (M4 x 32mm) x 20

10 Wood Dowel (10x40mm) x 6

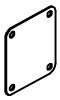

11 7001 Metal Bracket x 2

12 Flat Washer (M6) x 6

13 Flat Washer (M8) x 4

14 JCN NUT x 4

15 M4 Allen Key x 1

STEP 1:

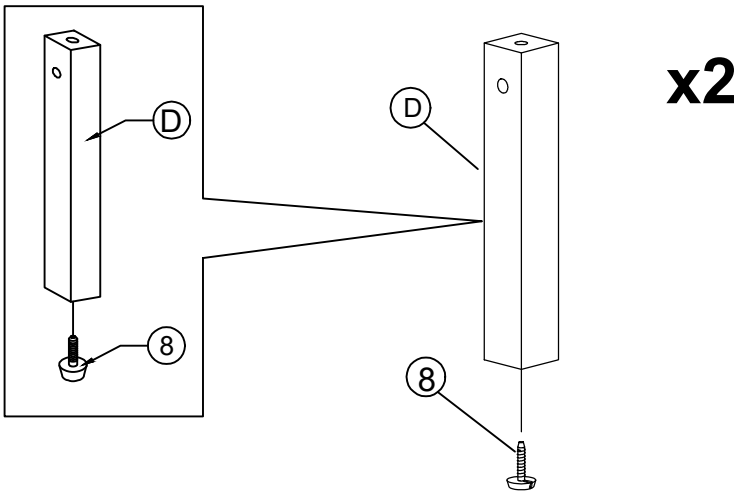

x2

STEP 2:

Back View

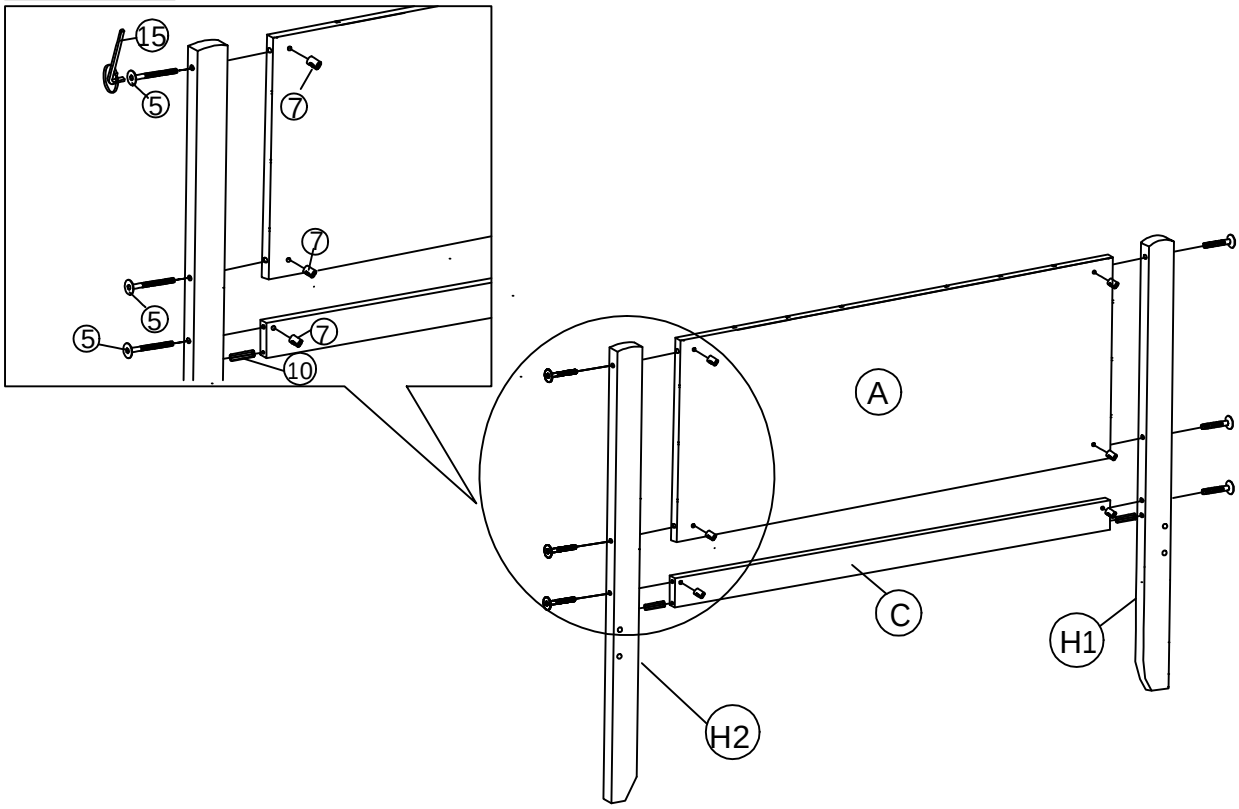

STEP 3:

Back View

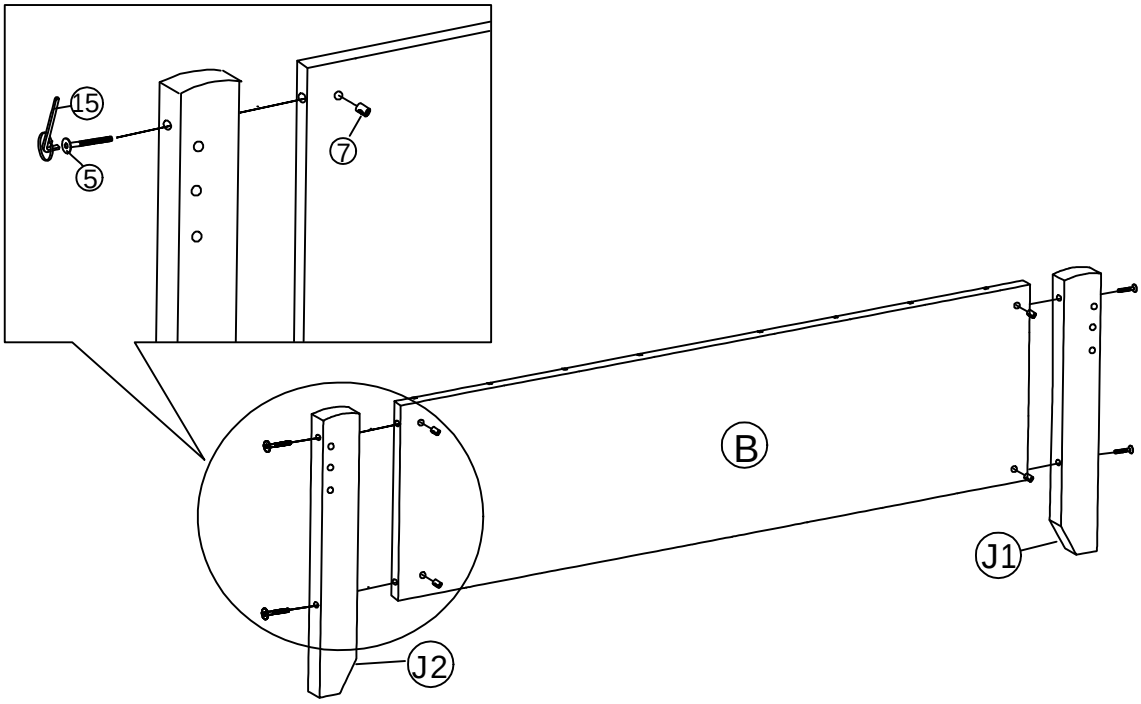

STEP 4:

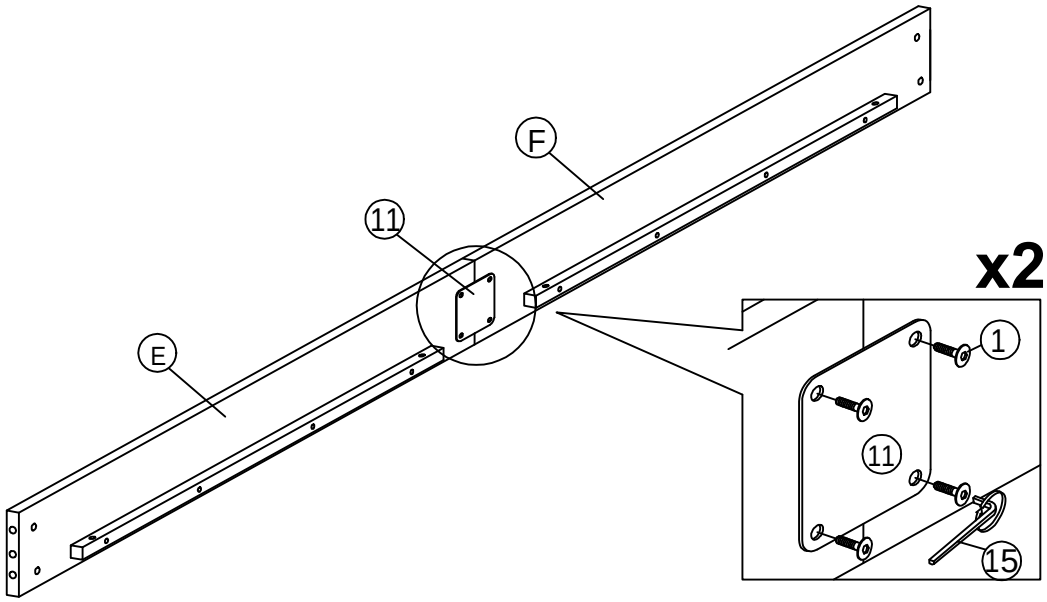

STEP 5:

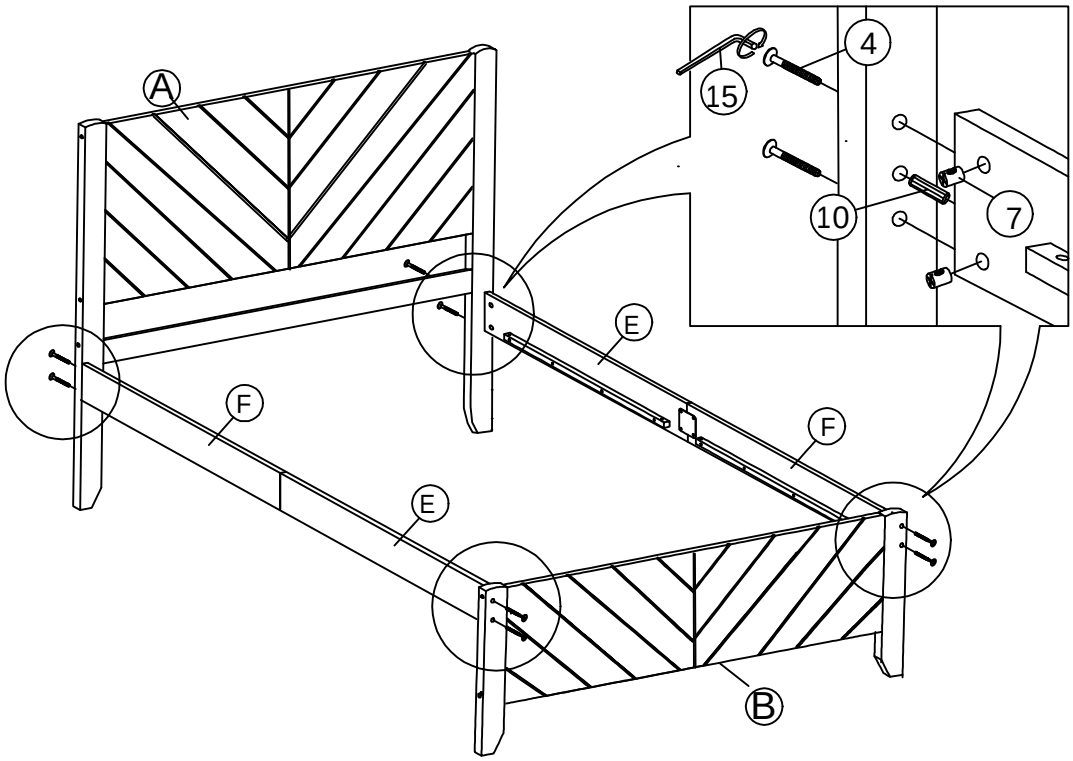

STEP 6:

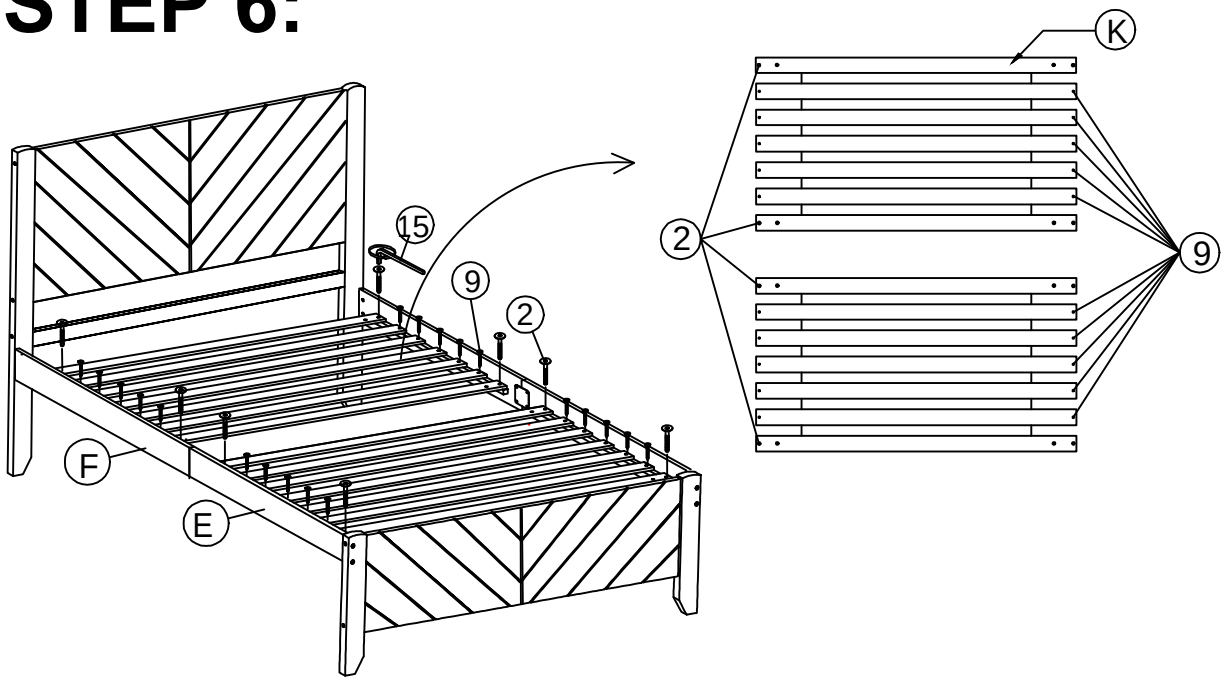

STEP 7:

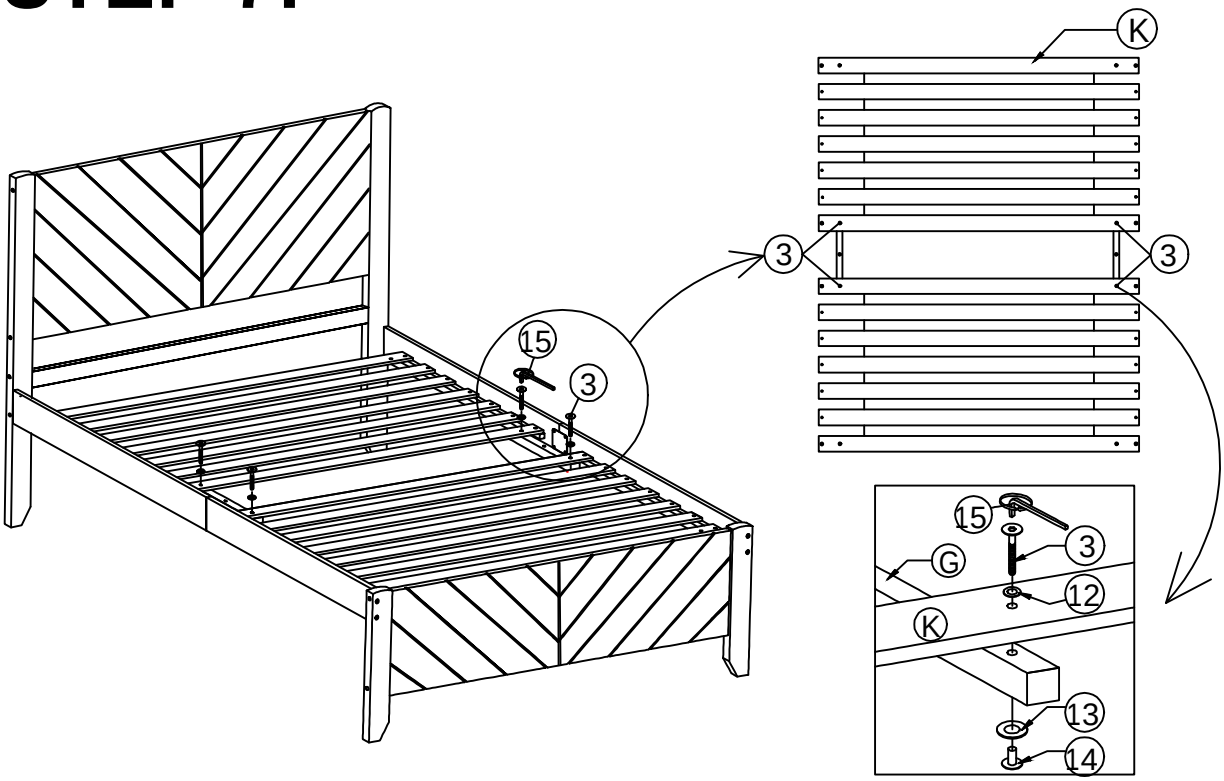

STEP 8:

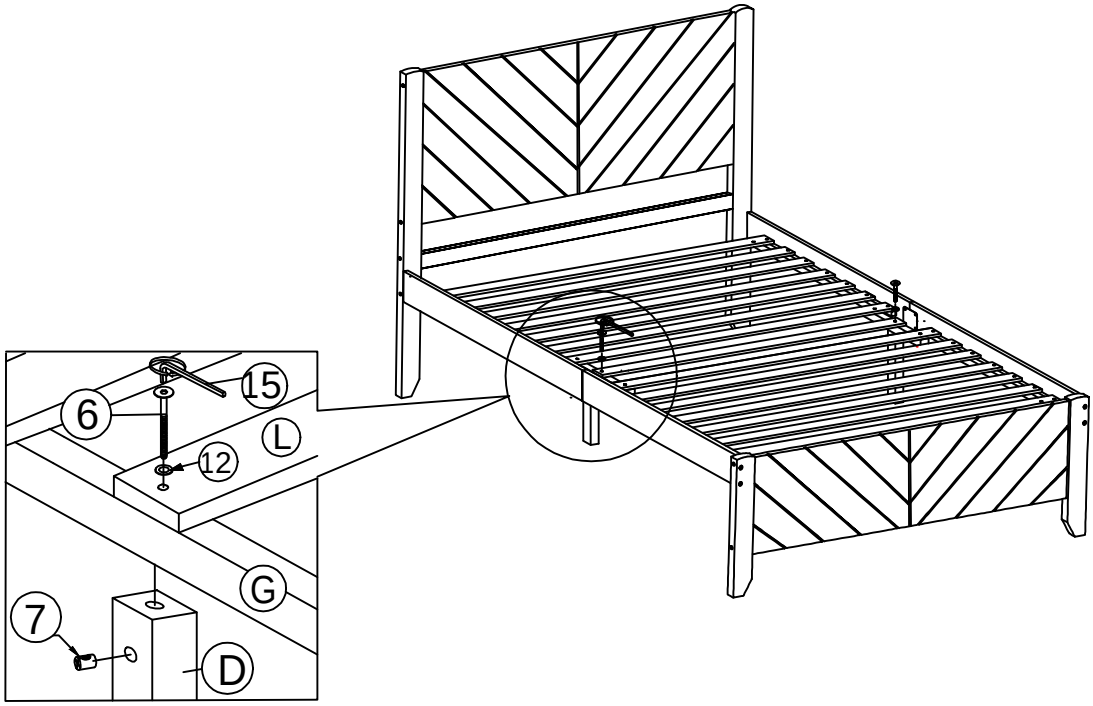

Quality and Safety Guidelines

- Please use this item on a stable, level surface only. If any of the legs are not contacting the flooring surface, do not use. Do not use this item if any instability is detected.

- Carefully follow all of the assembly instructions. If all of the parts are not provided, please do not use this item. Please email us at customerexperience@theubiquegroup.com or call 866-552-2810 for assembly instructions.

- This item is intended for indoor use. Store indoors also.

- Do not drag or slide the bedframe when repositioning it. Team lift the bedframe and move it carefully without sliding the legs in any manner.

- This item is intended for lying down, do not jump, climb, hang or stand on this item.

- Do not use this bed with infants or Children under **6** years old. Adult supervision required.

- Do not attach or hang anything from any part of the bedframe.

- Do not use this item without an approved mattress.

- For product longevity, product safety and product integrity, please email us at customerexperience@theubiquegroup.com or call 866-552-2810 for storage instructions.

- Please visit www.theubiquegroup.com for our product warranty details or email us at customerexperience@theubiquegroup.com or call 866-552-2810.

- For maintenance instructions and replacement parts, please email us at customerexperience@theubiquegroup.com or call 866-552-2810.

- Please follow the static and dynamic weight capacity limits provided on this item. If you are unsure of the weight capacities for this product, email us at customerexperience@theubiquegroup.com or call 866-552- 2810.

- Please inspect this product regularly to make sure there are no damaged or worn parts. Also inspect to make sure all hardware is tightened correctly and securely. For inspection instructions, please email us at customerexperience@theubiquegroup.com or call 866-552-2810.

- If any parts are damaged or worn, please stop using the product. Repair this product with manufacturer supplied parts only.