Low Profile Acrylic Shower Base

Shower Base Dimensions and Installation Instructions

PLEASE REVIEW THIS ENTIRE MANUAL PRIOR TO INSTALLATION

© 2026 All Rights Reserved

Single Threshold Left, Center, Right Drain
(Certain models do not have all 3 drain locations)

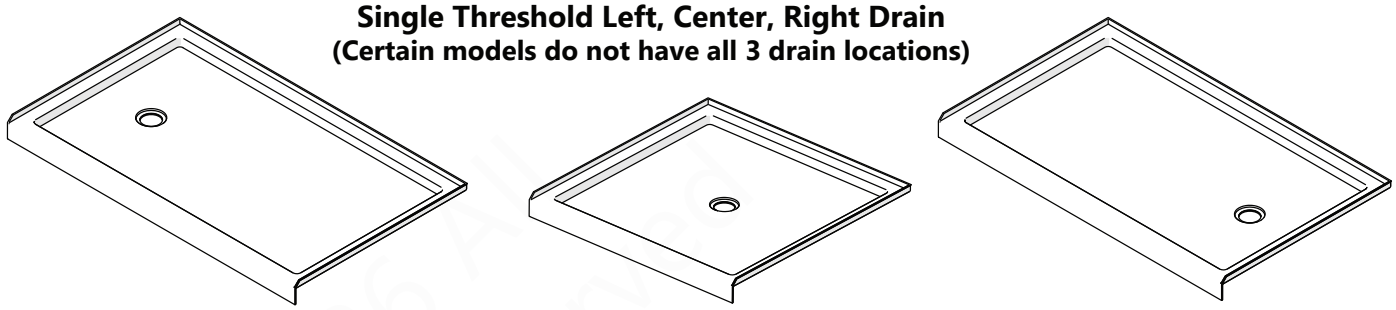

Neo Angle

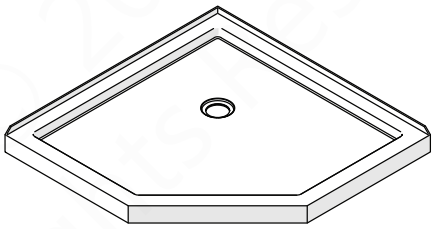

Quarter Round

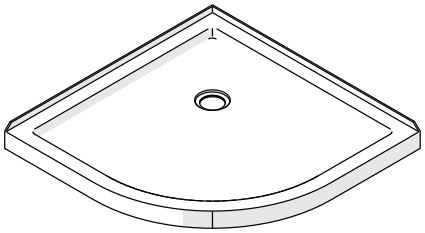

Double Threshold Left, Corner, Right drain

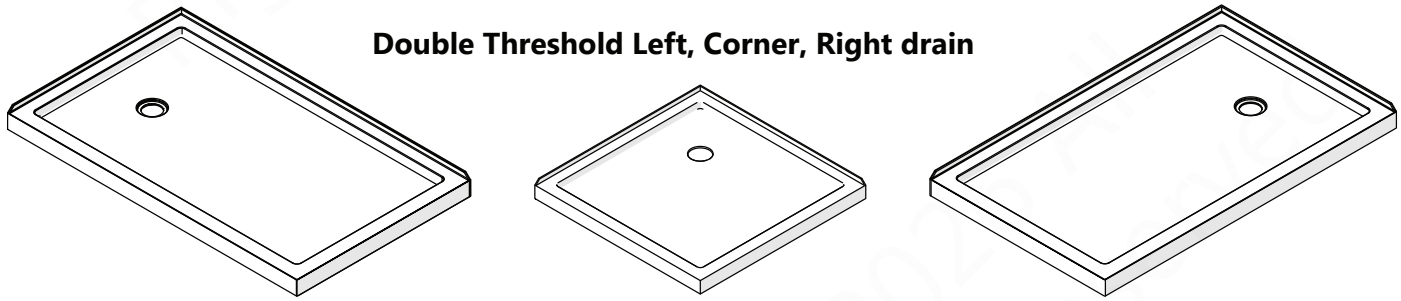

Instructions en français

Pour consulter les instructions d'installation en français, veuillez scanner ce code QR

IMPORTANT!
The manufacturer reserves the right to alter, modify or redesign products at any time without prior notice for the purpose of product improvement and customer experience.

© 2026 All Rights Reserved

© 2026 All Rights Reserved

© 2026 All Rights Reserved

Record the following purchase information for your records or in the event you need to contact the manufacturer:

Purchase Order Number _____

Store/Vendor Purchased From _____

Installation Date _____

OD Number (Optional) _____
*found on shipping box/label

Installed by _____

SKU Number _____

Table of Contents

Section Title	Page #
Warnings and General Preparation	2
Tools and Materials	3
Model Specific Preparation	4-5
Model Types and Dimensions Guides	6-13
Detailed Cross Section Diagram	14
Installation Steps	15-23
Product Maintenance	25

© 2026 All Rights Reserved

TIP - for ease of installation.

CORRECT - recommended.

NOTE - take note of special feature; additional information.

INCORRECT - not recommended.

REQUIRED - requires special attention; signifies a warning.

Average Installation Time

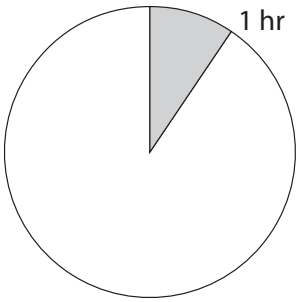

© 2026 All Rights Reserved

Warning Disclosure Statement

IMPORTANT

- The manufacturer reserves the right to alter, modify or redesign products any time without prior notice for product improvement and customer experience.
- This product should be installed by someone familiar with the construction requirements for this type of project and the care necessary for the safe installation and operation of the product.
- The safety of any installation is the responsibility of the installer.
- Professional installation recommended. *(All Models)*
- Professional installation required.
- To prevent damage or serious injury, Do Not lean against the installed panel/door/glass.
- To prevent damage or serious injury: Do Not attempt to lift or move a heavy lite of glass alone. Use an assistant and/or a professional grade glass suction cup.
- The installation of some models may require drilling down into the threshold. Contact the manufacturer of the base, tub, or threshold material with any questions regarding the drilling of holes into their product.
- All drawings in this installation manual are for illustrative purposes only and are not drawn to scale.

TEMPERED GLASS WARNING

- Your Shower Door Glass Could Shatter Without Warning if Improperly Installed or Mishandled
- Do Not install or operate a shower door if the glass has chipped corners, slivered edges or is otherwise damaged and/or has been dropped or banged into a hard surface such as tile, marble or glass.
- **The main causes of tempered glass breakage are:**
  - Improper handling, storage or installation
  - Misuse/abuse
  - Lack of maintenance
  - Failure to replace damaged glass
  - **Improper handling during storage, unpacking and installation:**
  - Corners and edges are the most susceptible area to damage on a lite of tempered glass and should be protected and handled with care during storage, unpacking, installation and operation. A concentrated point of pressure or impact with a surface harder than itself may cause the tempered glass to shatter. The tempered glass may release immediately, within several hours or even days later.
  - **Incorrect installation of door hardware, rollers, hinges, channels, stopper or glass:**
  - Improper installation may include: loose hardware and/or lack of proper gaskets between the hardware and glass. Additionally, improper alignment of guide rails, wall profiles or other hardware during installation or operation may place stress on the glass edges and cause it to break.
  - This product must be installed by a professional and experienced installer familiar with the safe handling of tempered glass.
  - **Improper use of this product:**
    - Aggressively opening or closing the door may cause trauma to the glass, which can lead to breakage. This may occur immediately or hours or even days later.
    - **The shower door hardware and glass should be inspected periodically:**
      - Instruct the homeowner how to perform a periodic inspection of the shower hardware and glass - some minor adjustments may be necessary based upon the use (or misuse) of the shower door. Ensure that the hardware remains tight and that the door alignment and operation are correct. Any adjustments should be made upon discovery to prevent damage to the product.
      - Additional considerations should be given to the installation of frameless tempered glass products in households with young children or an elderly person due to an increased chance of improper handling. In such cases, alternatives such as shower curtains or grab bars should be considered.

GENERAL PREPARATION

- After opening all boxes and packages, read this introduction carefully. Check that all the items are included in the package by marking off the components on the **"Detailed Diagram of Product Components"** page. Examine all boxes and packages for shipping damage. If the unit has been damaged, has a finishing defect, or is missing parts; please contact the manufacturer within 3 business days of the delivery date.
  Please note that the manufacturer will not replace any damaged products or missing parts free of charge after 3 business days or if the product has been installed. Please contact the manufacturer if you have any questions.
- **Please note that you should refer to your local building codes with questions on installation compliance standards. Building and plumbing codes may vary by location, and the manufacturer is not responsible for code compliance standards for your project and will not accept any returns on that basis.**
- If this unit is going to be installed in a new construction, install all the required plumbing and drainage before installing the shower. **Use a competent and licensed (if required by local code) plumber for all plumbing installation.**
- Make sure that prior to beginning the installation, the surfaces are leveled and solid and will be able to support the total weight of the unit. Also make sure the walls are at right angles. Irregular installation surface level, radius corners or improper angle of side walls will result in serious problems for your installation. Please note that some adjustments and drilling will be necessary during the installation process.
- Protect all primary surfaces of the product during installation. Never set your glass down directly onto a tile floor. Leave corner protectors in place until it is necessary to remove them. Always use a piece of wood or cardboard to protect the bottom edge and corners of the glass prior to and during installation.
- This unit must be installed upon a finished threshold and against finished walls.
- *Shower doors are not designed to be installed into a fiberglass surround due to the radius corners and lack of a solid surface to mount the hardware.*

WARNING: TO AVOID THE RISK OF DAMAGE OR INJURY:

- **Follow all recommendations and requirements as shown in the installation instructions.**
- Perform a thorough inspection of the glass and all parts for any damage prior to installation. Any damage to tempered glass can cause breakage.
  Do Not install damaged glass!
- Do Not install or operate a shower or tub door if the glass has chipped corners, slivered edges or is otherwise damaged. Do Not install or operate a shower or tub door that has been dropped or banged into a hard surface such as tile, marble or glass.
- **CAUTION:** Contact with any hard surface can damage tempered glass and cause it to shatter.
- This product uses tempered glass. Glass cannot be cut after it has been tempered.
  Do Not attempt to cut tempered glass.
- Glass Shower doors, Tub doors, Inline panels, and Return panels can shatter due to improper handling or lack of maintenance. Conduct periodic inspections of glass and all parts for possible damage, missing or loose parts.
- Always wear proper safety equipment such as: safety goggles, work gloves and appropriate footwear during the installation process.
- **WARNING. Risk of leakage and/or damage.** Follow all instructions regarding the application of silicone sealant or caulk. Allow 24 hours for the sealant to cure before the initial use of the shower or tub product. Follow the silicone manufacturer's recommendations regarding the use of their product.

- **Thoroughly read these instructions before installing or using this product.**
- **Leave this manual for the end-user of the product.**

This product should be installed by someone familiar with the construction requirements for this type of project and the care necessary for the safe installation and operation of the product

Professional Installation Recommended

Tools

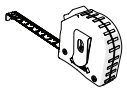

Tape Measure

Pencil

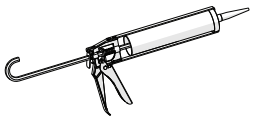

Caulk Gun

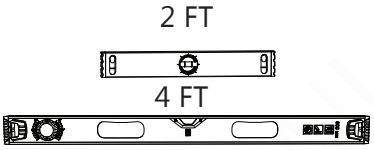

Levels

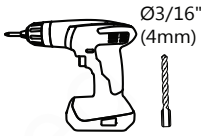

Power Drill

Screw Gun

Materials

OPTION # 1

OPTION # 2

Drain Assembly

Mortar Mix
(option # 1)

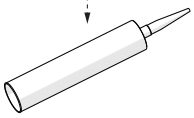

Acrylic-Safe
Adhesive
(*optional*)

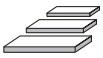

Wood Shims
(Various Sizes)

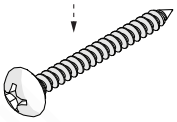

1-1/4" Stainless Steel
Corrosion-Resistant
Truss Head #8 Screws

NOTE: Some shower base models are sold as a kit with an option to purchase a compatible drain assembly with the shower base. If you purchased a kit with a drain assembly, the drain will be packaged in the same box as the shower base.

- ☑ Verify that the correct model size has been ordered; measure the opening before proceeding with the installation.
- ☑ Confirm that the opening is plumb and that the sub-floor is level.
- ☑ Make sure that all required plumbing and drainage is installed before installing the product.
- ☑ Purchase all required materials needed for your specific installation type.

NOTE

Unpack your unit carefully and inspect it. If any parts are damaged or missing, please contact the manufacturer for replacement. The shipping boxes may contain extra parts not used in your model configuration. Retain these instructions for future reference.

© 2026 All Rights Reserved

© 2026 All Rights Reserved

Shower Bases for Alcove Installation
(Single Threshold)

When installing an alcove shower base, consider how the **total thickness of the wall treatment (wallboard tile, acrylic walls, etc.) will affect the finished opening size for a shower door.** Always order a shower door based on the **finished opening dimensions after the finished wall treatment has been installed.**

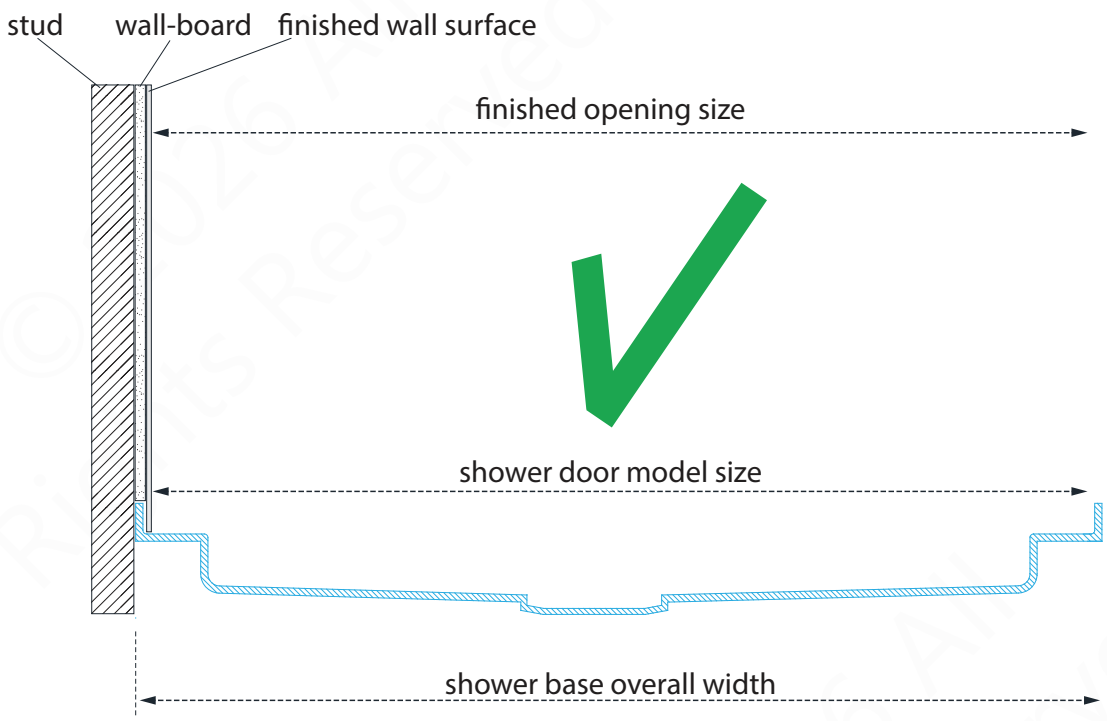

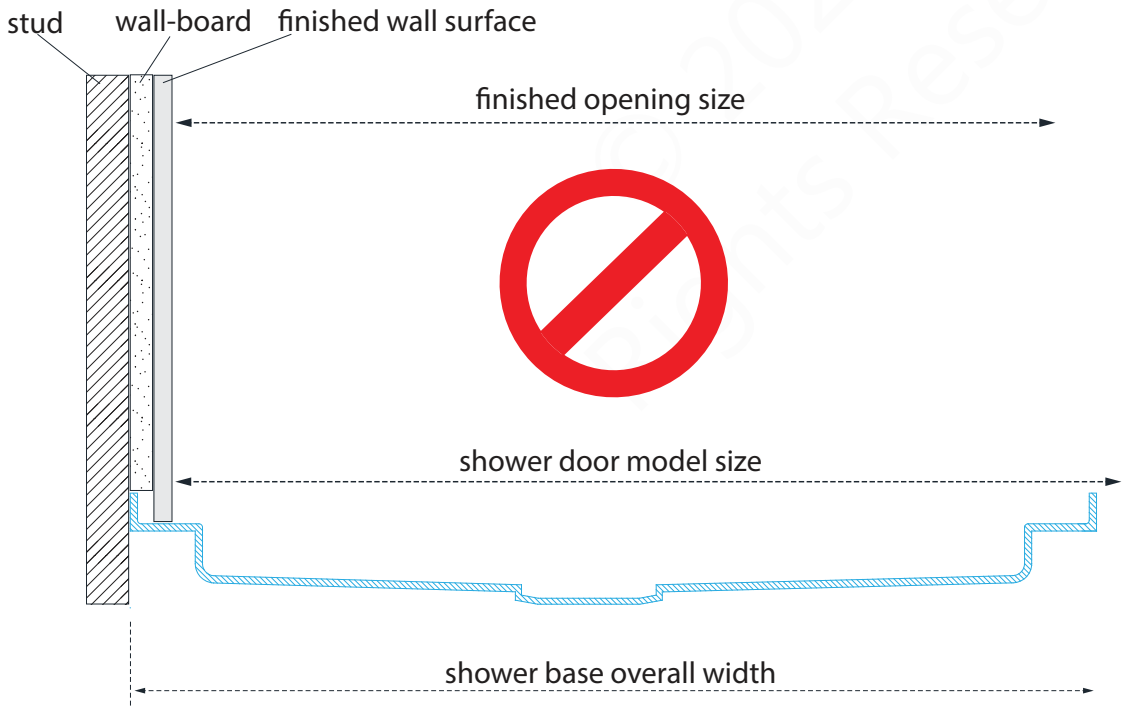

Shower Bases for Corner Installation
(Double Threshold, Neo Angle, Quarter Round)

When installing a shower base designed for corner installation, consider how the **total thickness of the wall treatment (wallboard tile, acrylic walls, etc.) will affect where the shower enclosure will sit on the threshold.** Always order a shower enclosure based on the **finished opening dimensions after the finished wall treatment has been installed.**

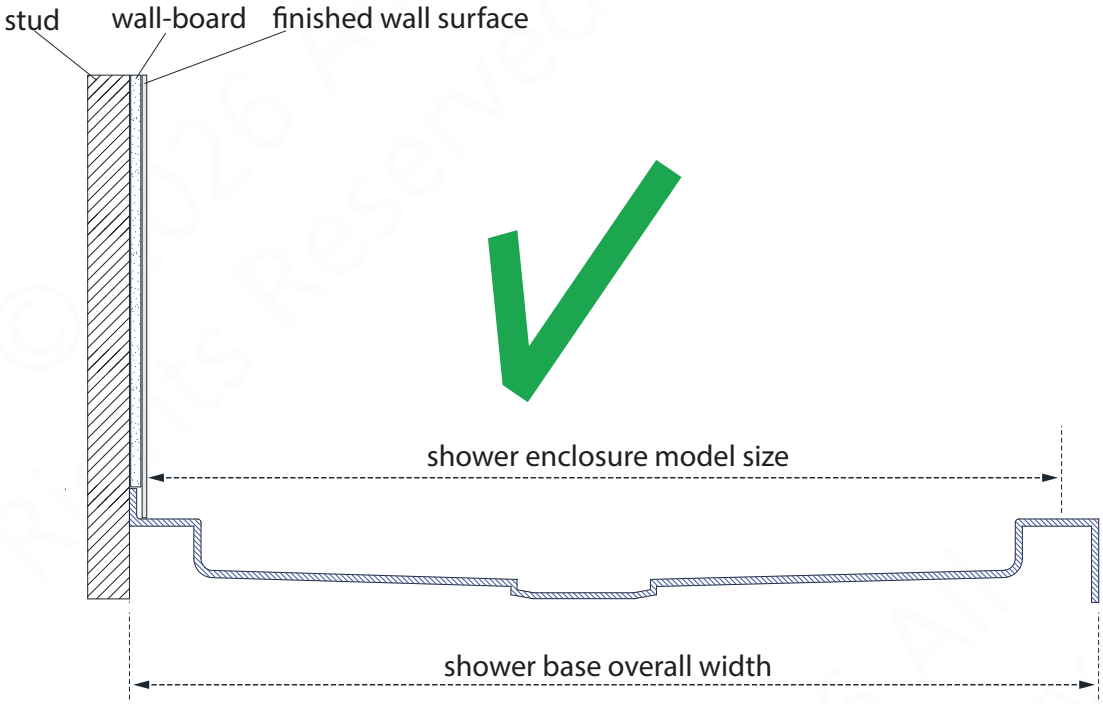

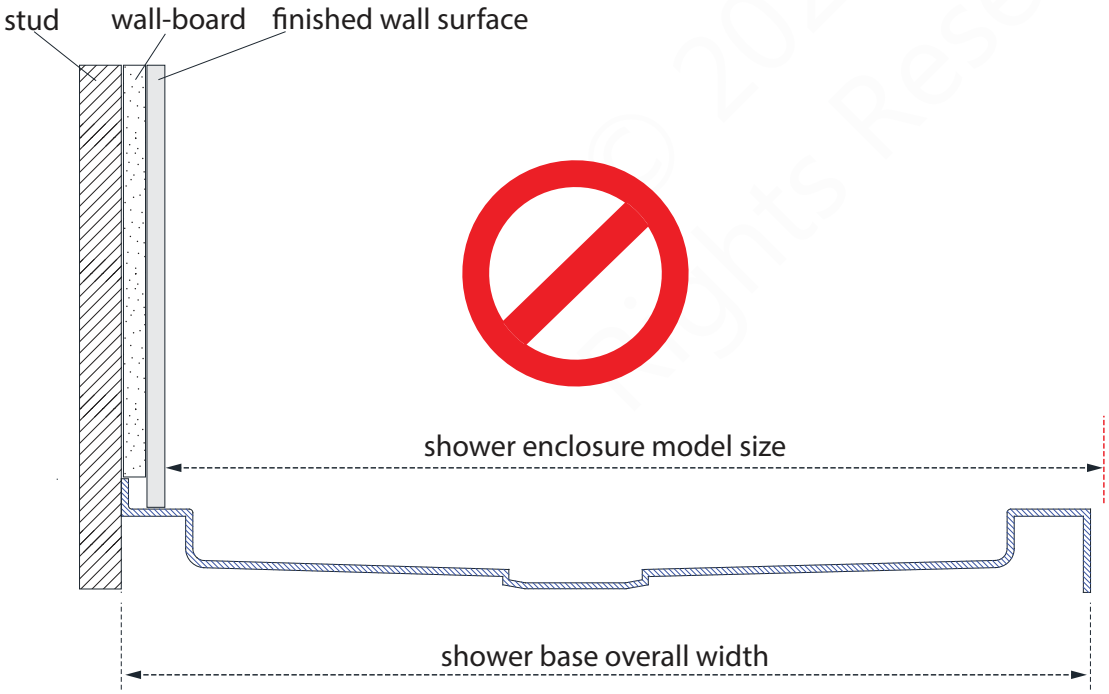

© 2026 All Rights Reserved

© 2026 All Rights Reserved

SINGLE THRESHOLD SHOWER BASE

Center Drain Configuration

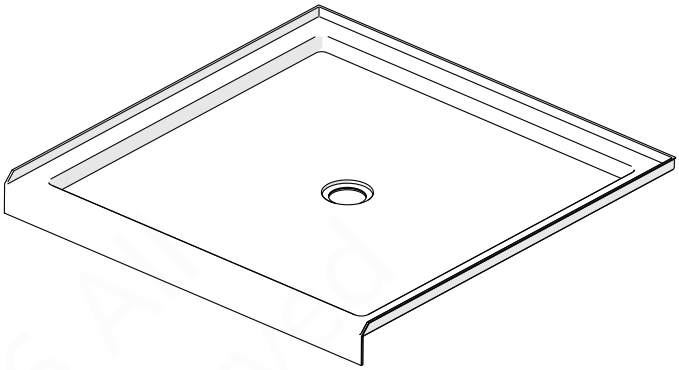

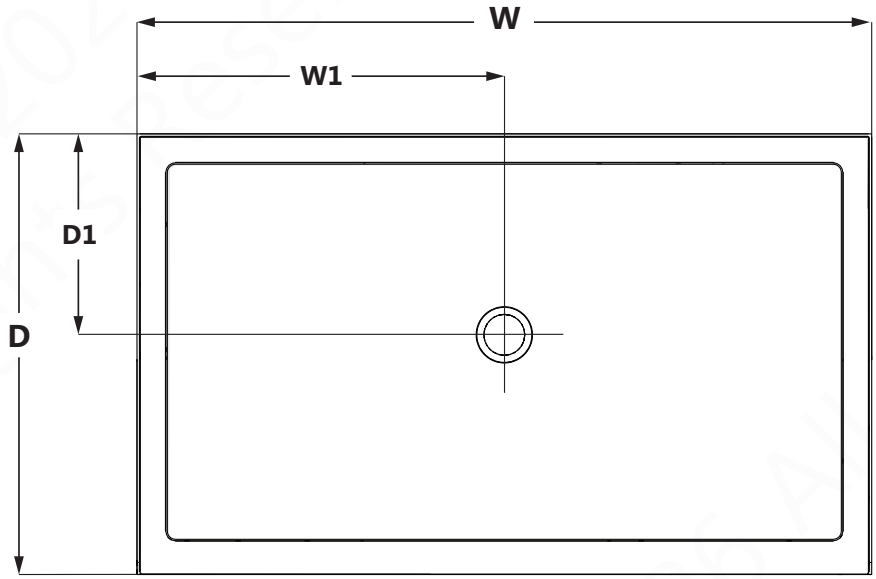

SPECIFICATION	D (in)	W (in)	D1 (in)	W1 (in)
32" x 32"	32"	32"	15"	16"
36" x 36"	36"	36"	15"	18"
32″ x 42″	32"	42"	15"	21"
34″ x 42″	34"	42"	15"	21"
36″ x 42″	36"	42"	15"	21"
42″ x 42″	42"	42"	20"	21"
32" x 48"	32"	48"	15"	24"
34″ x 48″	34"	48"	15"	24"
36" x 48"	36"	48"	15"	24"
32″ x 54″	32"	54"	15"	27"
34″ x 54″	34"	54"	15"	27"
36″ x 54″	36"	54"	15"	27"
30" x 60"	30"	60"	15"	30"
32" x 60"	32"	60"	15"	30"
34" x 60"	34"	60"	15"	30"
36" x 60"	36"	60"	15"	30"
42" x 36"	36"	42"	21"	18'
42" x 48"	42"	48"	21"	24"

SINGLE THRESHOLD SHOWER BASE

Left-Hand Drain Configuration

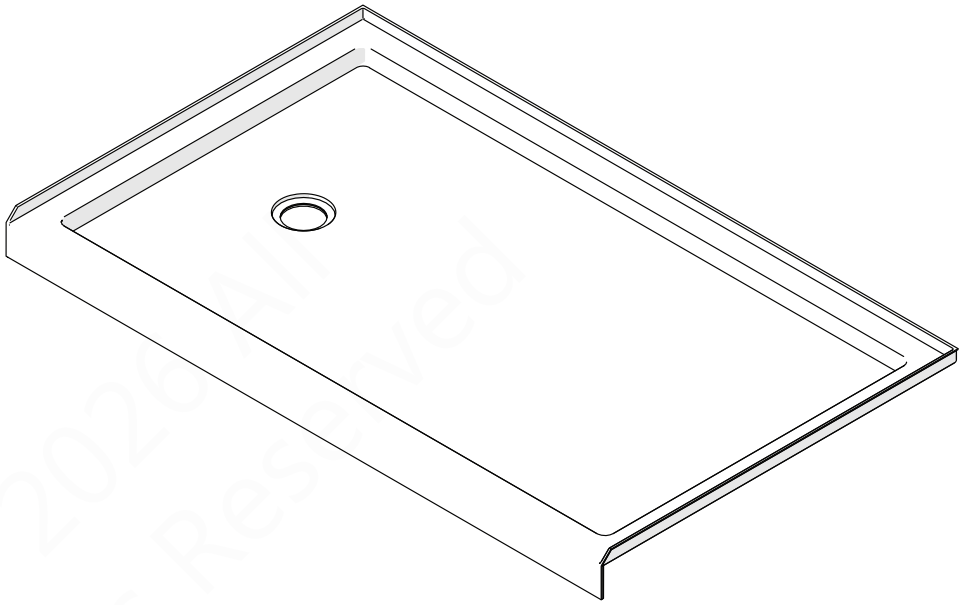

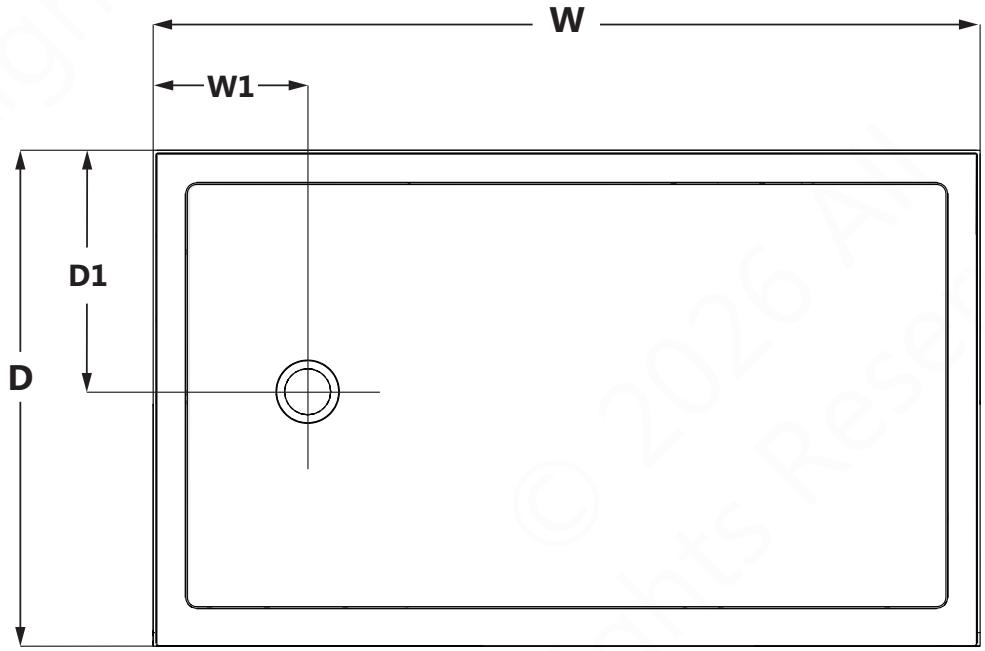

SPECIFICATION	D (in)	W (in)	D1 (in)	W1 (in)
30" x 60"	30"	60"	15"	12"
32" x 60"	32"	60"	15"	12"
34" x 60"	34"	60"	17"	12"
36" x 60"	36"	60"	18"	12"
42" x 60"	42"	60"	21"	12"

© 2026 All Rights Reserved

© 2026 All Rights Reserved

© 2026 All Rights Reserved

© 2026 All Rights Reserved

SINGLE THRESHOLD SHOWER BASE

Right-Hand Drain Configuration

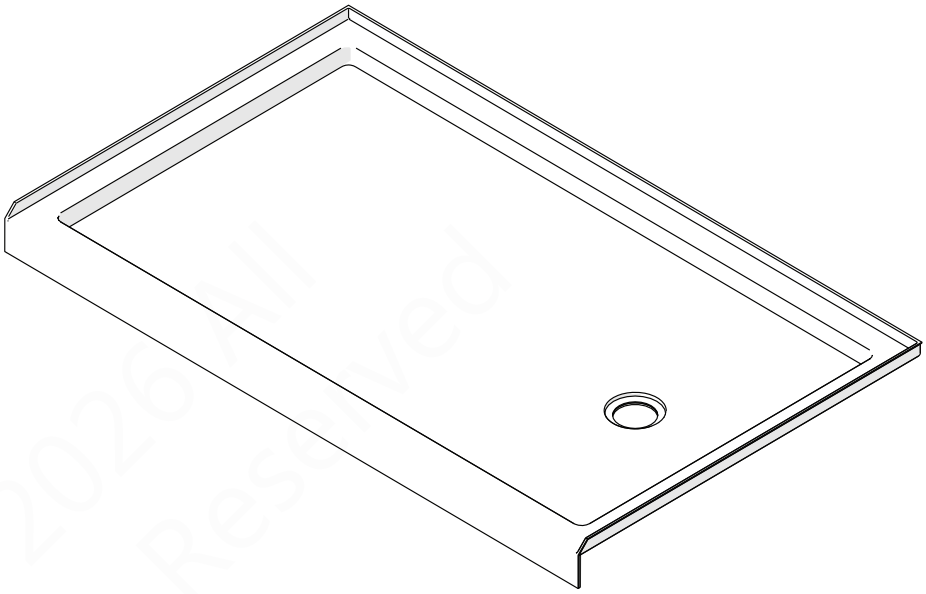

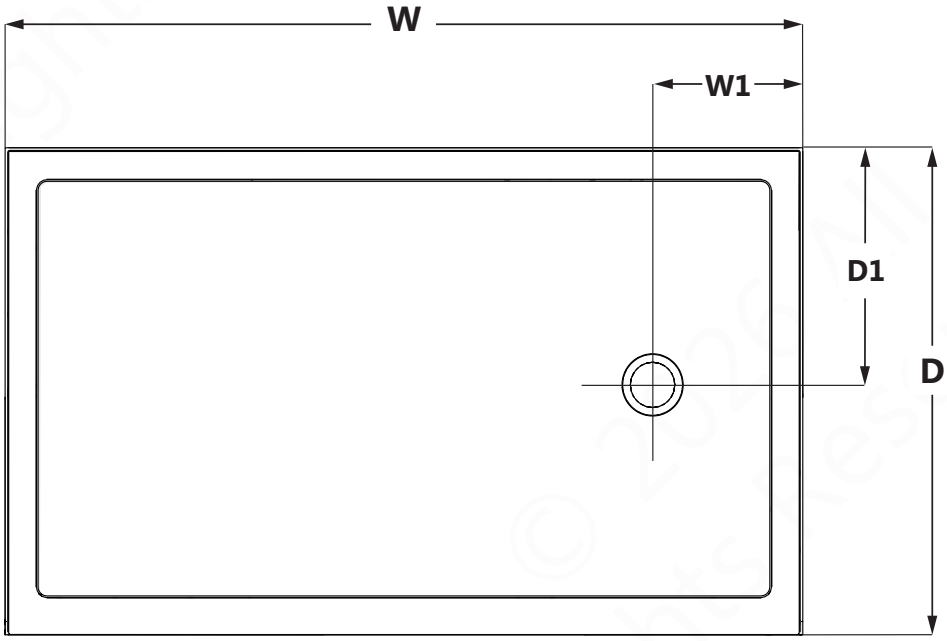

SPECIFICATION	D (in)	W (in)	D1 (in)	W1(in)
30"×60"	30"	60"	15"	12"
32"×60"	32"	60"	15"	12"
34"×60"	34"	60"	17"	12"
36"×60"	36"	60"	18"	12"
42"x60"	42"	60"	21"	12"

NEO ANGLE SHOWER BASE

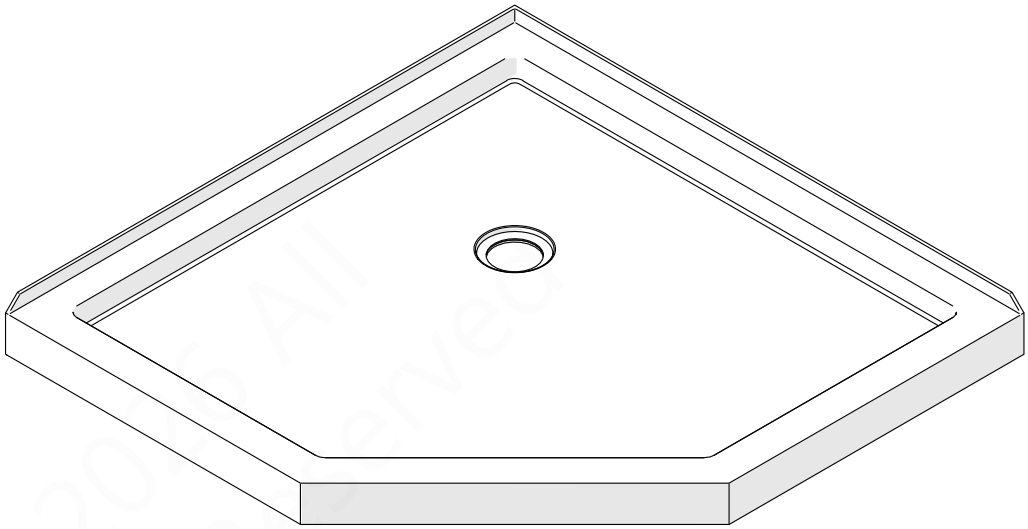

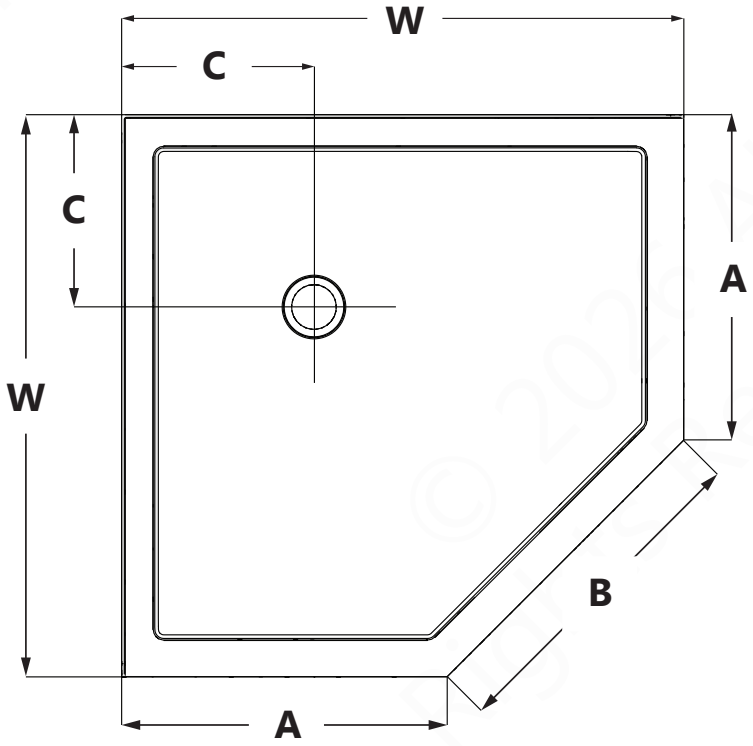

SPECIFICATION	W (in)	A (in)	B (in)	C (in)
36" x 36"	36"	18 5/16"	25"	12"
38" x 38"	38"	20 5/16"	25"	12"
40" x 40"	40"	22 5/16"	25"	14 3/8"
42" x 42"	42"	24 5/16"	25"	14 3/8"

© 2026 All Rights Reserved

© 2026 All Rights Reserved

QUARTER ROUND SHOWER BASE

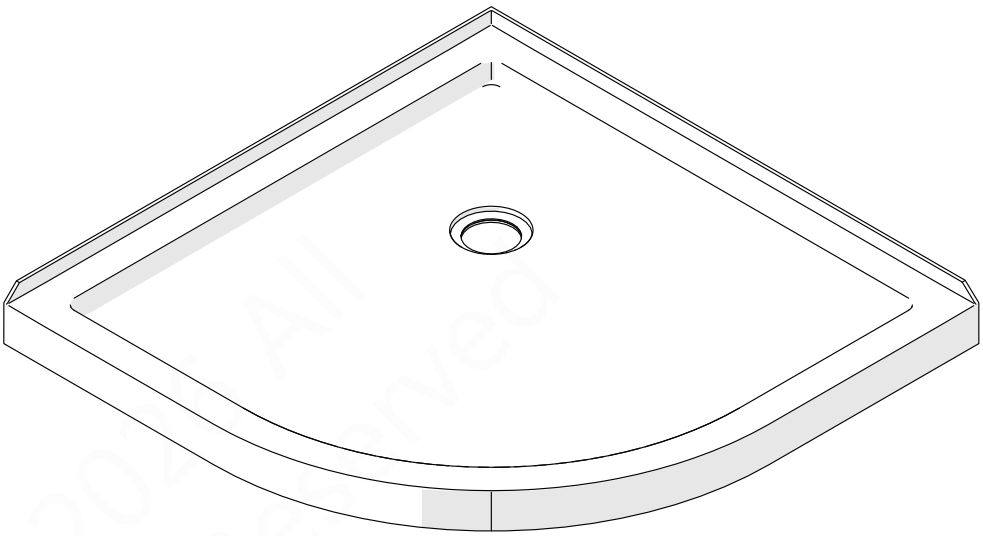

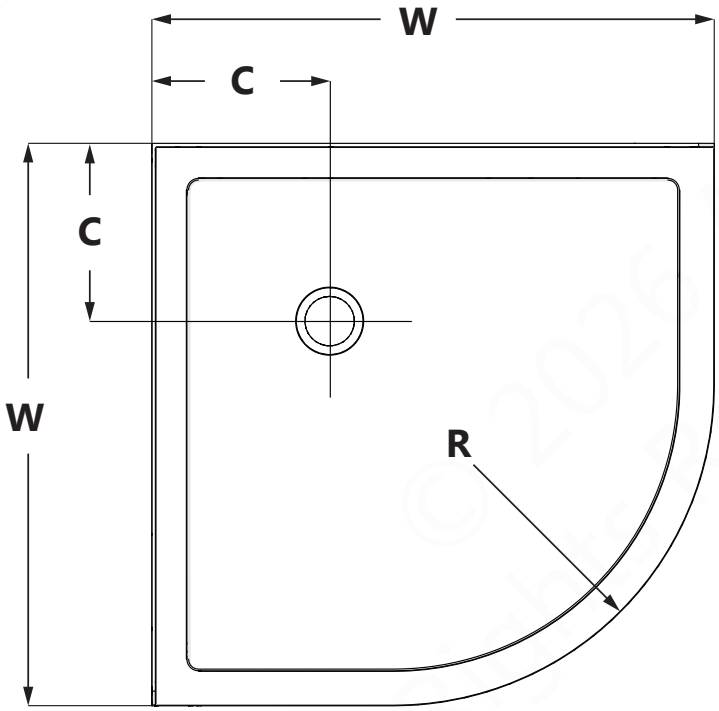

SPECIFICATION	W (in)	C (in)	R (in)
33" x 33"	33"	12"	21 5/8"
36" x 36"	36"	12"	21 5/8"
38" x 38"	38"	12"	21 5/8"

DOUBLE THRESHOLD SHOWER BASE

Corner Drain Configuration

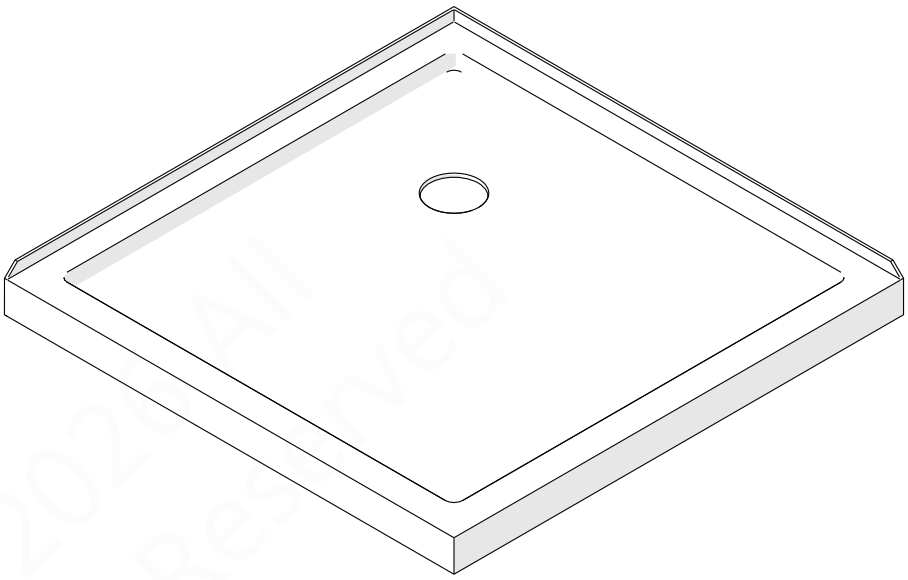

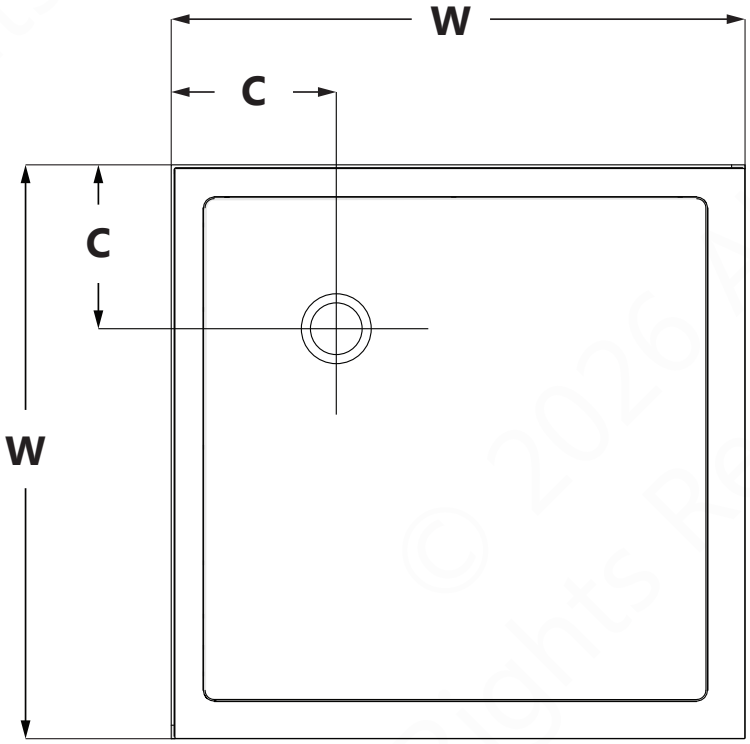

SPECIFICATION	W (in)	C (in)
32" x 32"	32"	12"
36" x 36"	36"	12"
42" x 42"	42"	12"

© 2026 All Rights Reserved

© 2026 All Rights Reserved

© 2026 All Rights Reserved

© 2026 All Rights Reserved

DOUBLE THRESHOLD SHOWER BASE

Left-Hand Drain Configuration

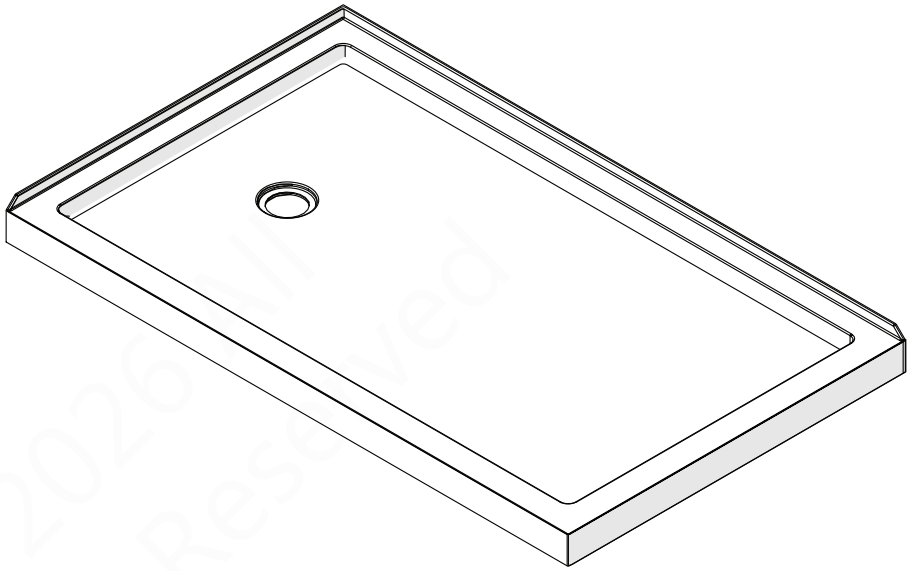

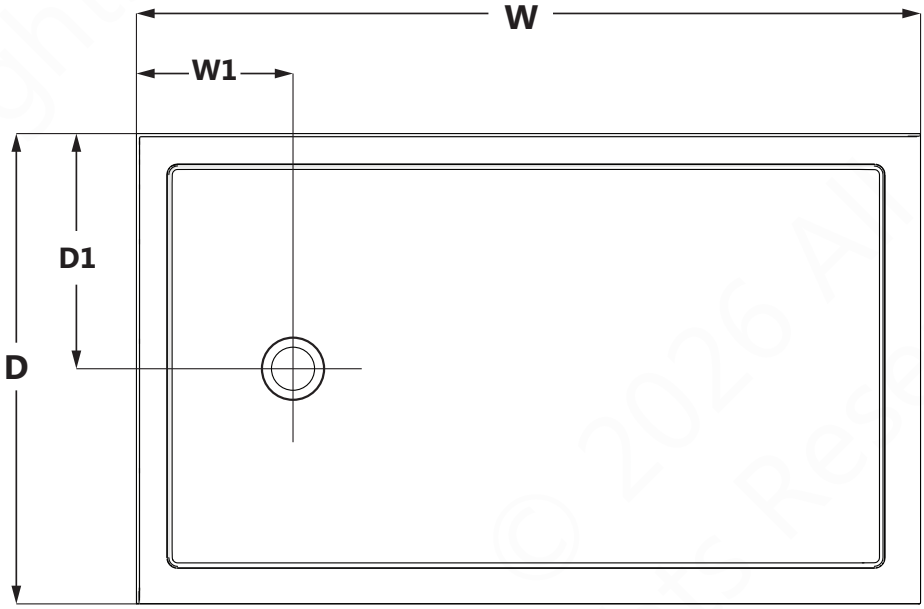

SPECIFICATION	D (in)	W (in)	D1 (in)	W1(in)
32" x 60"	32"	60"	16"	12"
36" x 60"	36"	60"	18"	12"
36" x 54"	36"	54"	18"	12"
32" x 48"	32"	48"	16"	12"
34" x 48"	34"	48"	17"	12"
36" x 48"	36"	48"	18"	12"

© 2026 All Rights Reserved

DOUBLE THRESHOLD SHOWER BASE

Right-Hand Drain Configuration

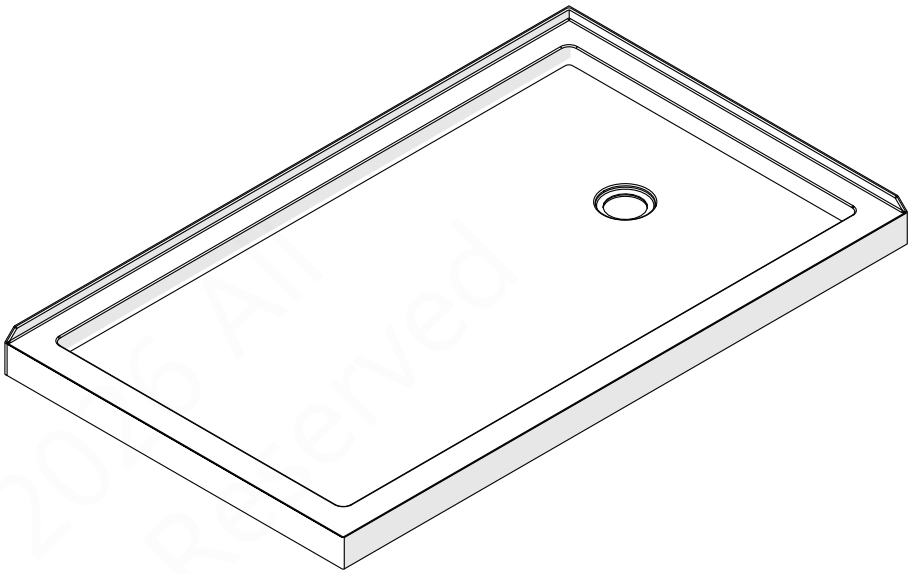

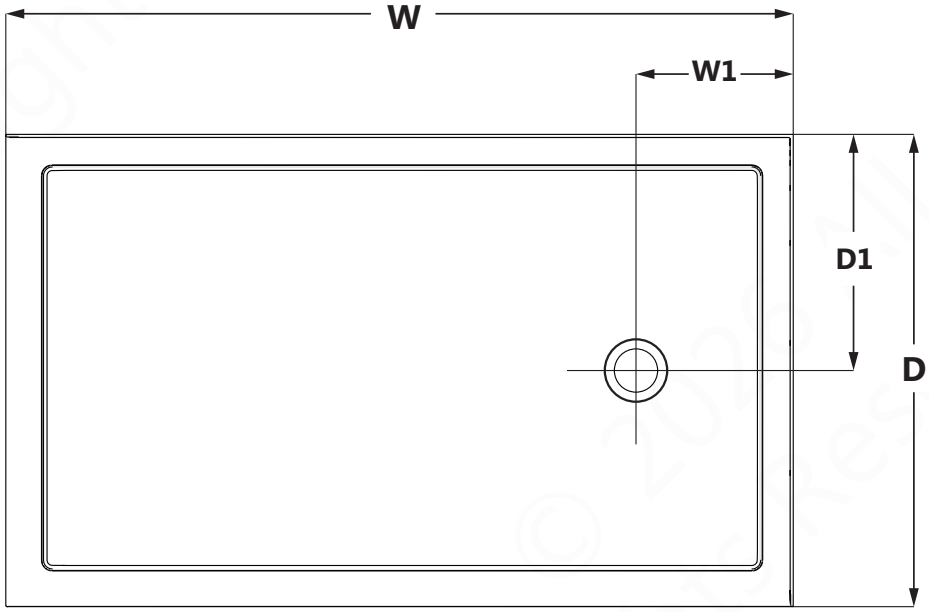

SPECIFICATION	D (in)	W (in)	D1 (in)	W1(in)
32" x 60"	32"	60"	16"	12"
36" x 60"	36"	60"	18"	12"
36" x 54"	36"	54"	18"	12"
32" x 48"	32"	48"	16"	12"
34" x 48"	34"	48"	17"	12"
36" x 48"	36"	48"	18"	12"

© 2026 All Rights Reserved

© 2026 All Rights Reserved

Shower Base Cross Section Diagram

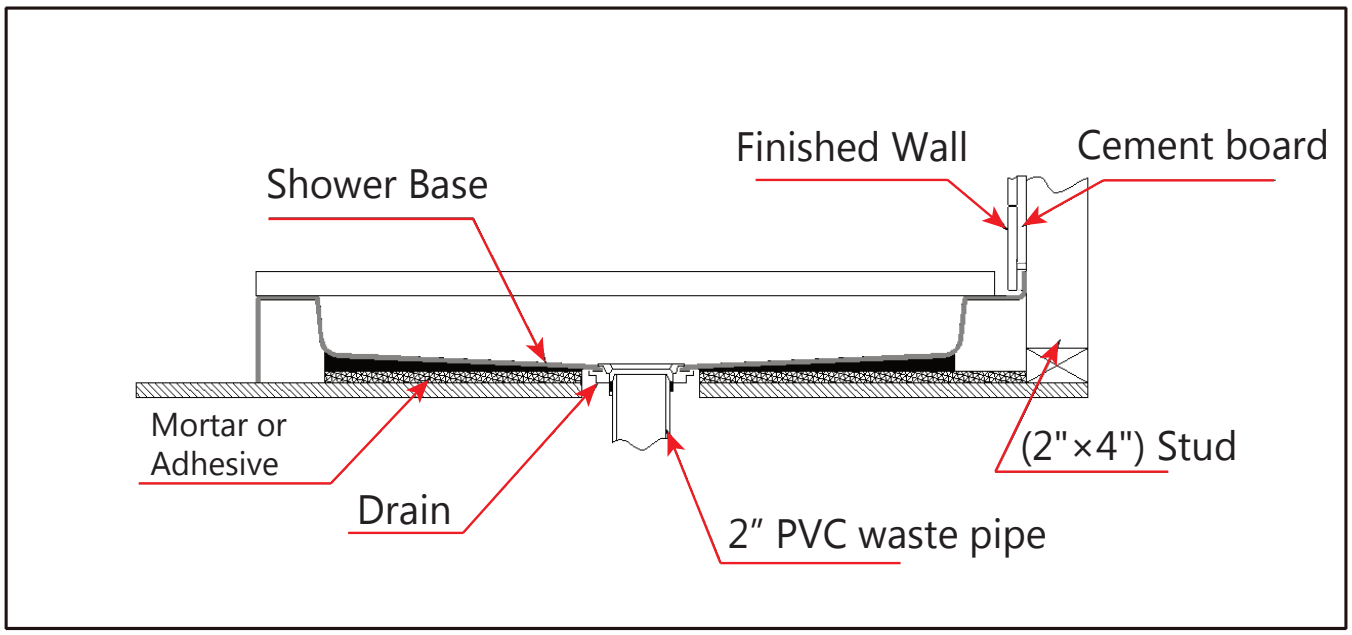

This product should be installed by someone familiar with the construction requirements for this type of project and the care necessary for the safe installation and operation of the product.

1

Corner Installation

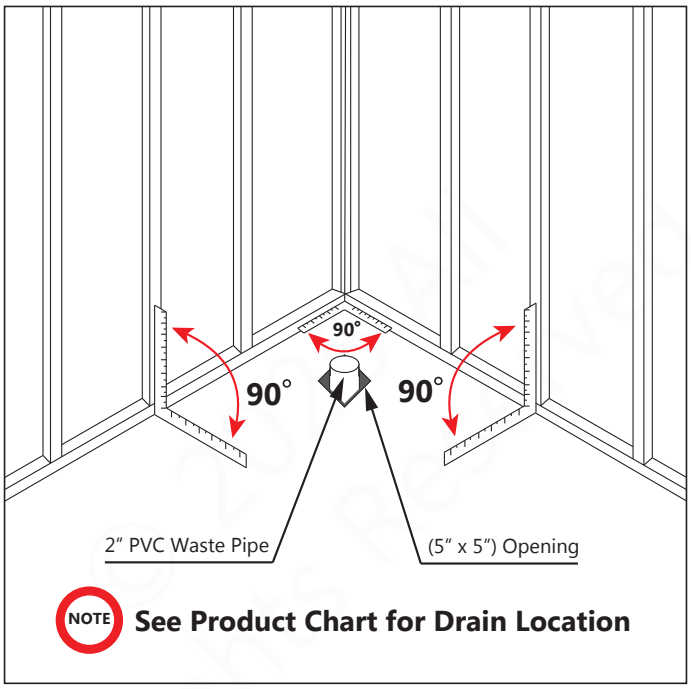

Fig 1a

- Ensure that the floor and the studs are at right angles.
- Provide a 5" x 5" opening in the sub-floor for the drain.
- The 2" PVC waste pipe should extend above the surface of the sub-floor according to the drain installation instructions and the height of the shower base.
- Refer to the product drawings and tables in this installation manual for the drain location **(Fig 1a & Fig 1b)**

Sub-floor <u>must</u> be leveled before beginning the shower base installation!

Alcove Installation

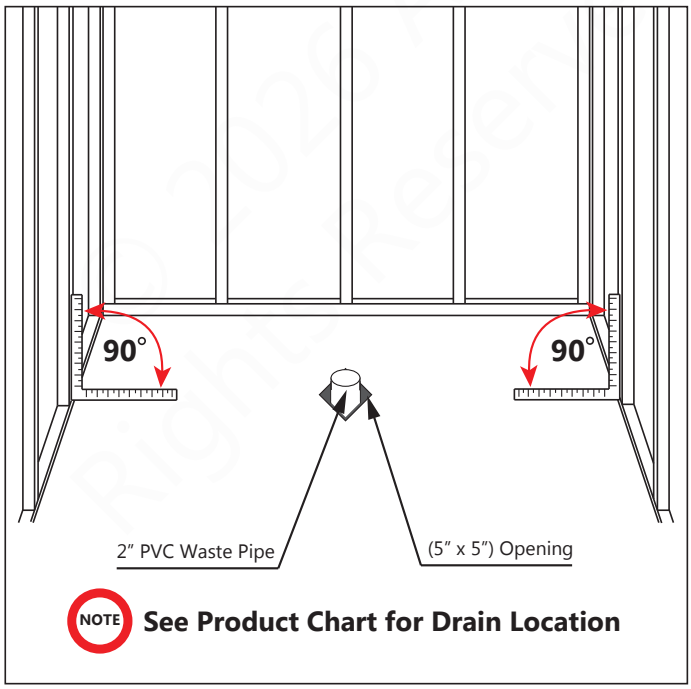

Fig 1b

© 2026 All Rights Reserved

© 2026 All Rights Reserved

2

NOTE This shower base is designed to accept a standard 2" shower drain.

Please carefully read and follow all the installation instructions and requirements that come with the drain assembly you use for this shower base installation.

Install the shower drain according to the drain installation manual (supplied with the drain), then place the shower base into the designated position so that it butts up against the studs and the drain cutout drops around the drain pipe

If your shower drain requires plumbers putty for installation, you **must** use an acrylic-safe plumbers putty on this shower base to prevent damage and/or staining of the shower base. Please read the plumbers putty specifications carefully before applying plumbers putty to the shower base.

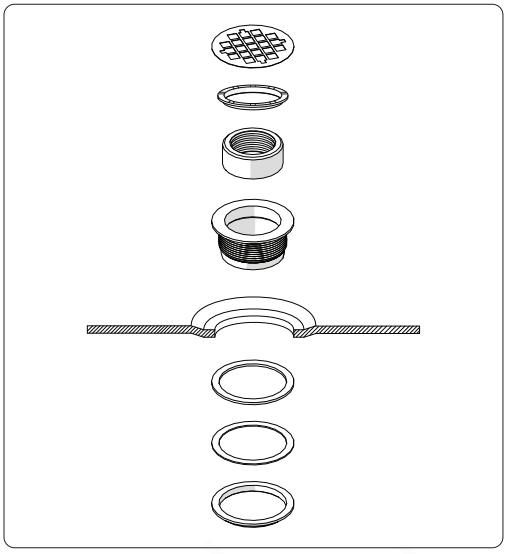

Fig 2a

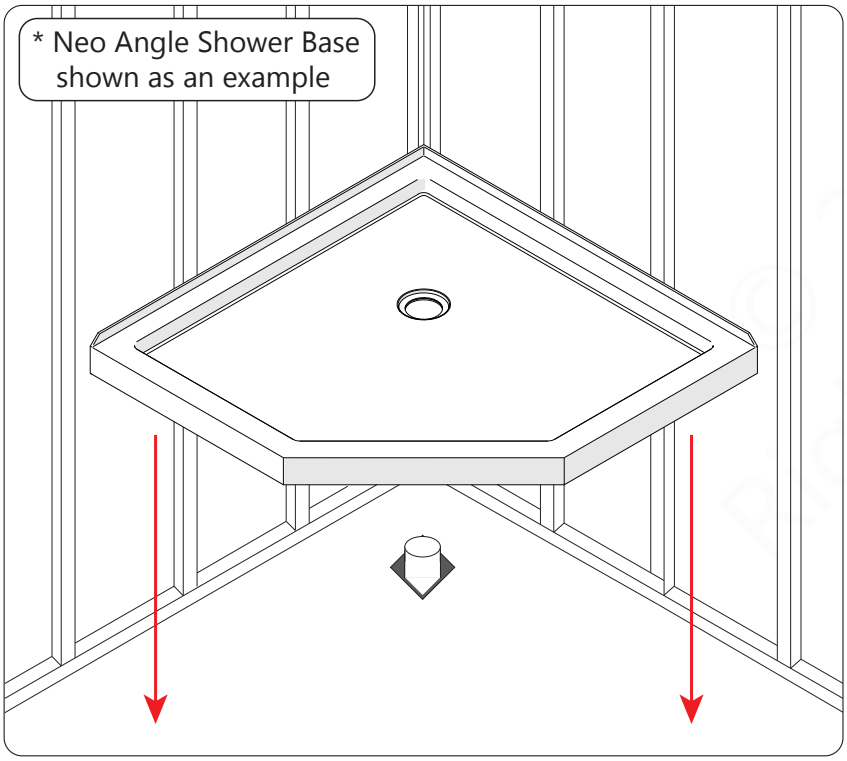

Fig 2b

Lower the base over the drain pipe and set it into place against the studs.

3

Level the base in two directions (left-to-right, and front-to-back). Once the base is perfectly level, place marks on the studs above the upper edge of the tile flanges.

NOTE: For proper drainage, the shower base **must** be installed level on **all** sides.

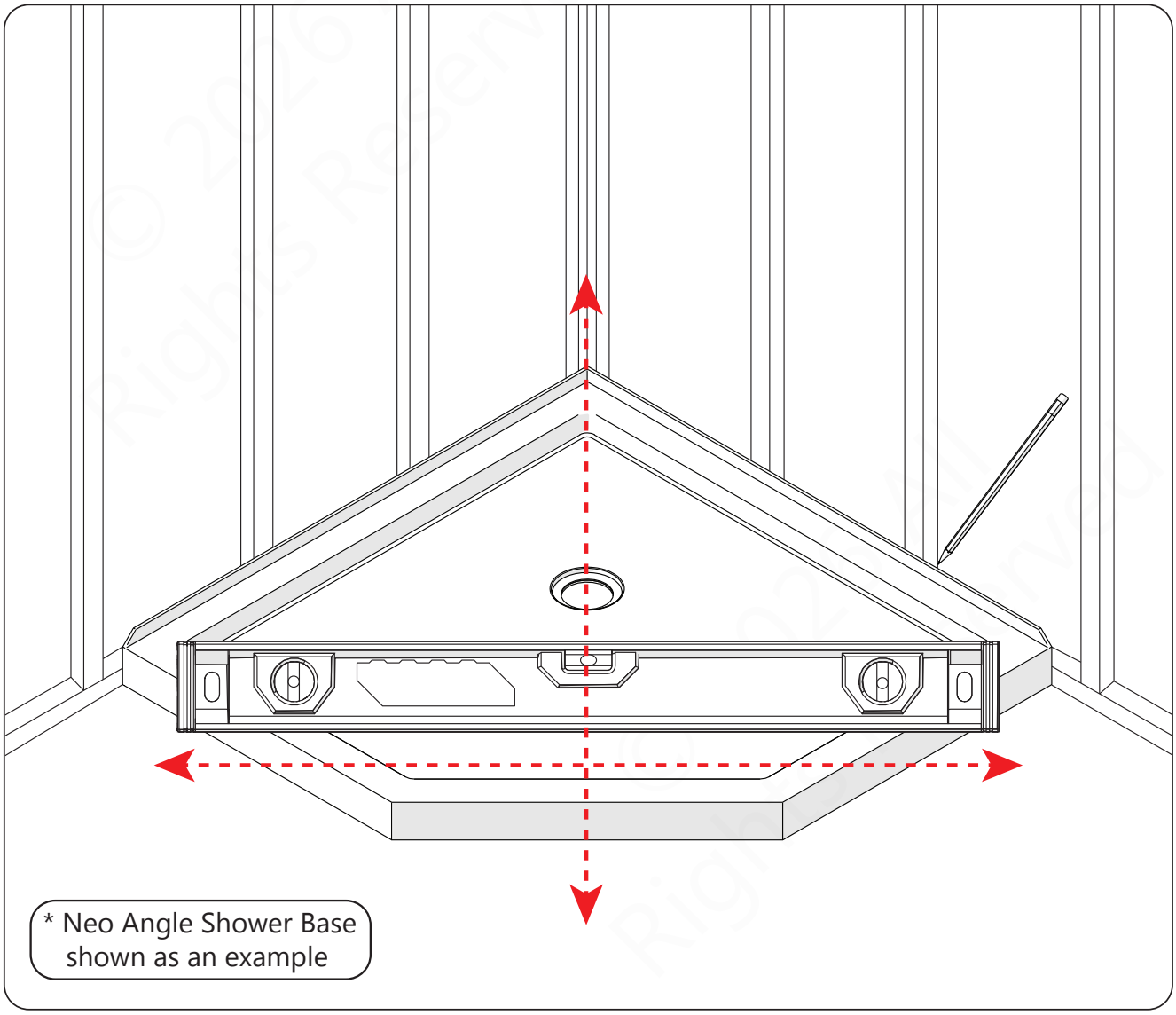

Fig 3

© 2026 All Rights Reserved

© 2026 All Rights Reserved

4.1

INSTALLATION OPTION # 1

INSTALL SHOWER BASE IN A BED OF MORTAR

(Recommended Installation Method)

NOTE

A sand-mix, topping/bedding mortar type is recommended for installation of this shower base. **Do Not** use concrete or plaster.

Carefully read the mixing directions on the bag of mortar. Mix the bedding material accordingly, then spread it onto the sub-floor. Apply enough bedding material to support the entire bottom of the shower base. This will provide additional stability and prevent the base from shifting position.

(Fig 4.1a)

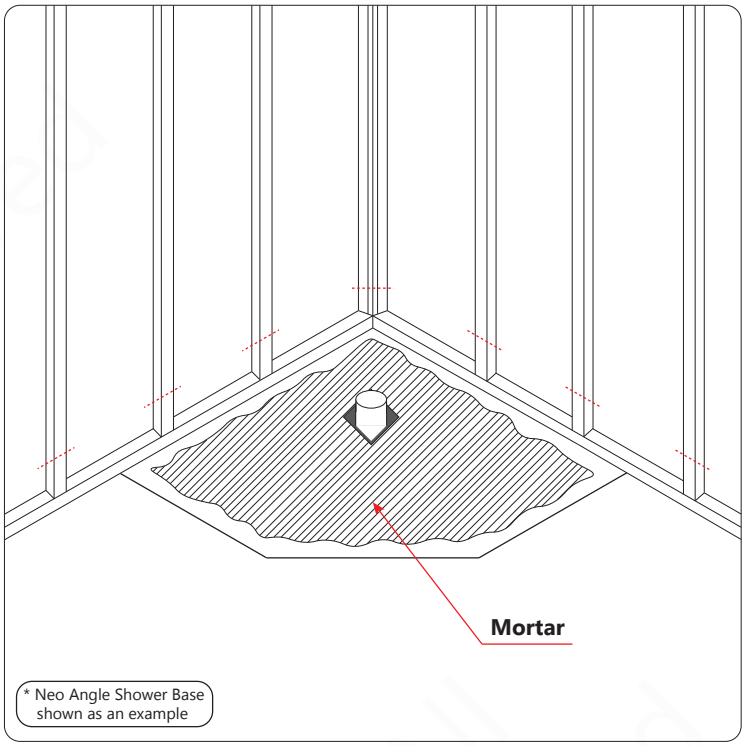

Fig 4.1a

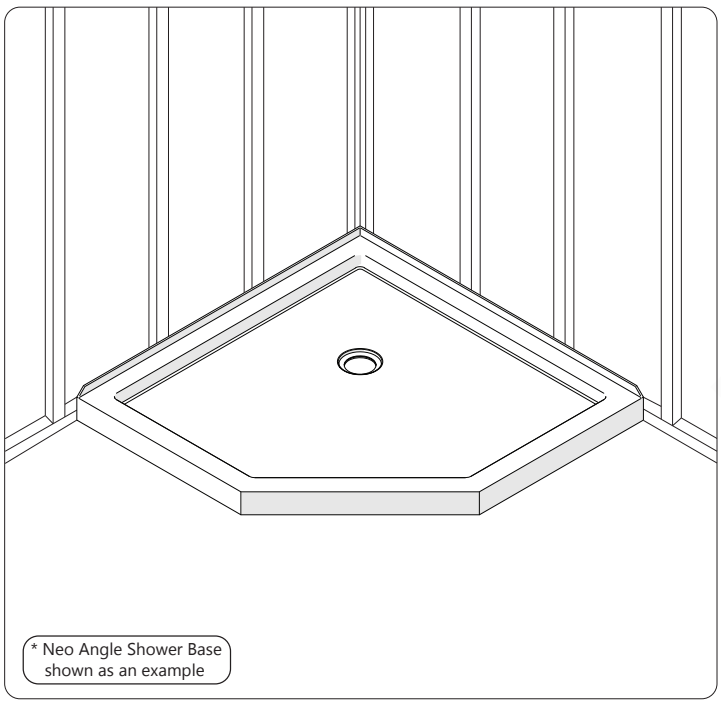

Fig 4.1b

After the bedding material has been poured and before it sets, place the shower base into position with the drain assembly sliding over the PVC waste pipe. It will be necessary to push the shower base down until the top edges of the tile flanges align with the marks drawn on the studs and the front edge is contacting the sub-floor along the entire length of the shower base. Ensure that the base is level in all directions. You may need to use shims to hold the base level until the bedding material fully sets and hardens. Remove all excess mortar.

(Fig 4.1b)

4.2 INSTALLATION OPTION # 2

INSTALL SHOWER BASE WITH SCREWS AND (OPTIONAL) ADHESIVE

The shower base must be installed on a level sub-floor. If installation option # 2 is selected and the sub-floor is not level, self-leveling compound can be used to level the sub-floor prior to installation.

IMPORTANT! Be sure to follow **all** recommendations and guidelines provided by the manufacturer of the self-leveling compound to ensure best results and **always** check the sub-floor for level after the product has cured to confirm the floor meets the shower base installation requirement for a level sub-floor. **DO NOT** proceed with shower base installation until it is confirmed that the sub-floor is level.

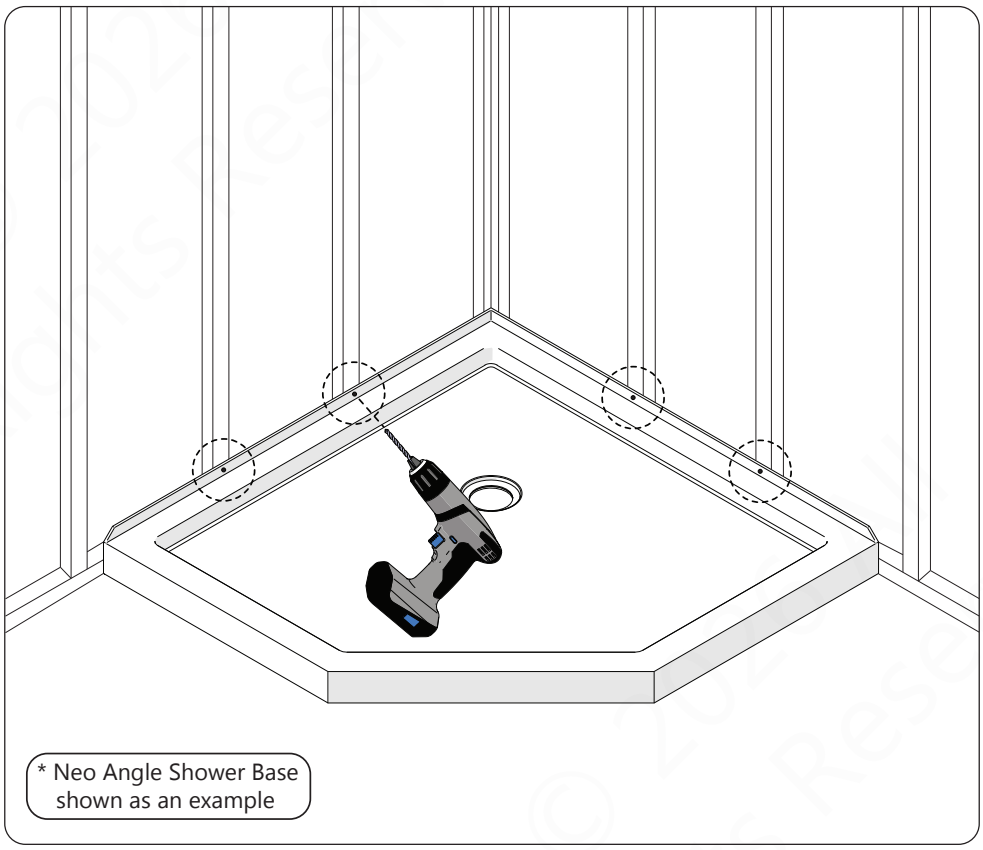

Fig 4.2a

Once it is confirmed that the shower base is level, fit the base into the opening and butt the tile flanges directly up to the studs so that the base is now positioned in its final installation location. Using a 3/16" drill bit, carefully drill holes in the tiling flanges making sure that the hole locations will align with the centers of the studs. Remove the shower base from the opening once all of the holes are drilled.

© 2026 All Rights Reserved

© 2026 All Rights Reserved

4.2 (CONTINUED)

OPTIONAL INSTALLATION STEP

NOTE

Using acrylic-safe adhesive to adhere the base to the sub-floor is recommended, however, it is not required. Using acrylic-safe adhesive to secure the base to the sub-floor will reduce the risk of the shower base shifting if the sub-floor "settles" or flexes over time.

The adhesive used for this step must be an acrylic-safe adhesive. Please carefully read the packaging of the adhesive to be sure it specifies it is safe for use on acrylic and ABS plastic

Apply several tubes of acrylic-safe construction adhesive to the sub-floor making sure to thoroughly cover the area where the base will be installed. **(Fig 4.2b)**

NOTE: The total number of adhesive tubes will depend on the size of the shower base you are installing. Please read the coverage guidelines on the adhesive packaging to help determine how much adhesive you will need to purchase for your installation.

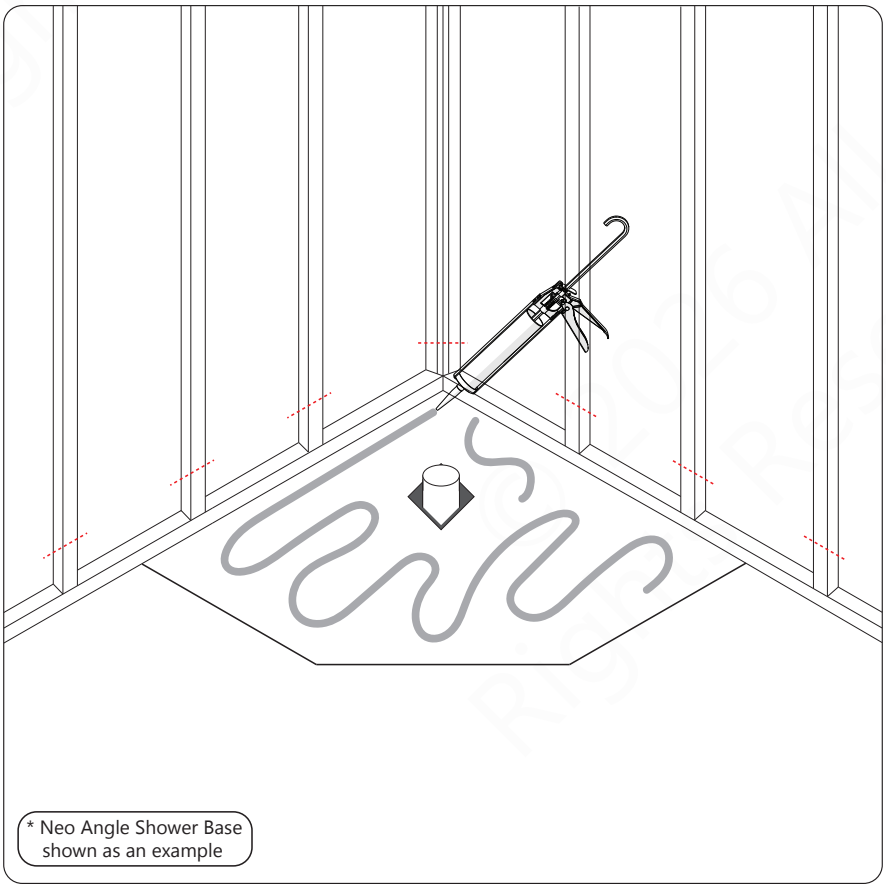

Fig 4.2b

TIP Use a "U" or square notched trowel to spread the adhesive evenly.

4.2 (CONTINUED)

If adhesive was used, install the shower base back into the opening and firmly press it down into the adhesive making sure the tile flanges are butted up to the studs and making sure the shower base is level on all sides.

IMPORTANT! Make sure the shower base remains level the entire time as you perform the next step.

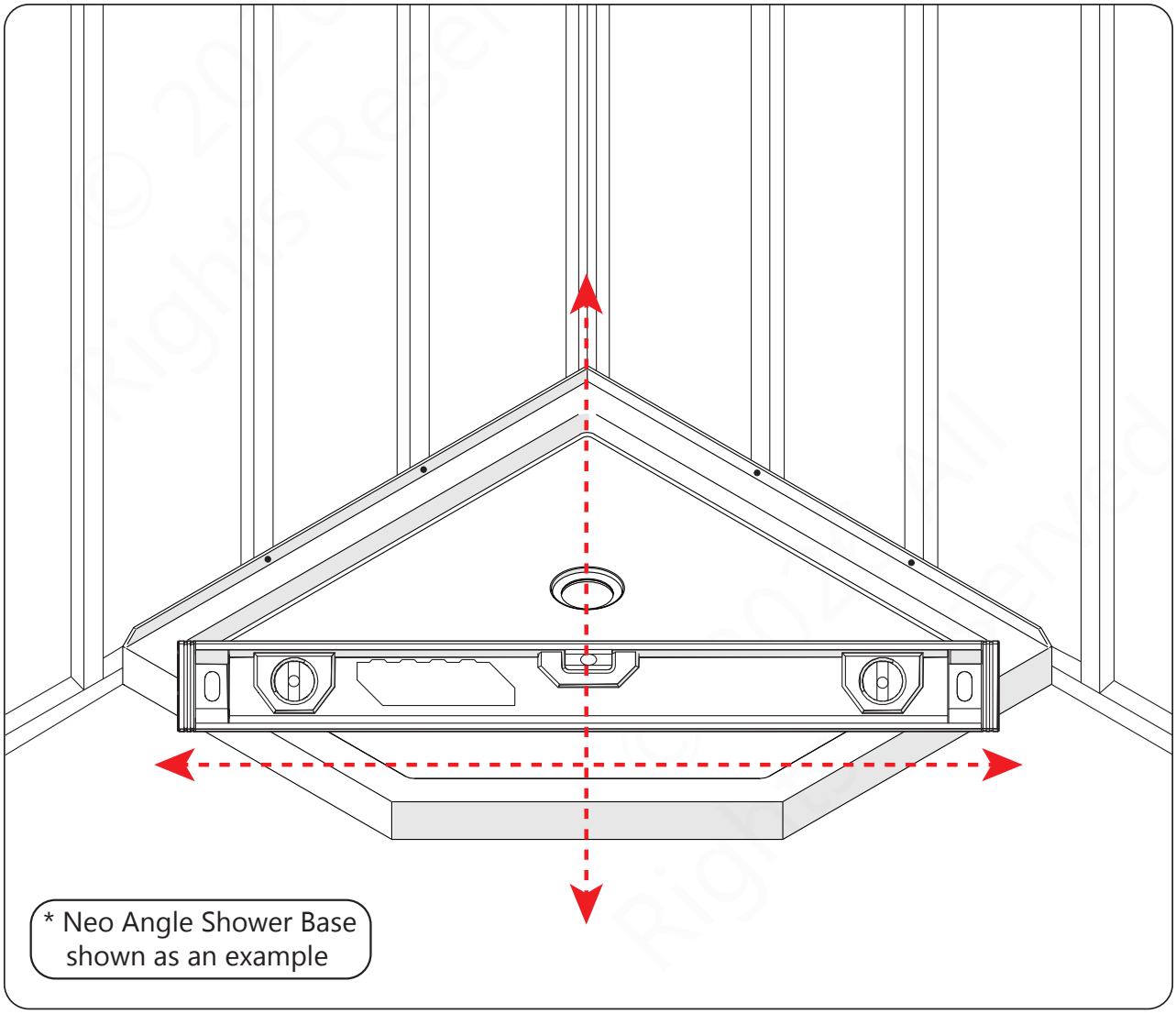

Fig 4.2c

© 2026 All Rights Reserved

© 2026 All Rights Reserved

4.2 (CONTINUED)

There may be some parts of the tile flanges where there is a slight rim that creates some dead space between the stud and the base. Use small wooden shims between the flanges and the stud in any area where this small void is apparent. Make sure the wooden shim is placed below the rim of the tile flange and that the shim only fills the dead space (see **Side View - Fig 4.2d**).

Carefully fasten the tile flanges to the studs with the 1-1/4" Stainless Steel Corrosion-Resistant Truss Head #8 Screws. To avoid the risk of cracking the shower base, **Do Not** over-tighten the screws.

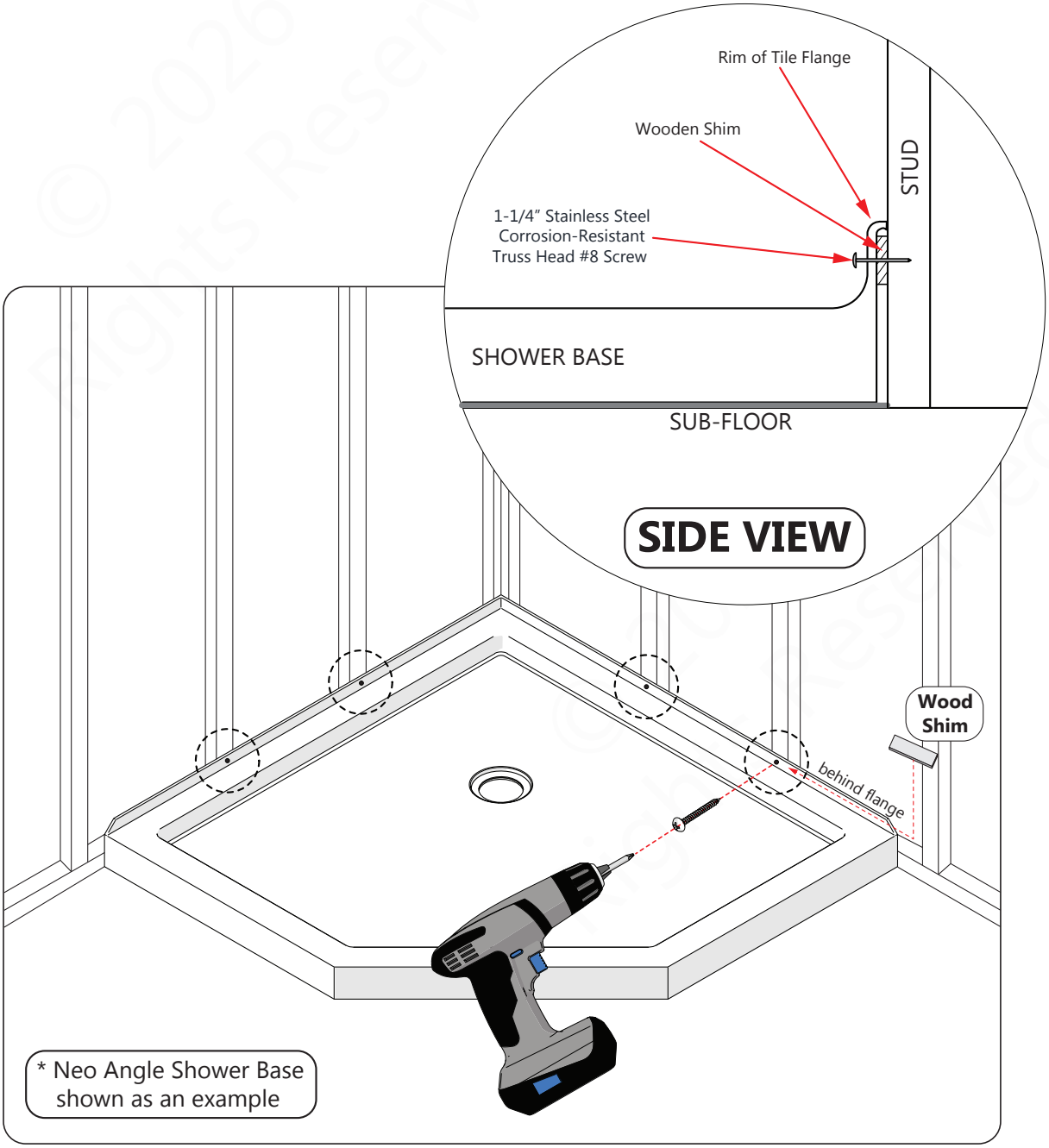

Fig 4.2d

5

NOTE If you used installation option # 1, allow the mortar to completely cure and harden before applying weight to the bottom of the shower base.

Install the cement board (or wallboard) above the tile flanges and secure it to the studs

Put the tiles (or other finishing wall material) over the cement board leaving a 1/8" gap between the bottom of the tile (or wall kit) and the shower base. Use 100% silicone caulk to fill the gap.

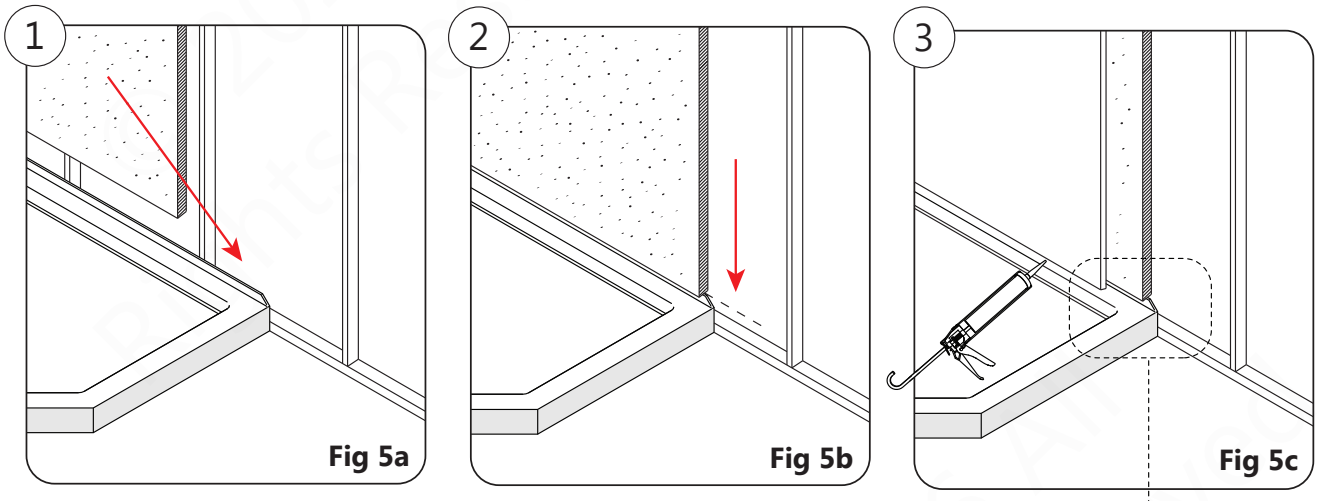

Fig 5a Fig 5b Fig 5c

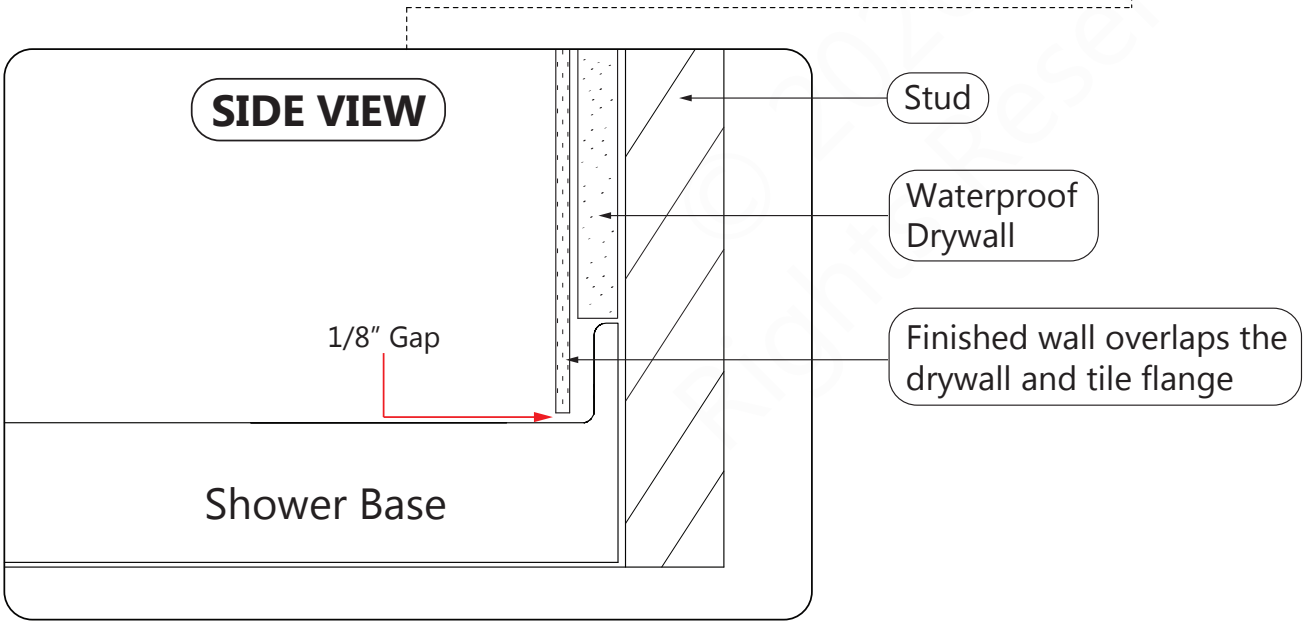

© 2026 All Rights Reserved

© 2026 All Rights Reserved

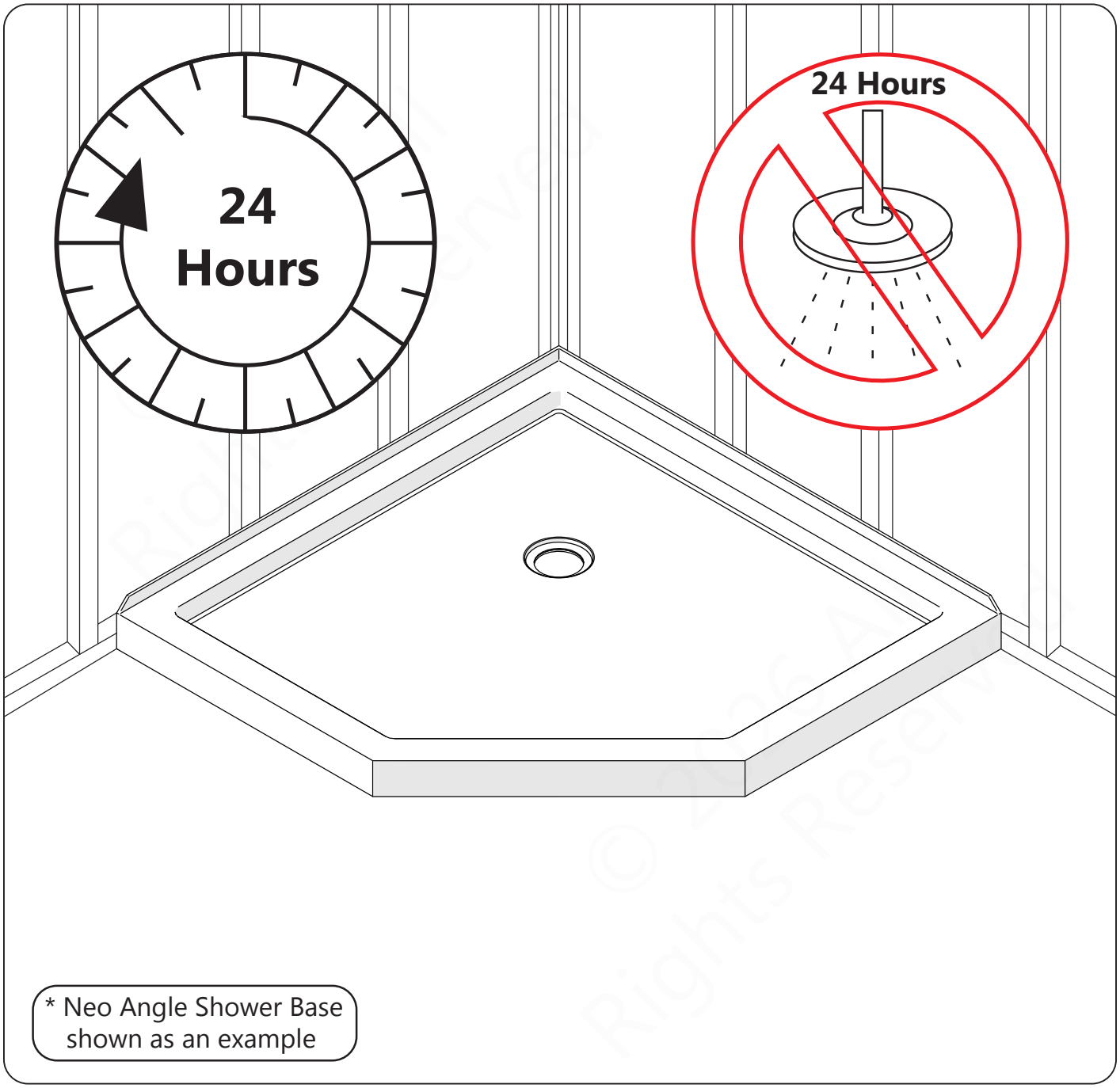

Product Maintenance

ACRYLIC BASES and BACK WALLS: To ensure long-lasting life for your acrylic base and/or back walls, wipe them off after each use with a soft cloth. To clean the acrylic base and/or back walls, use only non-abrasive sprays or cream-based cleaners. Avoid the use of aerosol spray cleaners. Never use abrasive cleansers, metal brushes, or scrapers that could scratch, damage, or dull the surface.

NOTE

IMPORTANT!

The product owner should keep this installation manual for their records so they have it for future reference.

If you are a contractor installing this unit for a customer, it is recommended that you complete the section below, cut it out of the manual with scissors, then leave the rest of the manual with your client.

Contact the manufacturer directly for more information on warranty, troubleshooting, replacement parts, customer support, etc.

Record the following purchase information for your records or in the event you need to contact the manufacturer:

Purchase Order Number _____

Installation Date _____

Installed By _____

Store/Vendor Purchased From _____

OD Number (optional) _____

*found on the shipping box or label if available

SKU Number _____

© 2026 All Rights Reserved

© 2026 All Rights Reserved

Low Profile Acrylic Shower Base

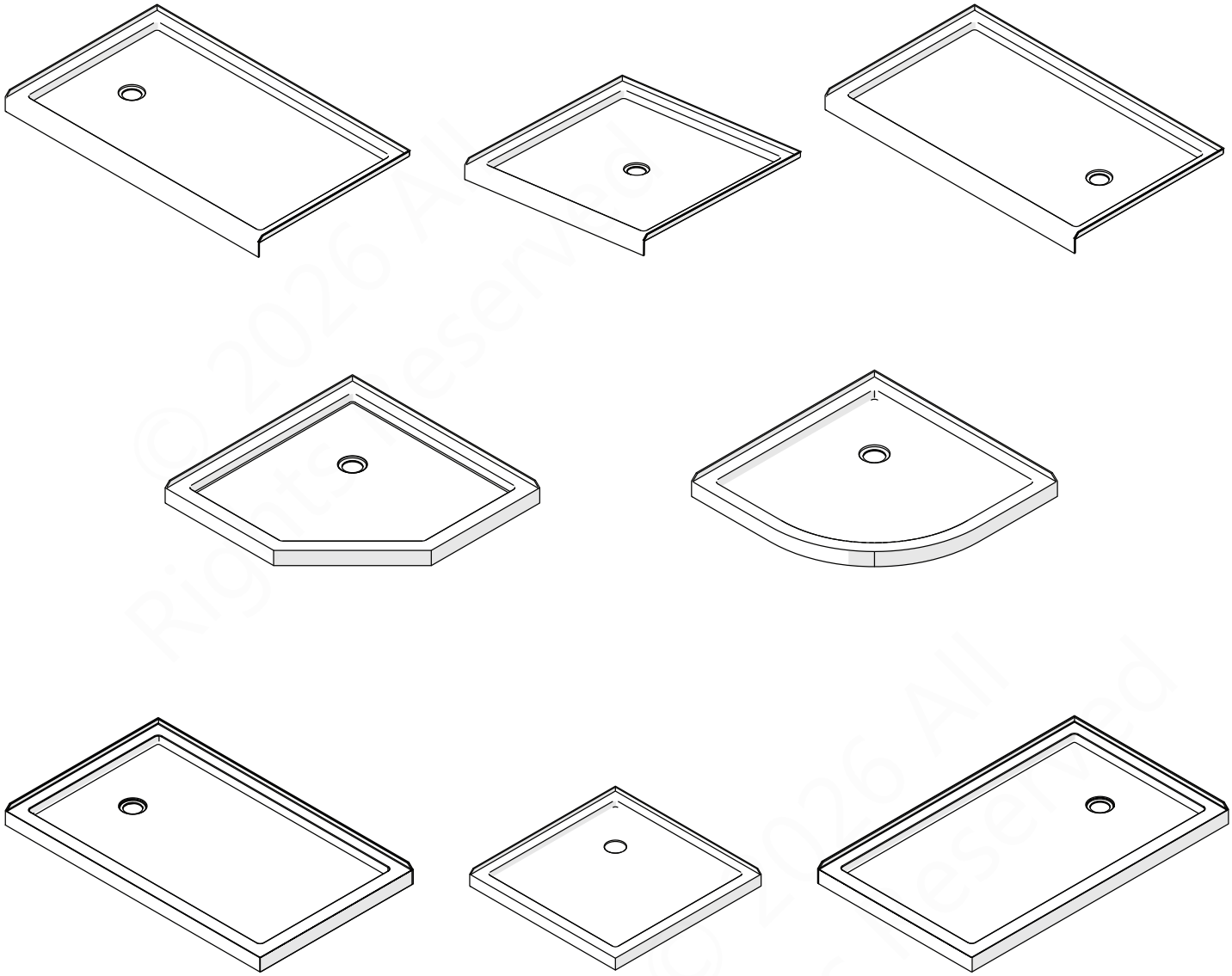

TIP

Prior to contacting the manufacturer, please have the following information readily available:

- Purchase Order information
  - Name, PO Number, Dealer/Vendor Name, etc.
- SKU/Model Number
- Factory Part Information

IMPORTANT!
The manufacturer reserves the right to alter, modify, or redesign products at any time without prior notice for the purpose of product improvement and customer experience.