

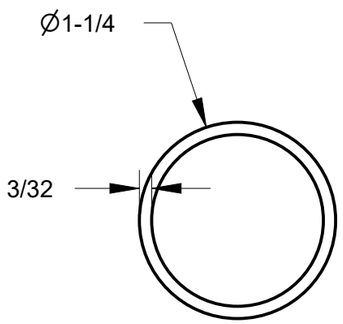

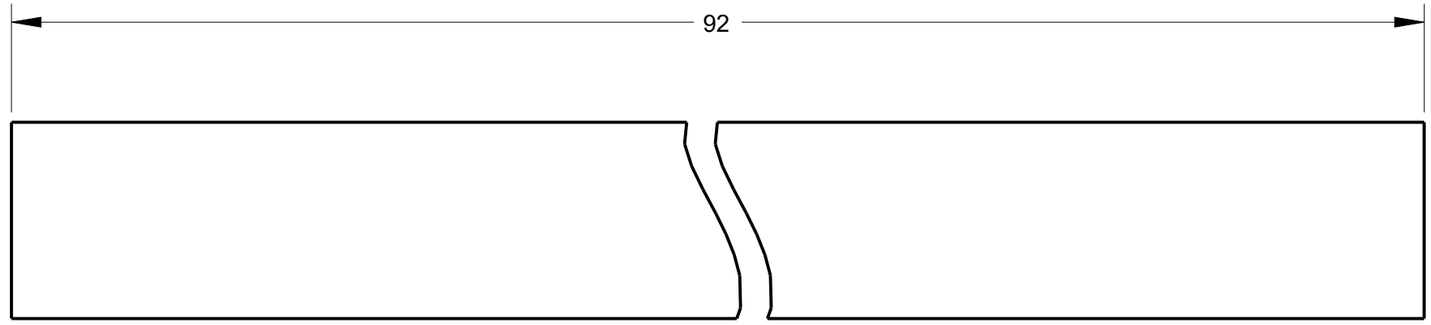

HR ITEM NUMBER	PRODUCT DESCRIPTION	FINISH
151692CH-6	CLOSET ROD, ROUND, 1-5/16in, 92in	CHROME
151692SN-6	CLOSET ROD, ROUND, 1-5/16in, 92in	SATIN NICKEL
151692MB-6	CLOSET ROD, ROUND, 1-5/16in, 92in	MATTE BLACK
151692GLD-6	CLOSET ROD, ROUND, 1-5/16in, 92in	GOLD

Hardware™ Resources

HARDWARE RESOURCES RESERVES THE RIGHT TO CHANGE SPECIFICATIONS WITHOUT NOTICE. IN CASE OF A DISCREPENCY, ACTUAL PART GEOMETRY SUPERSEDES THIS DOCUMENT.

THE INFORMATION CONTAINED WITHIN THIS DRAWING IS THE SOLE PROPERTY OF HARDWARE RESOURCES INC. ANY REPRODUCTION IN PART OR WHOLE WITHOUT WRITTEN PERMISSION OF HARDWARE RESOURCES INC. IS PROHIBITED.

DOCUMENT STATUS **Released**

UNLESS OTHERWISE SPECIFIED DIMENSIONS ARE IN INCHES (IN)

MATERIAL	FINISH
STEEL	SEE TABLE

THIRD ANGLE PROJECTION

DATE 11MAR2024

DESCRIPTION: CLOSET ROD, ROUND, 92in

DRAWING NUMBER	REV
151692	**B**

SIZE	SCALE	SHEET
A3	1.000	1 / 1