FLASHWorkplace

196861145919
196861145926

# Single Seat Reception Chair

**Customer Service Email: CustomerExperience@theubiquegroup.com | Phone: 866-552-2810**

## PARTS

| | | | | | |
|---|---|---|---|---|---|
| (1)X2 SIDE FRAMES | (2)X1 SEAT FRAME | (3)X1 SEAT CUSHION | (4)X1 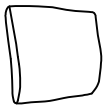 BACK CUSHION | (5)X6 5/16"*1-1/4" | (6)X4 5/16"*1-1/2" |
| (7)X10 ϕ22* ϕ10*2MMT | (8)X2 1/4"*2-1/4" | (9)X2 1/4"*1-3/4" | (10)X1 ALLEN WRENCH, 5mm | | |

## STEP 1

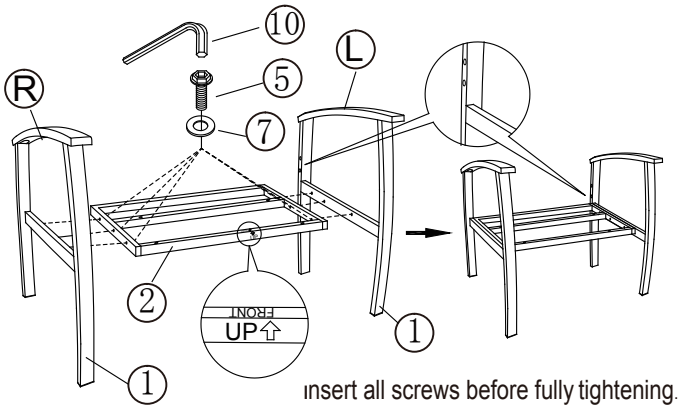


Insert all screws before fully tightening.

## STEP 2

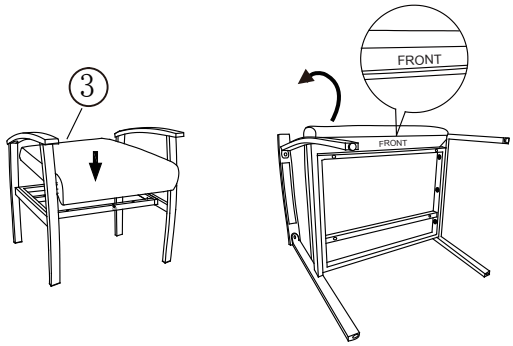


## STEP 3

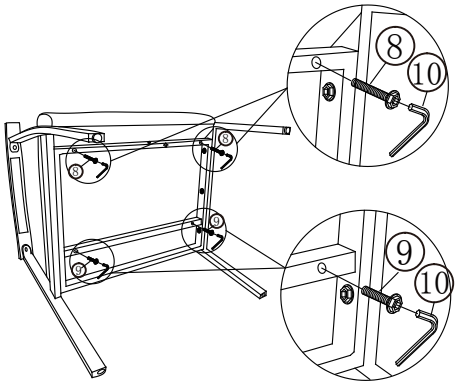


## STEP 4

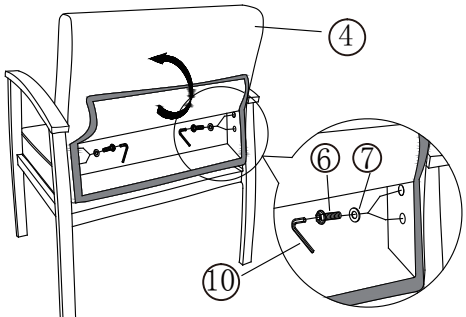


Insert **all screws before fully tightening.**

## STEP 5

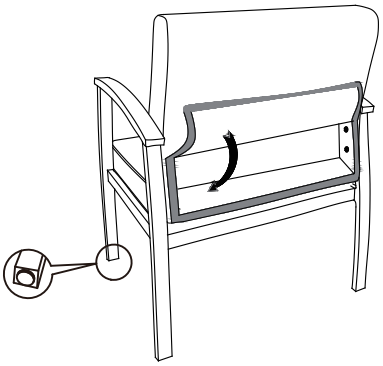

**Turn glides to level chair**

## STEP 6

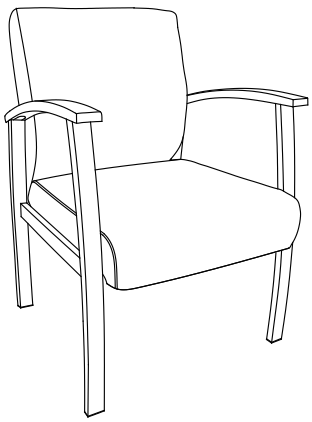

# Quality and Safety Guidelines

*These guidelines apply across seating, tables and desks, storage and shelving, folding and stacking products, classroom and outdoor furniture, and other case goods. Please review this information in addition to the specific assembly instructions included with your product.*

## BEFORE YOU ASSEMBLE

- Unpack all parts and hardware and check them against the parts list before starting assembly.
- Read all instructions and warnings completely before beginning; assemble on a clean, protected surface.
- Use only the tools and hardware specified in the instructions; do not substitute sizes.
- Tighten all hardware securely but do not overtighten, and get a second person to help with large or heavy pieces.

## GENERAL SAFETY & CARE

- Use this product only as intended by the manufacturer; this product is intended for indoor use unless labeled for outdoor/patio use.
- Follow all posted weight capacity limits and usage guidelines provided with the product.
- Do not use the product if any instability, damage, or unusual wear is detected; discontinue use immediately.
- Regularly inspect for loose hardware, worn components, cracks, or other signs of deterioration, and tighten hardware as needed.
- Replace damaged or worn parts only with manufacturer-approved replacement parts.
- Keep children supervised around furniture and any moving components.

## STORAGE, SHELVING & MOVING FURNITURE

- Remove contents before moving storage furniture, cabinets, dressers, desks, or shelving units.
- Use proper lifting technique and adequate assistance when moving heavy items; do not drag, push, or pull furniture unless it is designed for such movement.
- Follow all anti-tip and wall-anchoring instructions when provided, especially for tall or top-heavy pieces.
- Keep fingers, hands, and other body parts clear of hinges, drawer slides, lift mechanisms, and folding or adjustable features.

## SEATING, FOLDING & ADJUSTABLE PRODUCTS

- Sit fully and properly within the seat area; keep chairs stationary when sitting down or standing up, and do not use seating as a ladder or step stool.
- Do not lean excessively backward, forward, or sideways, as this may result in tipping or loss of balance.
- For rocking, reclining, swivel, or height-adjustable products, use only smooth, controlled movements and avoid excessive force.
- For folding and stacking chairs and tables, confirm legs and locking mechanisms are fully extended and secured before each use, and do not exceed recommended stack height limits.

### Warranty & Product Support

For maintenance instructions, replacement parts, warranty information, or product support, please contact **Customer Experience** — Email: customerexperience@theubiquegroup.com | Phone: 866-552-2810.

Additional product information and warranty details can be found at www.theubiquegroup.com.