ASSEMBLY GUIDE
GUIDE D'ASSEMBLAGE
INSTRUCCIONES DE ENSAMBLAJE

FLASHWorkplace

60W Reception Hutch
Tablette de réception 60L
Tablette de réception 60L

196861148132
196861148149

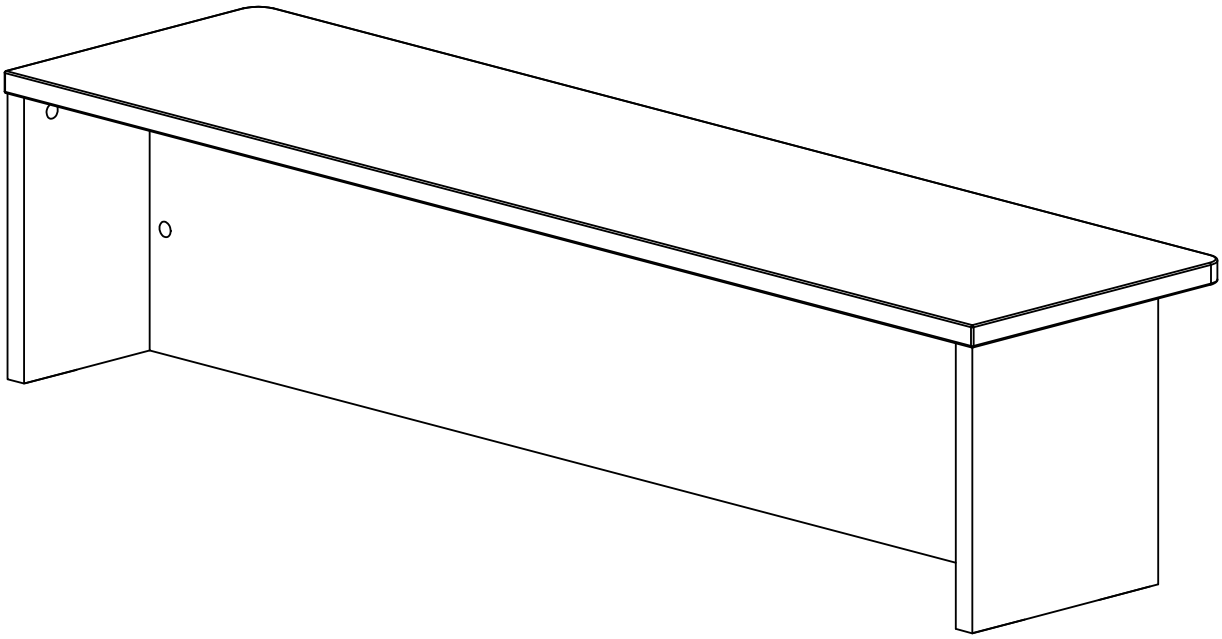

⚠ **NOTE:**
If there are parts missing from your order or if your product was damaged during shipping, PLEASE CONTACT US DIRECTLY.

⚠ **NOTE :**
S'il vous manque des pièces ou si votre meuble a été endommagé pendant le transport, VEUILLEZ NOUS CONTACTER DIRECTEMENT.

⚠ **NOTA:**
En caso de piezas faltantes o si su producto fue dañado durante el envío, POR FAVOR CONTÁCTENOS DIRECTAMENTE.

KEEP MANUAL FOR FUTURE REFERENCE. | CONSERVEZ LE MANUEL POUR RÉFÉRENCE FUTURE. | GUARDE EL MANUAL PARA REFERENCIA FUTURA.

Customer Service Email: CustomerExperience@theubiquegroup.com | Phone: 866-552-2810

Parts - Pièces - Piezas

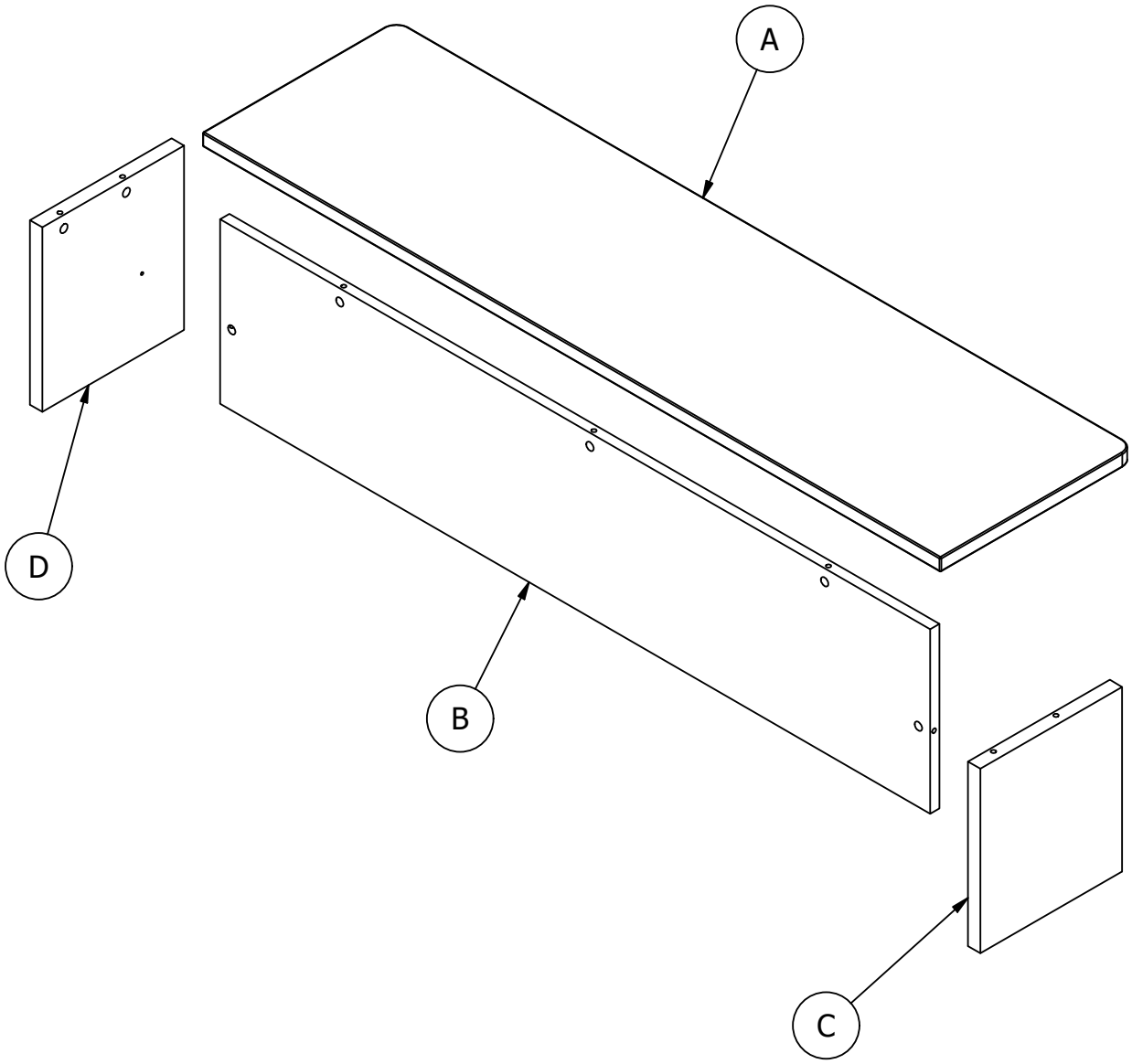

Fasteners - Fixations - Sujetadores

1 [9]

2 [9]

Hardware - Quincaillerie - Quincaillas

3

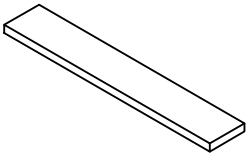

[4]

4

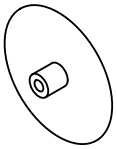

[9]

STEP-ÉTAPE-PASO

1

Prepare - Préparer - Preparar

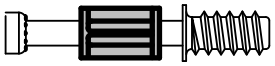

[2]

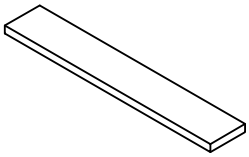

[4]

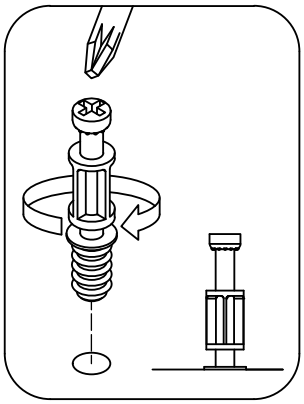

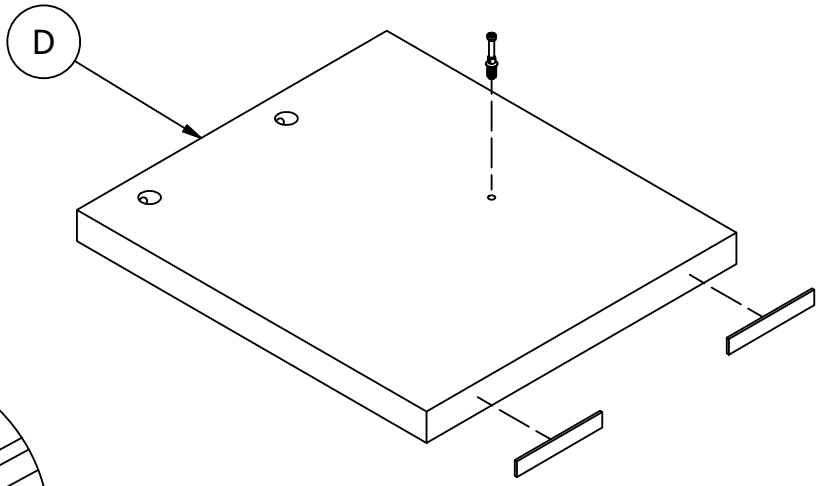

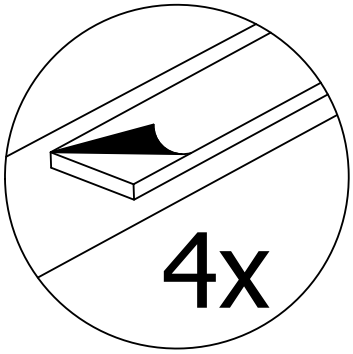

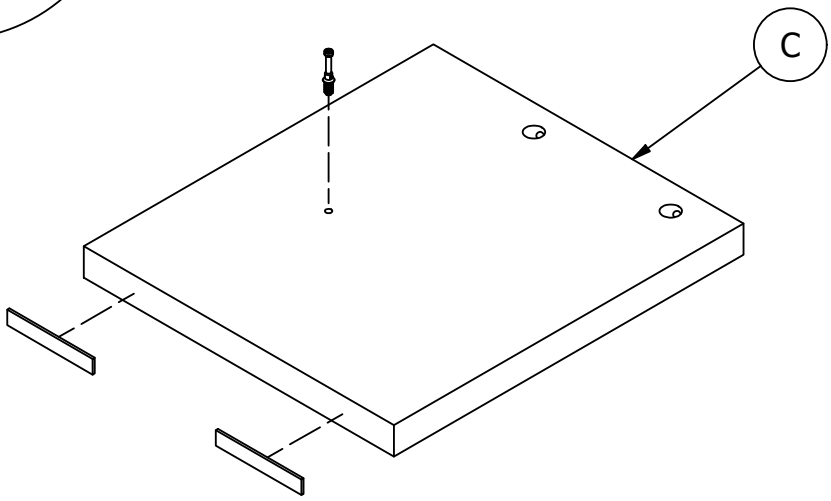

STEP-ÉTAPE-PASO
2

Assemble - Assembler - Assemblar

[2]

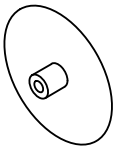

[2]

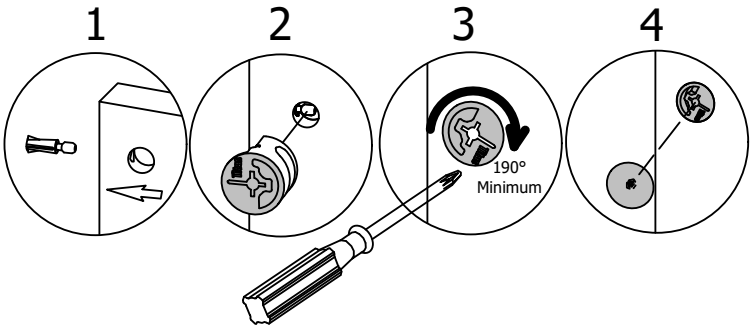

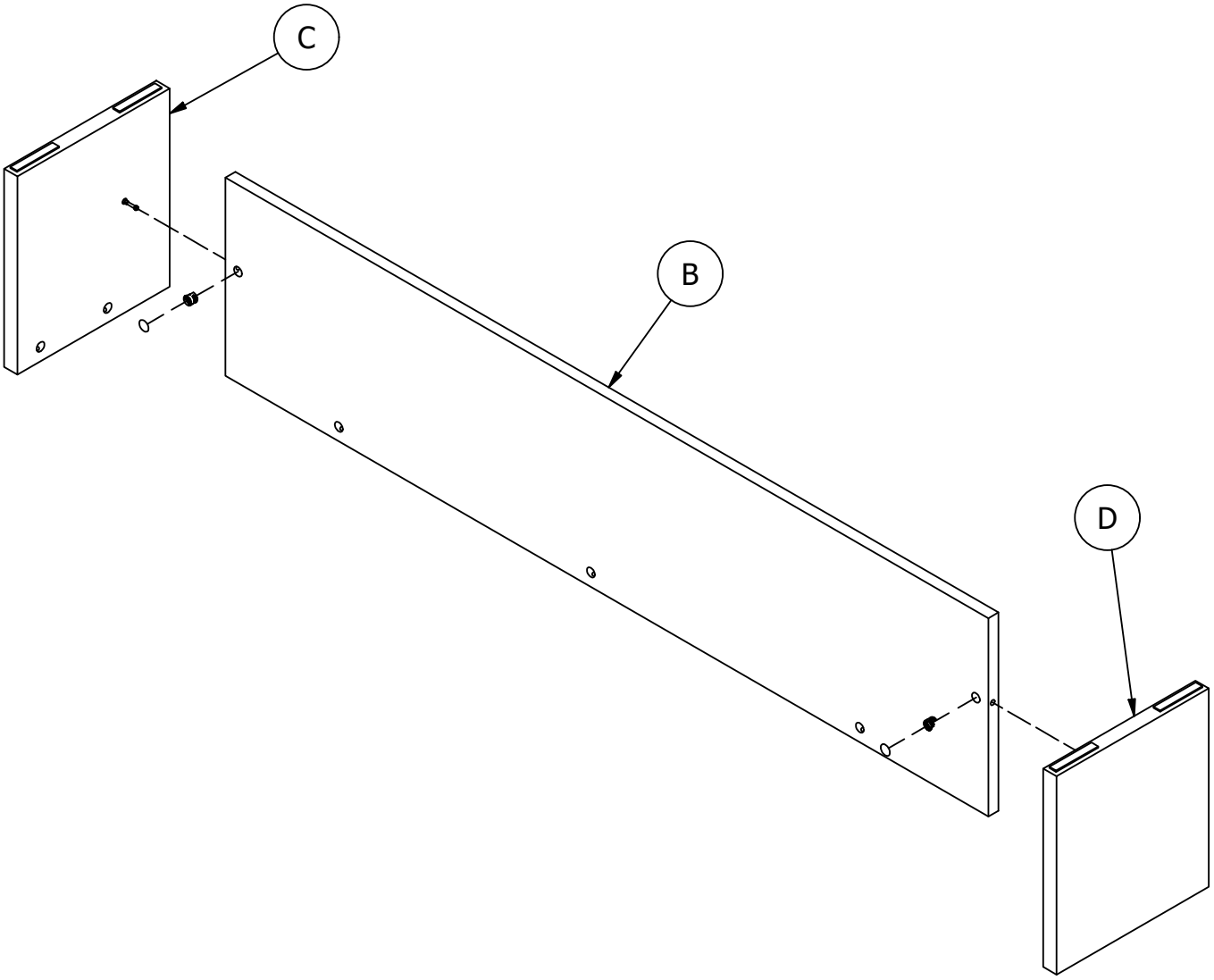

STEP-ÉTAPE-PASO

3

Prepare - Préparer - Preparar

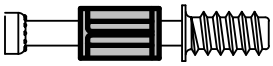

[7]

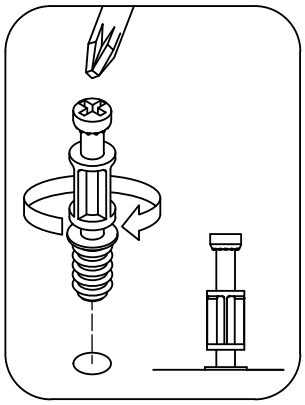

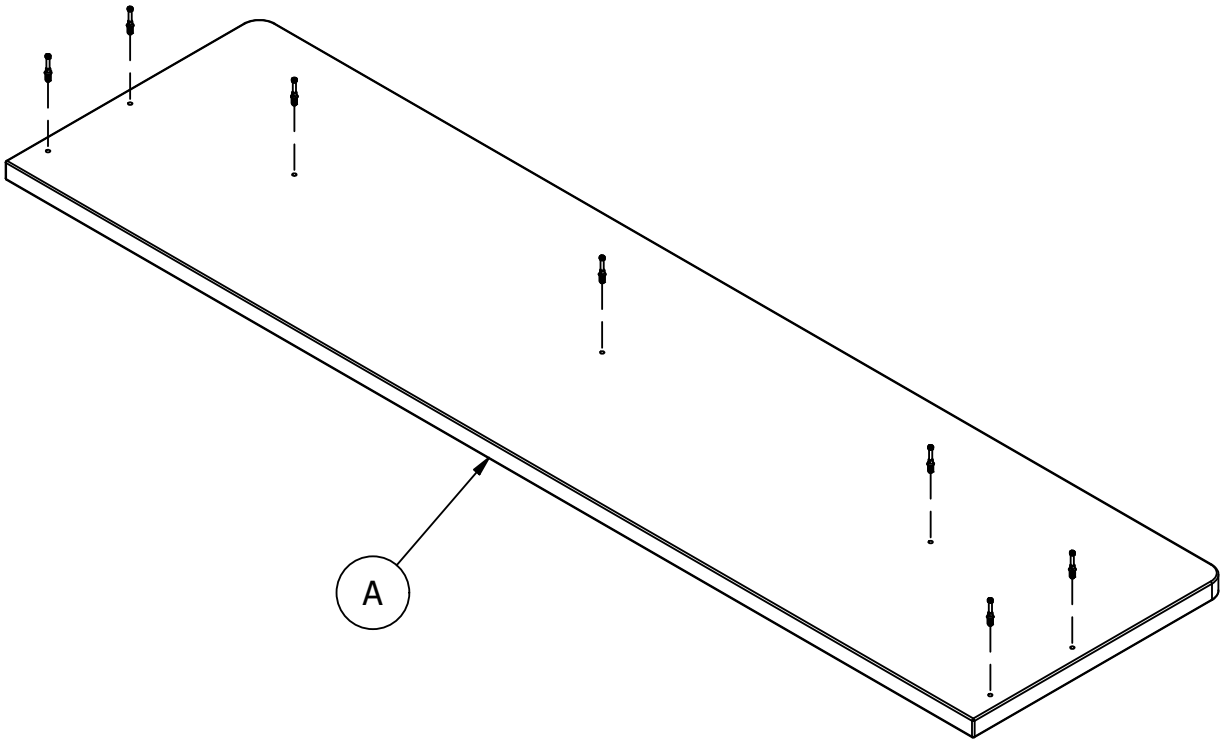

STEP-ÉTAPE-PASO
4

Assemble - Assembler - Assemblar

Team Lift
Esfuerzo de equipo
Effort d'équipe

[7]

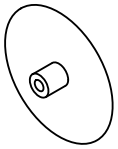

[7]

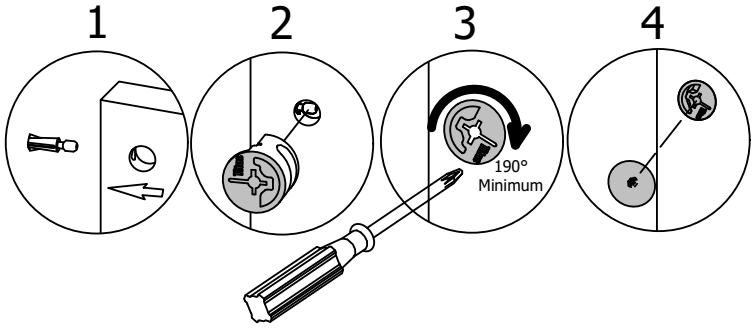

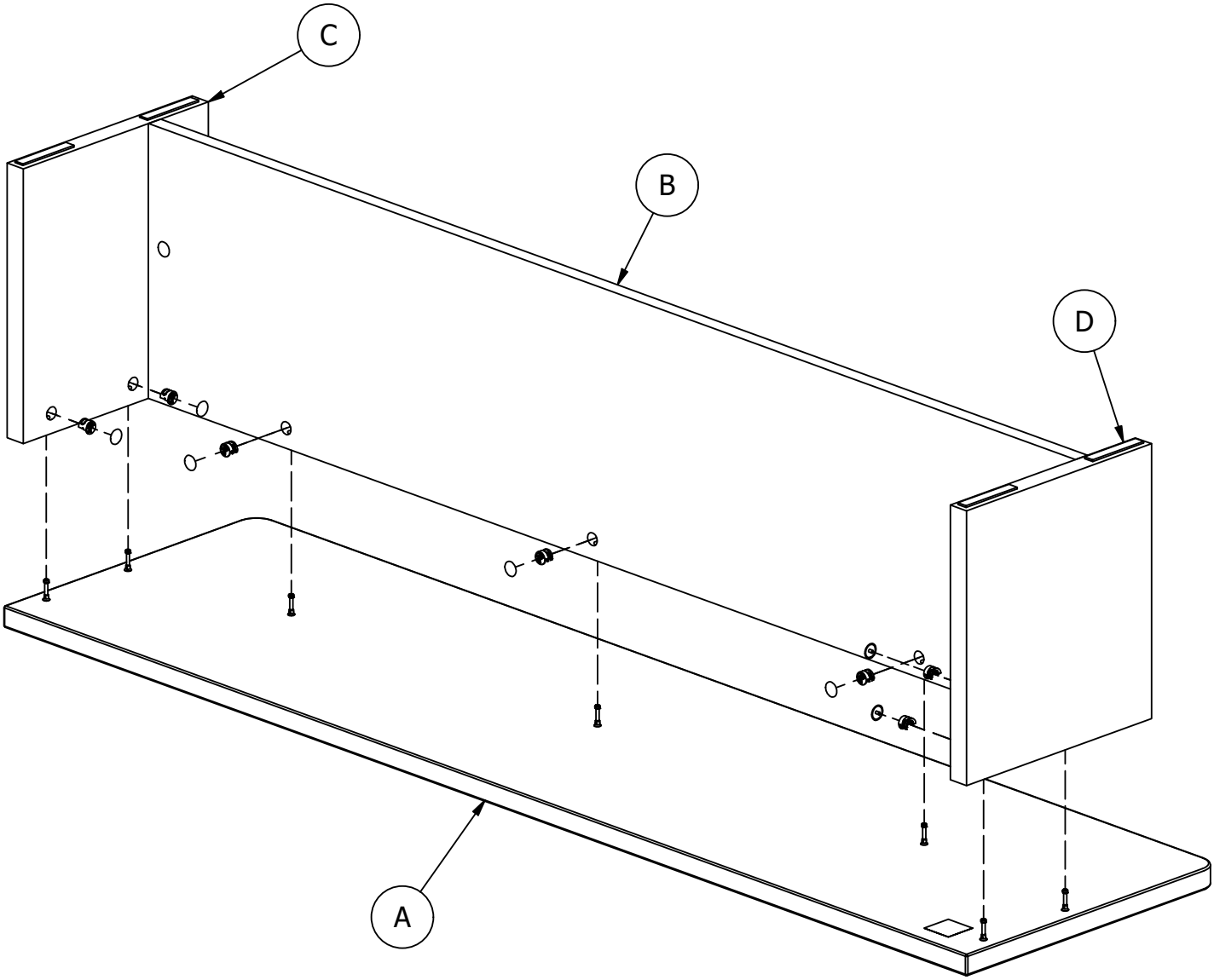

STEP-ÉTAPE-PASO
5

Install - Installer - Instalar

NOTE: hutch can not be repositioned, once set on work surface.

-Clean surface with 50% isopropyl rubbing alcohol.
-Remove release paper.
-Align hutch as shown on next page(s) before setting it on work surface.
-Once hutch is attached, tap firmly with hand to ensure tape makes full contact.

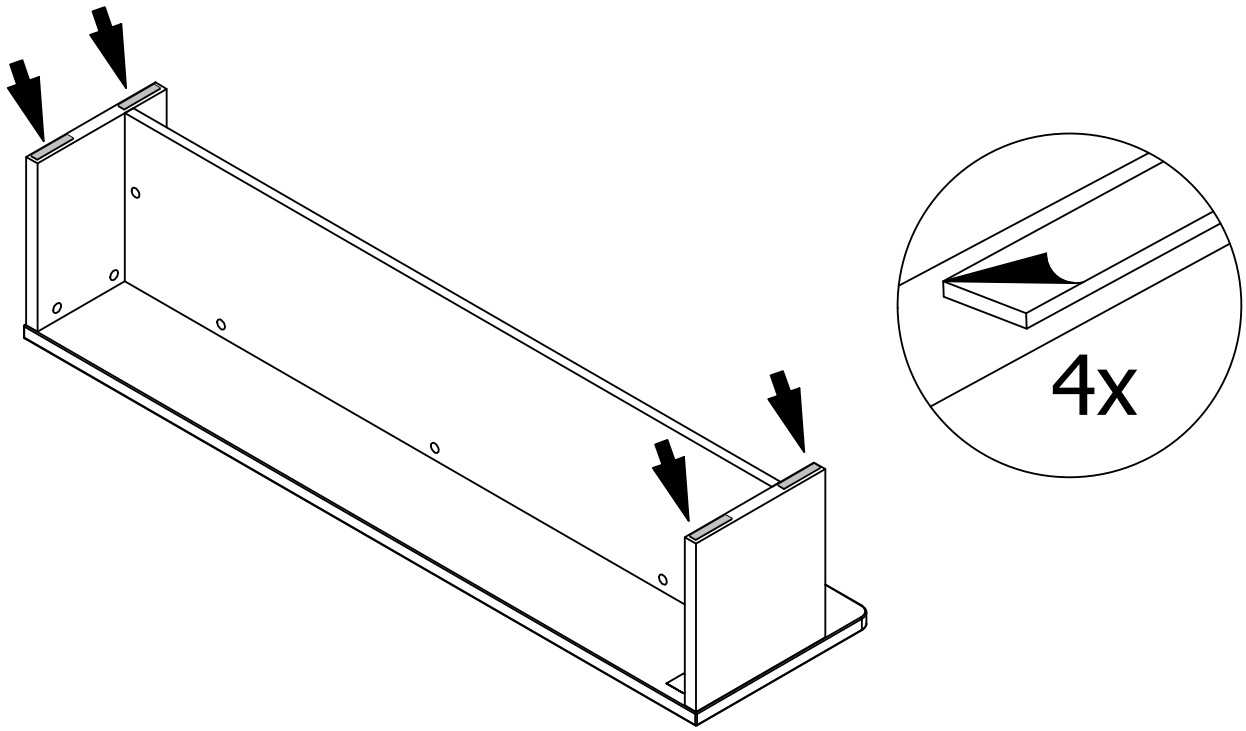

STEP-ÉTAPE-PASO

6

Install - Installer - Instalar

Team Lift
Esfuerzo de equipo
Effort d'équipe

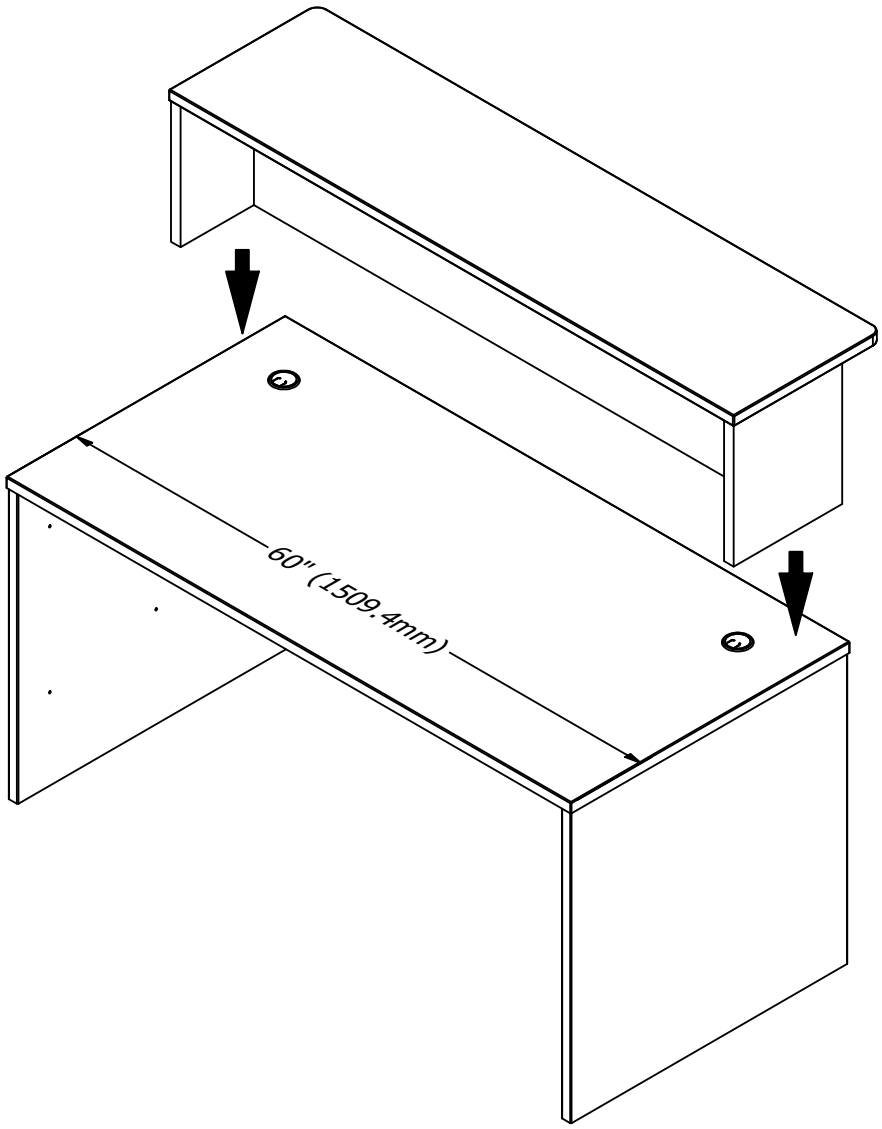

STEP-ÉTAPE-PASO
7

Load - Charge - Carga

Gently clean surfaces with a damp cloth.
Limpie suavemente las superficies con una esponja húmeda.=
Nettoyer délicatement les surfaces à l'aide d'une éponge humide.

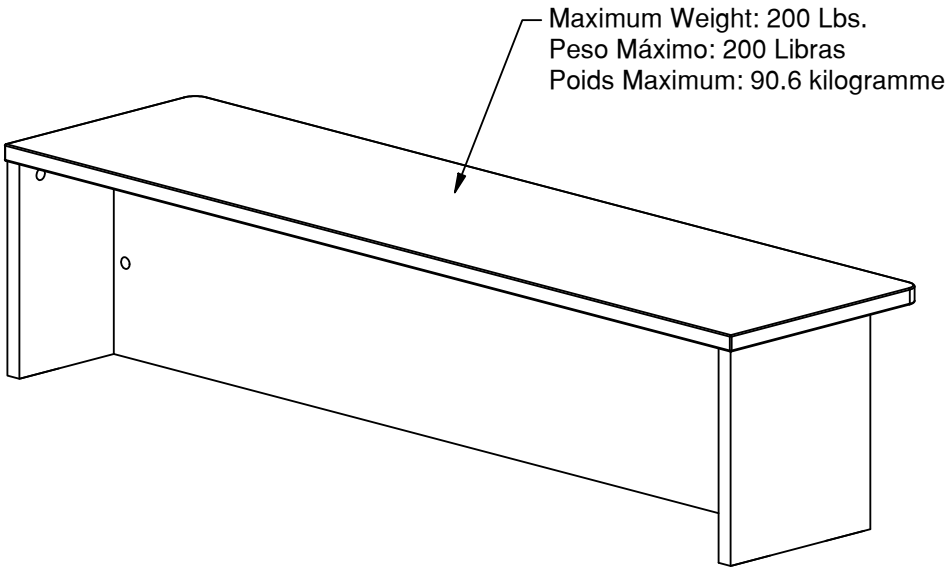

Quality and Safety Guidelines

These guidelines apply across the catalog — seating, tables and desks, storage and shelving, folding and stacking products, classroom and outdoor furniture, and other case goods. Please review this information in addition to the specific assembly instructions included with your product.

BEFORE YOU ASSEMBLE

- Unpack all parts and hardware and check them against the parts list before starting assembly.
- Read all instructions and warnings completely before beginning; assemble on a soft, protected surface.
- Use only the tools and hardware specified in the instructions; do not substitute sizes.
- Tighten all hardware securely but do not overtighten, and get a second person to help with large or heavy pieces.

GENERAL SAFETY & CARE

- Use this product only as intended by the manufacturer; this product is intended for indoor use unless labeled for outdoor/patio use.
- Follow all posted weight capacity limits and usage guidelines provided with the product.
- Do not use the product if any instability, damage, or unusual wear is detected; discontinue use immediately.
- Regularly inspect for loose hardware, worn components, cracks, or other signs of deterioration, and tighten hardware as needed; replace damaged or worn parts only with manufacturer-approved replacement parts.
- Keep children supervised around furniture and any moving components.
- Wipe down surfaces regularly with a soft, clean, lint-free cloth; for most materials, a cloth lightly dampened with mild soap and water is sufficient.
- Avoid harsh chemicals, bleach, ammonia-based cleaners, solvents, and abrasive scrubbers, which can damage finishes, fabric, and hardware.
- Blot spills promptly rather than rubbing, and dry surfaces thoroughly after cleaning; avoid saturating any material with water.
- Keep products out of direct, prolonged sunlight and away from heat sources to help prevent fading, warping, or cracking over time.

STORAGE, SHELVING & MOVING FURNITURE

- Remove contents before moving storage furniture, cabinets, dressers, desks, or shelving units.
- Use proper lifting technique and adequate assistance when moving heavy items; do not drag, push, or pull furniture unless it is designed for such movement.
- Follow all anti-tip and wall-anchoring instructions when provided, especially for tall or top-heavy pieces.
- Keep fingers, hands, and other body parts clear of hinges, drawer slides, lift mechanisms, and folding or adjustable features.

SEATING, FOLDING & ADJUSTABLE PRODUCTS

- Sit fully and properly within the seat area; keep chairs stationary when sitting down or standing up, and do not use seating as a ladder or step stool.
- Do not lean excessively backward, forward, or sideways, as this may result in tipping or loss of balance.
- For rocking, reclining, swivel, or height-adjustable products, use only smooth, controlled movements and avoid excessive force.
- For folding and stacking chairs and tables, confirm legs and locking mechanisms are fully extended and secured before each use, and do not exceed recommended stack height limits.

Warranty & Product Support

For maintenance instructions, replacement parts, warranty information, or product support, please contact **Customer Experience** — Email: customerexperience@theubiquegroup.com | Phone: 866-552-2810.

Additional product information and warranty details can be found at www.theubiquegroup.com.